Product data sheet

Specifications



single phase relay, Harmony Solid State Relays, 75A, panel mount, zero voltage switching, thermal pad, input 3 to 32V DC, output 24 to 300V AC

SSP1A175BDT

Main

Range of product	Harmony Solid State Relays
Provided accessory	Thermal pad
Product or component type	Panel mount relay
Device short name	SSP1
Mounting support	Panel
Number of phases	1 phase
[In] rated current	75 A
Solid state output type	SCR output Zero voltage switching
Output switching mode	Zero voltage switching

Complementary

test button	Without test button
[Uc] control circuit voltage	3...32 V DC
Minimum switching voltage	3 V DC turn-on
Maximum switching voltage	1 V DC turn-off
Response time	0.5 cycle (turn-on) 0.5 cycle (turn-off)
Input current	10 mA at 12 V DC
Output voltage	24...300 V AC
Load current	0.15…75 A
Transient overvoltage	600 V
Surge current	1000 A for 16.6 ms
Maximum I^2t for fusing	4150 $A^2.s$ for 8.33 ms at 60 Hz 4555 $A^2.s$ for 10 ms at 50 Hz
Co-ordination type	Type 1 - 50 A miniature circuit breaker (MCB) - curve B Type 2 - 40 A miniature circuit breaker (MCB) - curve B
Maximum leakage current	1 mA off-state
Maximum voltage drop	<1.15 V on-state
DV/dt	500 V/µs off-state at maximum voltage
Power factor	0.5 (with maximum load)
Motor controller rating	1.5 hp 120 V AC 3 hp 240 V AC

Disclaimer: This documentation is not intended as a substitute for and is not to be used for determining suitability or reliability of these products for specific user applications

Insulation resistance	1000 MOhm at 500 V DC
Maximum capacitance	10 pF for input/output
Dielectric strength	4 kV AC for input/output 4 kV AC for input or output to case
[Uimp] rated impulse withstand voltage	6 kV output to case 6 kV input to output
Tightening torque	1.5...1.7 N.m for input 2...2.2 N.m for output
Connections - terminals	Screw terminals: 0.2...3.3 mm², (24 AWG...12 AWG) with cable end for input Screw terminals: 0.5...5.26 mm², (20 AWG...10 AWG) with cable end for output Screw terminals: 0.2...3.3 mm², (24 AWG...12 AWG) without cable end for input Screw terminals: 0.5...8.26 mm², (20 AWG...8 AWG) without cable end for output Forked type tag connectors: 9.2 x 4 mm for input Ring lugs: 9.2 x 4 mm for input Forked type tag connectors: 11.7 x 4.5 mm for output Ring lugs: 11.7 x 4.5 mm for output
Thermal resistance	0.3 °C/W junction to case
thermal pad impedance	0.48 °C-in²/W at 25 psi
LED indicator	LED, green for input
IP degree of protection	IP20
Safety reliability data	MTTFd = 1875.9 years B10d = 1731395
Net weight	89.2 g
Device presentation	Complete product

Environment

Ambient air temperature for operation	-40…80 °C
Ambient air temperature for storage	-40…125 °C
Pollution degree	2
Overvoltage category	III
Product certifications	CSA EAC CE UL
Marking	CE CSA UL EAC
Standards	CSA C22.2 No 14-13 IEC 62314 IEC 60950-1 UL 508

Packing Units

Unit Type of Package 1	PCE
Number of Units in Package 1	1
Package 1 Height	3.8 cm
Package 1 Width	4.8 cm
Package 1 Length	6.5 cm
Package 1 Weight	100 g
Unit Type of Package 2	S01

Number of Units in Package 2	30
Package 2 Height	15 cm
Package 2 Width	15 cm
Package 2 Length	40 cm
Package 2 Weight	3.35 kg

Contractual warranty

Warranty (in months)	18

Environmental Data

Schneider Electric aims to achieve Net Zero status by 2050 through supply chain partnerships, lower impact materials, and circularity via our ongoing “Use Better, Use Longer, Use Again” campaign to extend product lifetimes and recyclability.

Environmental Data explained >

How we assess product sustainability >

Environmental footprint

Total lifecycle Carbon footprint	**7 828 kg CO2 eq.**
Carbon footprint of the manufacturing phase [A1 to A3]	**1 kg CO2 eq.**
Carbon footprint of the distribution phase [A4]	**0 kg CO2 eq.**
Carbon footprint of the installation phase [A5]	**0 kg CO2 eq.**
Carbon footprint of the use phase [B2, B3, B4, B6]	**7 826 kg CO2 eq.**
Carbon footprint of the end-of-life phase [C1 to C4]	**0 kg CO2 eq.**
Environmental Disclosure	Product Environmental Profile

Use Better

Materials and Substances

Packaging made with recycled cardboard	**Yes**
Packaging without single use plastic	**Yes**
SCIP Number	**134201bc-d293-4667-9cca-10a7f11729e0**
EU RoHS Directive	Compliant By Exemption
REACh Regulation	Reference contains Substances of Very High Concern above the threshold
California proposition 65	**WARNING: This product can expose you to chemicals including: Lead and lead compounds, which is known to the State of California to cause cancer and birth defects or other reproductive harm. For more information go to www.P65Warnings.ca.gov**

Use Again

Repack and remanufacture

Recyclability potential, in %	**56**
End of life manual availability	End of Life Information
Take-back	**No**

Dimensions Drawings

Dimensions

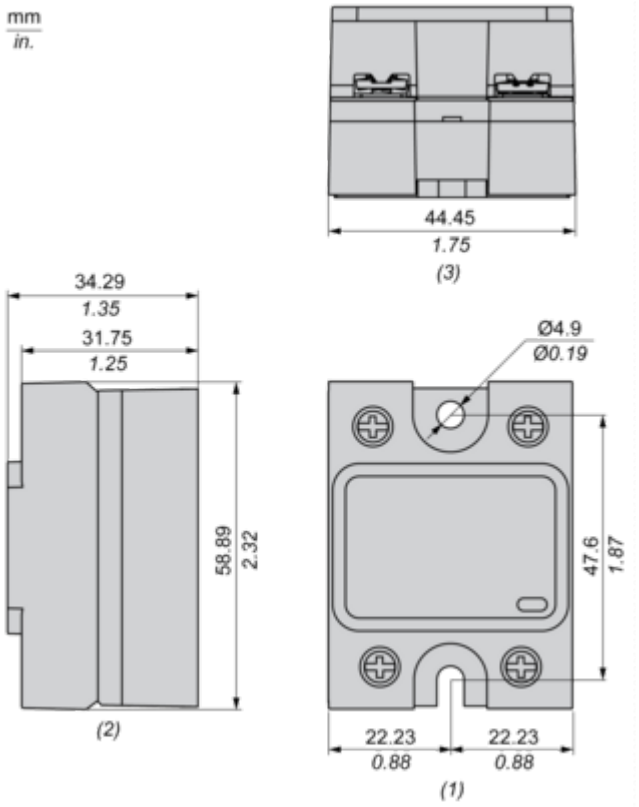

(1) Front view
(2) Side view
(3) Bottom view

Performance Curves

Derating Curves

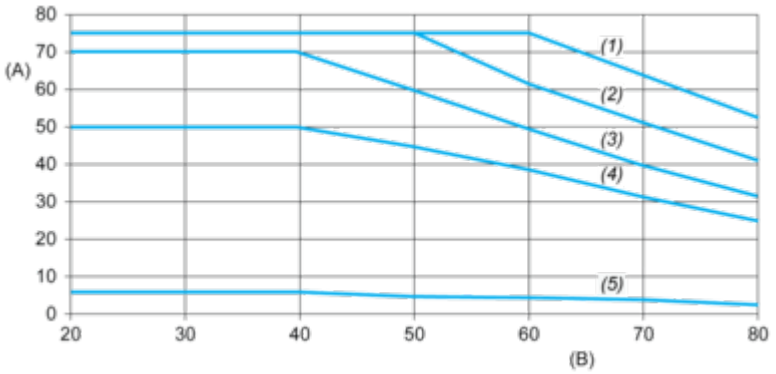

A : Load Current (Arms)
B : Ambient Temperature (°C)
(1) For Heatsink SSRHP02
(2) For Heatsink SSRHP05
(3) For Heatsink SSRHP07
(4) For Heatsink SSRHD10
(5) No Heatsink

Image of product / Alternate images

Alternative





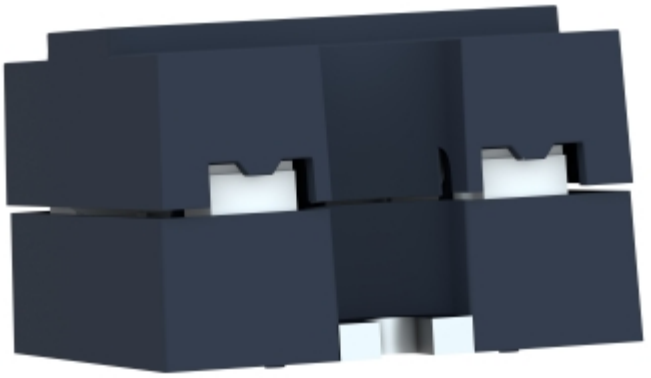


- 1
2 +
Input
Schneider Electric
- 4
3 +



