Product data sheet

Specifications



redundant processor, Modicon M580, 64MB, 61 Ethernet devices, 31 remote IO racks of X80 and Quantum, conformal coating

BMEH586040C

Main

Range of product	Modicon M580
Product or component type	Redundant processor module
Impregnation material	Conformal coated

Complementary

Number of racks	1
Application specific I/O	Serial link Accurate time stamping SSI encoder Motion control HART Counter
Checks	Process control
Control channels	Programmable loops
Integrated connection type	1 Ethernet TCP/IP for service port 2 Ethernet TCP/IP for device network USB type mini B 1 Ethernet for HSBY port
Number of remote I/O station	31 - 2 rack(s) per X80 and Quantum drops
Number of distributed equipment	64
Communication module processor capacity	6 Ethernet communication module 16 AS-Interface module
Communication service	RIO scanner DIO scanner
Memory description	Expandable flash, 4 GB for data storage Integrated RAM, 10 kB for system memory Integrated RAM, 64 MB for program and data Integrated RAM, 4096 kB for HSBY data
Application structure	1 periodic fast task 1 cyclic/periodic master task

Disclaimer: This documentation is not intended as a substitute for and is not to be used for determining suitability or reliability of these products for specific user applications

Cybersecurity	DoS prevention IPSec SNMP logging Syslog protocol support Transport layer security Audit trail Embedded firewall Firmware signature Password protection Port hardening Secure communication (HTTPS) Security log RBAC user management PKI digital certificate authentication Modbus TLS (Modbus Secure Explicit) Centralised certificate management NIS2.0 compliance EU CRA compliance Secure Hot-Standby communication forwarding
Number of instructions per ms	40 Kinst/ms 100 % Boolean 50 Kinst/ms 65 % Boolean + 35 % fixed arithmetic
Current consumption	365 mA at 24 V DC
MTBF reliability	650000 H
Marking	CE

Environment

Vibration resistance	3 gn
Shock resistance	30 gn
Ambient air temperature for operation	-25…60 °C
Ambient air temperature for storage	-40…85 °C
Operating altitude	0...2000 m 2000...5000 m with derating factor
Relative humidity	5…95 % at 55 °C without condensation
IP degree of protection	IP20
Directives	2014/35/EU - low voltage directive 2014/30/EU - electromagnetic compatibility 2014/34/EU - ATEX directive
Product certifications	CE UL CSA RCM EAC Merchant Navy ATEX zone 2/22 IECEx zone 2/22 UKCA
Standards	IEC 61131-2 IEC 61010-2-201 UL 61010-2-201 CSA C22.2 No 61010-2-201 IACS E10 EN/IEC 61000-6-5, interface type 1 and type 2 EN/IEC 61850-3, location G IEC 60079-0
Environmental characteristic	Gas resistant class Gx conforming to ISA S71.04 Gas resistant class 3C4 conforming to IEC 60721-3-3 Dust resistant class 3S4 conforming to IEC 60721-3-3 Sand resistant class 3S4 conforming to IEC 60721-3-3 Salt resistant level 2 conforming to IEC 68252 Mold growth resistant class 3B2 conforming to IEC 60721-3-3 Fungal spore resistant class 3B2 conforming to IEC 60721-3-3 Hazardous location class I division 2

Protective treatment	Conformal coating
Supply	Internal power supply via rack
Status LED	1 LED (green) processor running (RUN) 1 LED (red) processor or system fault (ERR) 1 LED (red) I/O module fault (I/O) 1 LED (green) download in progress (DL) 1 LED (red) memory card or CPU flash fault (BACKUP) 1 LED (green/red) ETH MS (Ethernet port configuration status) 1 LED (green/red) Eth NS (Ethernet network status) 1 LED (green) peer processor running (REMOTE RUN) 1 LED (green) processor ID set to A (A) 1 LED (green) processor ID set to B (B) 1 LED (green) processor acting as Primary (PRIM) 1 LED (green) processor acting as Standby (STBY) 1 LED (green) I/O values overrided by user (FORCED IO) 1 LED (green) Hot standby link status (Hsby Diag)
Net weight	0.849 kg

Packing Units

Unit Type of Package 1	PCE
Number of Units in Package 1	1
Package 1 Height	8.800 cm
Package 1 Width	17.800 cm
Package 1 Length	25.200 cm
Package 1 Weight	891.000 g
Unit Type of Package 2	S03
Number of Units in Package 2	6
Package 2 Height	30.000 cm
Package 2 Width	30.000 cm
Package 2 Length	40.000 cm
Package 2 Weight	5.878 kg

Contractual warranty

Warranty (in months)	18

Environmental Data

Schneider Electric aims to achieve Net Zero status by 2050 through supply chain partnerships, lower impact materials, and circularity via our ongoing “Use Better, Use Longer, Use Again” campaign to extend product lifetimes and recyclability.

Environmental Data explained >

How we assess product sustainability >

Environmental footprint

Total lifecycle Carbon footprint	**290 kg CO2 eq.**
Carbon footprint of the manufacturing phase [A1 to A3]	**65 kg CO2 eq.**
Carbon footprint of the distribution phase [A4]	**0.1 kg CO2 eq.**
Carbon footprint of the installation phase [A5]	**0 kg CO2 eq.**
Carbon footprint of the use phase [B2, B3, B4, B6]	**224 kg CO2 eq.**
Carbon footprint of the end-of-life phase [C1 to C4]	**0.4 kg CO2 eq.**
Environmental Disclosure	**Product Environmental Profile**

Use Better

Materials and Substances

Packaging made with recycled cardboard	**Yes**
Packaging without single use plastic	**No**
SCIP Number	**4eb70ab0-978b-4773-a441-0cc20d6144a1**
EU RoHS Directive	**Compliant By Exemption**
REACh Regulation	**Reference contains Substances of Very High Concern above the threshold**
California proposition 65	**WARNING: This product can expose you to chemicals including: Lead and lead compounds, which is known to the State of California to cause cancer and birth defects or other reproductive harm. For more information go to www.P65Warnings.ca.gov**

Use Again

Repack and remanufacture

End of life manual availability	**End of Life Information**
Take-back	**No**

Dimensions Drawings

CPU Module Only

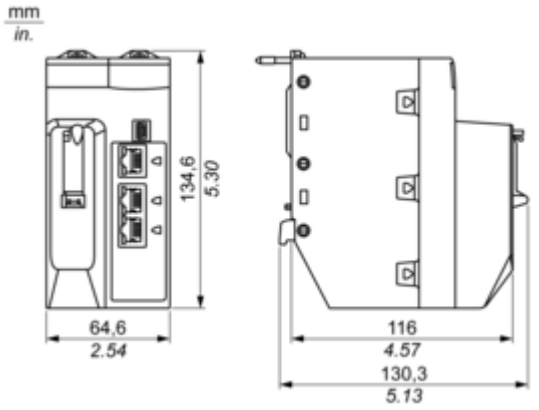

Modules Mounted on Racks

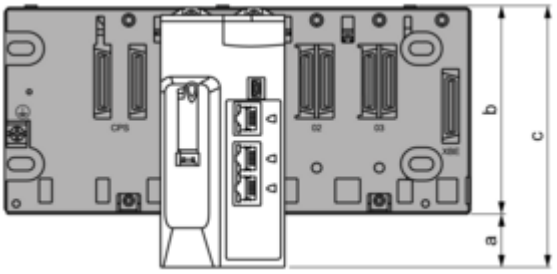

a: additional space below the rack to accommodate the height of the CPU. For an X Bus rack, the value is 30.9 mm (1.217 in.); for an Ethernet rack, the value is 29.49 mm (1.161 in.).
b: the height of the rack. For an X Bus rack, the height is 103.7 mm (4.083 in.); for an Ethernet rack, the height is 105.11 mm (4.138 in.).
c: the height of the main local rack, 134.6 mm (5.299 in.)

Modules and Cables Mounted in an Enclosure

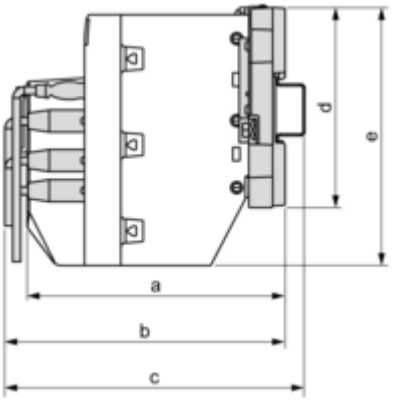

a: enclosure depth: 135 mm (5.315 in.)
b: wiring + module depth: > 146 mm (5.748 in.)
c: wiring + module + DIN rail depth: > 156 mm (6.142 in.)
d: rack height: for an X Bus rack 103.7 mm (4.083 in.); for an Ethernet rack, 105.11 mm (4.138 in.)
e: module height: 134.6 mm (5.299 in.)

Image of product / Alternate images

Alternative






M580





