Premium PLCs TSX P57 / TSX DEY / DSY / DMY

Processors
Discrete I/O

Quick Reference Guide

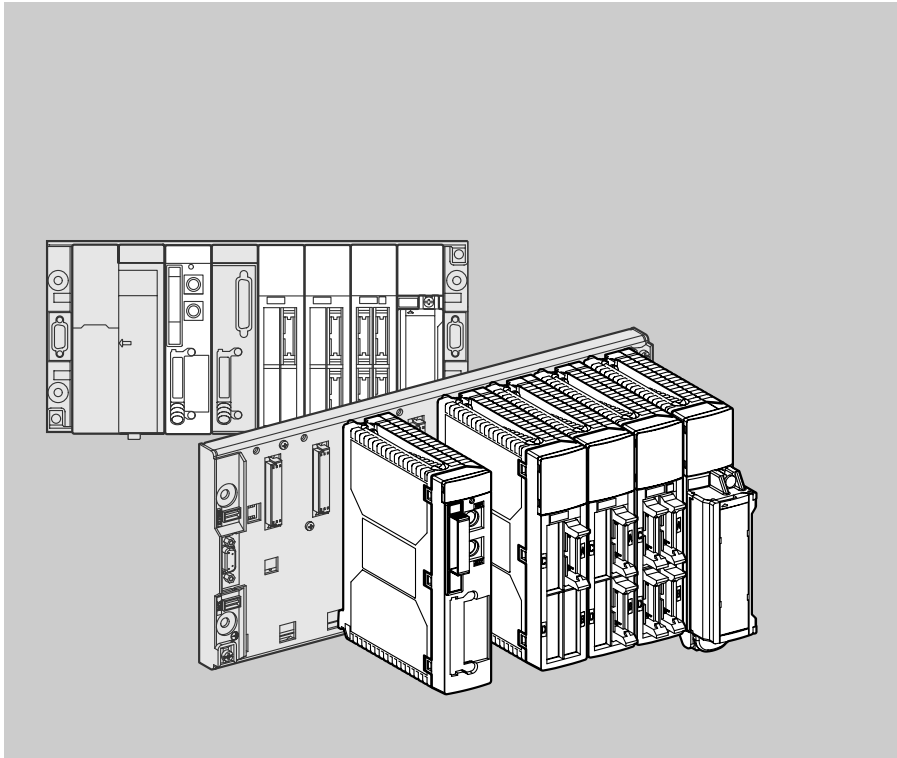

Merlin Gerin
Modicon
Square D
Telemecanique

Schneider Electric

General safety advice for users 2

TSX P57••3/P57••23 Processors 4

At a Glance 4
Physical description 4
Catalog summary 6
Installation / Mounting 7
Precautions to be taken when replacing a processor 8
Auxiliary functions 8
Diagnostics using the indicator lamps 12
Characteristics 13

General introduction to discrete I/O modules 16

Presentation 16
Physical description 16
Catalog 17
Installation / Mounting 19
Functions 19
Connection equipment and wiring rules 22
Characteristics of input modules with terminal blocks 24
Characteristics of input modules with connector(s) 25
Characteristics of output modules with terminal block 26
Characteristics of output modules with connector(s) 28
Characteristics of mixed I/O modules with connectors 29
Maintenance / Diagnostics 30
Operating conditions 31

Discrete I/O module connections 32

Discrete input modules 32
Discrete output modules 36
Discrete mixed I/O module 42

1 General

This manual is intended for personnel technically qualified to install, operate and maintain the products which are described herein. For advanced use of these products please contact your nearest sales office for additional information.

The contents of this manual are not contractual and cannot under any circumstance extend or restrict contract warranty clauses.

2 Qualification of personnel

Only **qualified personnel** are authorized to install, operate or maintain the products. Any work performed by an unqualified person or non-observance of the safety instructions contained in this document or attached to the equipment may jeopardize the safety of personnel and/or cause irreparable damage to equipment.

3 Warnings

Warnings serve to prevent specific risks encountered by personnel and/or equipment. They are indicated in the documentation and on the products by different warning symbols:

Caution

Indicates that not following instructions or ignoring the warning may cause serious personal injury, death and/or serious damage to equipment.

Important or ⚠

Indicates that not following a specific instruction may lead to minor injury and/or damage to equipment.

Comment

Highlights important information relating to the product, its operation or its accompanying documentation.

4 Conformity of use

The products described in this manual **conform to the European Directives** (*) to which they are subject (CE marking). However, they can only be used correctly in the context of the applications for which they are intended (described in the various documents) and when connected to approved third party products.

(*) EMC and LV Directives, concerning Electromagnetic Compatibility and Low Voltage.

5 Installing and setting up equipment

It is important to observe the following rules when installing and starting up equipment. In addition, if the installation includes digital links, it is essential to follow the basic wiring rules, given in the manual "Electromagnetic Compatibility of Industrial Networks and Fieldbuses", **reference TSX DG KBLF**.

- Safety instructions must be followed meticulously. These instructions are in the documentation or on the equipment being installed and set up.
- The type of equipment defines the way in which it should be installed:
  - a flush-mountable device (for example, a process control terminal) must be flushmounted,
  - a device which is to be built in (for example, a PLC) must be placed in a cabinet or enclosure,
  - the casing of a laptop or portable device (for example, a programming terminal or a notebook) must remain closed.

- If the device is permanently connected, its electrical installation must include a device to isolate it from the power supply and a circuit-breaker to protect it against overcurrents and isolation faults. If this is not the case, the power socket must be grounded and be easily accessible.**The device must be connected to the protective ground**.
- If the device is supplied with 24 or 48 VDC, the low voltage circuits must be protected. Only use power supplies which conform to the standards currently in force.
- Check that the supply voltages remain within the tolerance ranges defined in the technical characteristics of the devices.
- All measures must be taken to ensure that any power return (immediate, warm or cold) does not lead to a dangerous state which may place personnel or the installation at risk.
- Emergency stop devices must remain effective in all the device's operating modes, even those which are abnormal (for example, when a wire becomes disconnected). Resetting these devices must not cause uncontrolled or improper restarts.
- Cables which carry signals must be located where they do not cause interference with the control system functions by capacitative, inductive or electromagnetic interference.
- Control system equipment and their control devices must be installed in such as way as to ensure that they are protected against unintentional operation.
- Appropriate safety measures must be taken for the inputs and outputs, to prevent improper states in the control system device, if no signal is received.

6 Equipment operation

The operational safety and availability of a device is its ability to avoid the appearance of faults and to minimize their effects if they occur.

A fault inside the control system is known as:
- Passive, if it results in an open output circuit (no command is sent to the actuators).
- Active, if it results in a closed output circuit (a command is sent to the actuators).

From the point of view of safety, a given fault may or may not be dangerous depending on the type of command given during normal operation. A passive fault is dangerous if the normal command is the operation of an alarm. An active fault is dangerous if it maintains or activates an undesirable command.

The system designer must **use devices external to the PLC** to protect against active faults inside the PLC, whether they are indicated or not.

7 Electrical and thermal characteristics

Details of the electrical and thermal characteristics of devices are given in the associated technical documents (installation manuals, service instructions).

8 Maintenance

Troubleshooting procedure

- Control system equipment should only be repaired by qualified personnel (after-sales service engineer, or technician approved by Schneider Automation SA). Only certified replacement parts or components should be used.
- Before performing any operation on equipment, always cut the power supply off and mechanically lock any moving parts.

Replacement and recycling of used batteries

Use batteries of the same type as the originals and dispose of defective batteries in the same way as toxic waste.

ENGLISH

At a Glance

A wide range of processors, scalable in terms of performance and capacity, are available to meet the different needs of users.

TSX 57 processors can be installed in TSX RKY•• racks:
TSX P57 103, TSX P57 153, TSX P57 203, TSX P57 253, TSX P57 2623, TSX P57 2823, TSX P57 303, TSX P57 353, TSX P57 3623, TSX P57 453 and TSX P57 4823 processors.

TSX processors manage the whole PLC station consisting of discrete input/output modules, analog modules and application-specific modules (counting, axis control, stepper control, communication, etc.) located on one or more racks connected to the X Bus.

Each processor includes :

- a protected internal RAM memory which can take the application program and can be extended by a PCMCIA memory extension card (RAM or FLASH EPROM),
- a realtime clock,
- 2 terminal ports (TER and AUX) for connecting several devices simultaneously (programming terminal, human-machine interface terminal, etc),
- a slot for a PCMCIA communication card (Modbus+, FIPWAY, FIPIO Agent, UNI-TELWAY, serial links),
- a master FIPIO link on TSX P57 •53 and TSX P57 •823 processors,
- an Ethernet link on TSX P57 ••23 processors.

The application program is created using PL7 Junior or PL7 Pro software which offers:

- 4 programming languages,
- a multi-task software structure (master and fast tasks, event processing),
- program modification during execution, etc.

Physical description

TSX P57 103/153

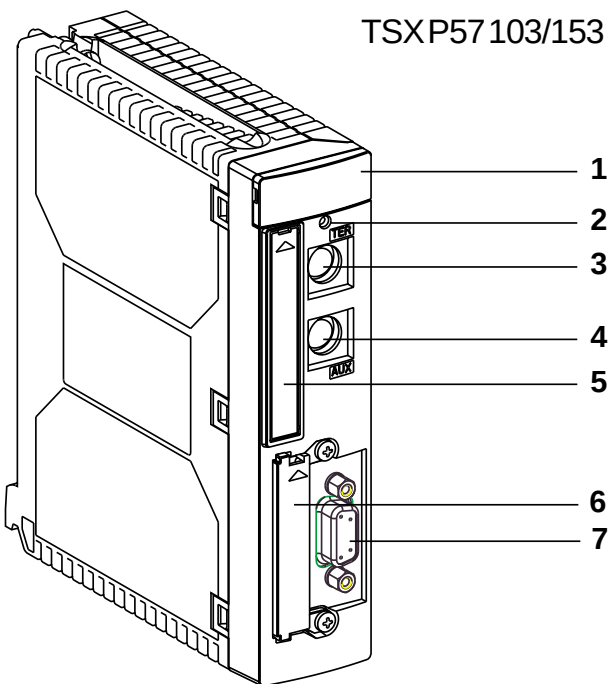

Standard format

TSX P57 203/.../453

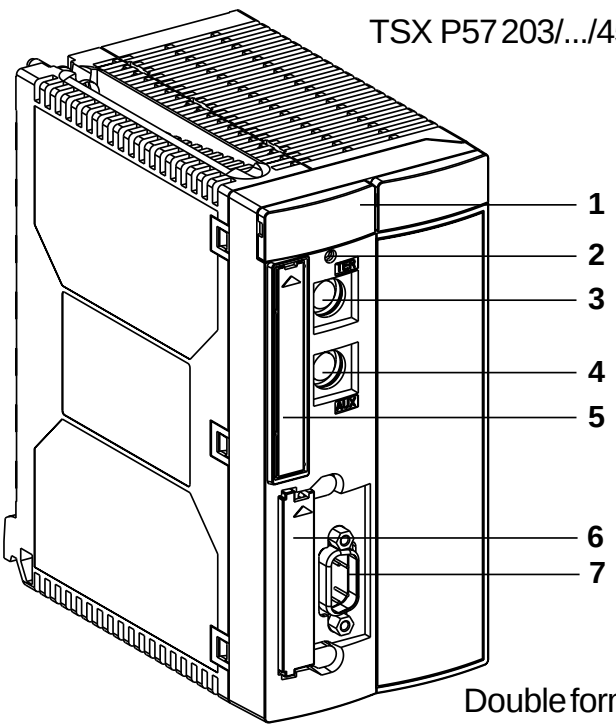

Double format

TSX P57 ••23

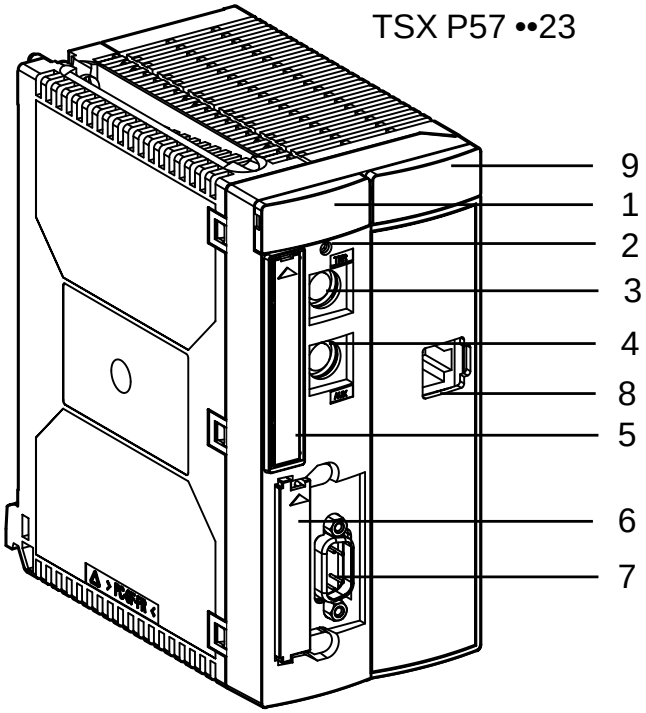

Double format
(with built-in Ethernet link)

1 Display block with 4 or 5 LEDs depending on the model:
- RUN, ERR, I/O, TER LEDs on all processors,
- FIP LED on processors with a built-in master FIPIO link (TSX P57•53 and TSX P57 •823).

2 Pencil-point RESET button which is used to activate a PLC cold restart.

3 Terminal port (TER) for connecting a peripheral which may or may not be self-powered (programming or adjustment terminal, human-machine interface terminal, printer, etc).

4 Human-machine interface port (AUX) for connecting a self-powered peripheral (programming or adjustment terminal, human-machine interface terminal, printer, etc).

5 Slot for a type 1 PCMCIA memory extension card.

⚠ **If no memory card is installed, this slot is fitted with a cover which must be left in place; as removing it will cause the PLC to stop.**

6 Slot for a type 3 PCMCIA communication card for connecting a communication channel to the processor. If no communication card is installed, this slot is fitted with a cover.

7 9-pin SUB D connector for connecting to master FIPIO bus. Connector only featured on TSX P57 •53 and TSX P57 •823 processors.

8 RJ 45 connector for connecting to Ethernet networks. This connector is only featured on TSX P57 ••23 processors.

9 ETY PORT display block with 6 LEDs:
- RUN (green), ERR (red), COL (red), STS (amber), TX (amber) and RX (amber).

Catalog summary

• TSX 57 Processors

References TSX P57		103	153	203/ 2623	253/ 2823	303/ 3623	353	453/ 4823
TSX RKY 12EX racks		2	2	8	8	8	8	8
TSX RKY 4EX/6EX/8EX Racks		4	4	16	16	16	16	16
Module slots (1)		21 [27]	21 [27]	87 [111]	87 [111]	87 [111]	87 [111]	87 [111]
In-rack discrete I/O (2)		512	512	1024	1024	1024	1024	2048
In-rack analog I/O		24	24	80	80	128	128	256
Application-specific channels (3)		8	8	24	24	32	32	64
Process control loops		-	-	30	30	45	45	60
Process control channels		-	-	10	10	15	15	20
Network connection: FIPWAY, ETHWAY/TCP/IP, Modbus + Ethernet (4)		1	1	1	1	3	3	4
Built-in FIPIO connection		-	63	-	127	-	127	127
Third party fieldbus connection		0	0	1	1	2	2	2
AS-i sensor/actuator fieldbus connection		2	2	4	4	8	8	8
Internal memory (5)	(K16)	32	32	48	64	64/80	80/96	96/176
Memory extension	(K16)	64	64	160	160	384	384	512

(1) With standard format modules, except for processor and power supply modules.
21 slots with 2 TSX RKY 12EX racks, 27 slots with 4 TSX RKY 8EX racks,
87 slots with 8 TSX RKY 12EX racks, 111 slots with 16 TSX RKY 8EX racks.

(2) The I/O on the FIPIO bus, the third party bus and AS-i fieldbus are to be counted additionally.

(3) Application-specific channels = counter, axis control, stepper control, communication, etc. (see characteristics section entitled: Number of different application-specific channels).

(4) The built-in Ethernet link on TSX P57 ••23 processors is included in the number of network connections.

(5) On TSX P57 453 and TSX P57 4823: if application is stored in internal RAM, memory capacity = 96 KWords; if application is stored in PCMCIA card, internal RAM capacity = 176 KWords.

Installation / Mounting

- **Installation of a standard format processor module**
  The standard format TSX P57 processor module can be installed in a TSX RKY•• rack in position 00 or 01 depending on the type of power supply module used (standard format or double format):
  - If the rack is fitted with a TSX PSY 1610/2600 standard format power supply module, the processor can be installed in position 00 (by way of preference) or in position 01, in which case position 00 is unavailable.
  - If the rack is fitted with a TSX PSY 3610/5500/ 5520, or 8500 double format power supply module, the processor is installed in position 01.

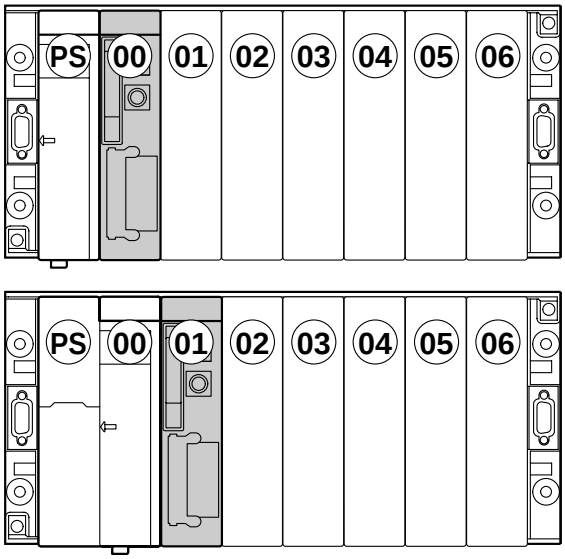

⚠ **The processor module must be mounted on the rack when the rack is POWERED DOWN.**

- **Installation of a double format processor module**
  The double format TSX P57 processor module can be installed in a TSX RKY•• rack in position 00 and 01 or 01 and 02 depending on the type of power supply module used (standard format or double format):
  - If the rack is fitted with a TSX PSY 1610/2600 standard format power supply module, the processor can be installed in position 00 and 01 (by way of preference) or in position 01 and 02, in which case position 00 is unavailable.
  - If the rack is fitted with a TSX PSY 3610/5500/ 5520, or 8500 double format power supply module, the processor is installed in position 01 and 02.

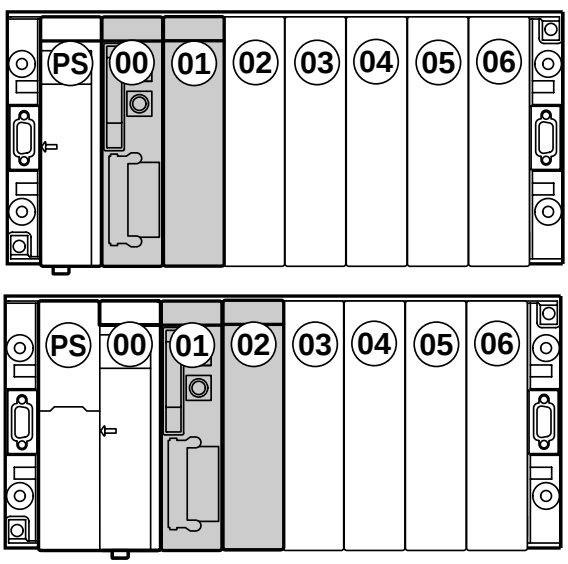

⚠ **The processor module must be mounted on the rack when the rack is POWERED DOWN.**

For inserting modules in the rack, refer to the rack installation instructions.

Precautions to be taken when replacing a processor

⚠ **If a TSX 57 processor is being replaced by another processor which has already been programmed and contains an application, the power to all the PLC station control devices must be cut off.**
Before restoring the power to the control devices, check that the processor contains the required application.

Auxiliary functions

- **Terminal port and auxiliary port**

  Two 8-pin mini-DIN connectors (non-isolated RS 485 link) for connecting the following to these two ports:

  - TER: an FTX-type or PC compatible terminal or for connecting the PLC to a UNI-TELWAY bus, via a TSX P ACC 01 isolation box. This port supplies 5 V power to the peripheral connected to it.
  - AUX: a human-machine interface terminal or printer. This port does not supply 5 V power.

  By default, the “TER” and “AUX” ports offer UNI-TELWAY master communication mode at 19 200 bauds and can be configured for UNI-TELWAY slave mode or ASCII character mode.

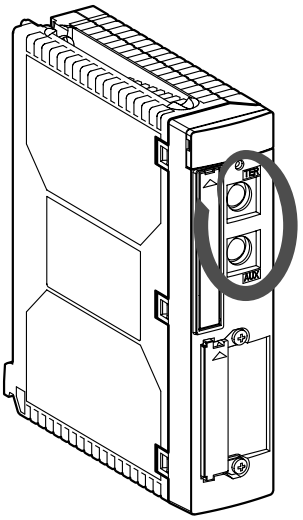

- **Slot for PCMCIA communication card**

  This slot, on the front panel of the processor, can take a type 3 PCMCIA communication card:

  - TSX SCP 111: RS 232 D multiprotocol
  - TSX SCP 112: 20 mA current loop multiprotocol
  - TSX SCP 114: RS 485 multiprotocol, compatible with isolated RS 422
  - TSX MBP 100: Modbus+,
  - TSX FPP 10 / 20: FIPIO Agent / FIPWAY,
  - TSX FPP 200: FIPWAY,
  - TSX MDM 10: Modem,
  - TSX MBP 100: Modbus+,
  - FCS SCP 111: specific protocol on RS 232 support,
  - FCS SCP 114: specific protocol on RS 485 support,
  - TSX CPP 100: CAN OPEN.

⚠ **The processor must always be POWERED DOWN prior to inserting or removing a communication card.**

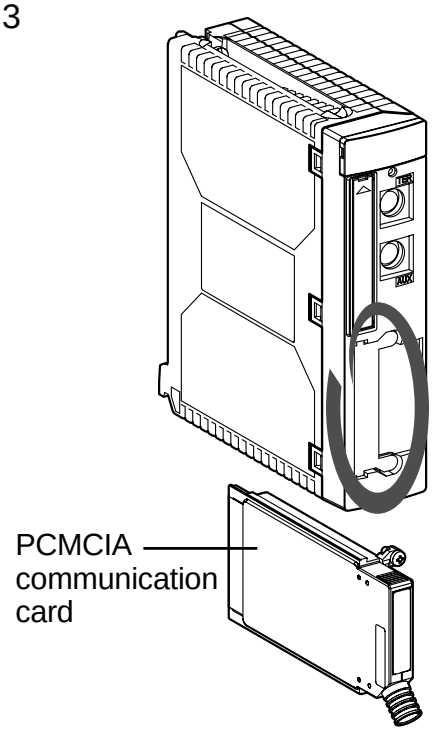

- **Internal RAM**
  This memory takes the application (data, program and constants). Its capacity varies according to the type of processor:
  - 32 KWords on TSX P57 103/153 processor,
  - 48 KWords on TSX P57 203/2623 processors,
  - 64/80 KWords on TSX P57 253/2823/303 processors,
  - 80/96 KWords on TSX P57 353/3623 processors,
  - 96/176 KWords (1) on TSX P57 453/4823 processors.

  If the size of the application is larger than the RAM, the memory can be extended using a PCMCIA memory extension card. In this case, the program and constants are stored in the PCMCIA memory extension card, and data is stored in the internal RAM.

  The internal RAM can be protected using an optional battery (TSX PLP 01), located in the power supply module. **The application is only protected if the power supply and processor modules are kept in the rack.** (See duration of backup of internal RAM.)

  (1) When the application is stored in internal RAM, the memory capacity is limited to 96 KWords. When the application is stored in the PCMCIA card, the memory capacity is extended to 176 KWords.

- **Slot for PCMCIA memory extension card**
  This slot, on the front panel of the processor, can take an optional type 1 PCMCIA memory card. **If no card is installed, the cover must be left in place**.
  4 families of cards are available:
  - **Standard memory cards:** Two types of card are available:
    Protected RAM used during the creation and debugging of the application program. The protection is provided by a removable battery integrated in the card.
    FLASH EPROM used when the application program is operational (debugging completed).
  - **BACKUP type memory card** used for loading the program into the internal RAM, without using a terminal. Such a card needs to be loaded beforehand with the application program which must be < 32 KWords in size.
  - **Application + file type memory cards**
    As well as the conventional application storage zone, these also have:
    - a file zone which can be used to store data by program,
    - a zone which can be used to store the application symbols database. This symbols database is compressed to ensure it remains within the allocated zone without restriction. This zone is only available on some cards.

    Two types of card are available:
    - Protected RAM card,
    - FLASH EPROM + protected RAM card for data storage.

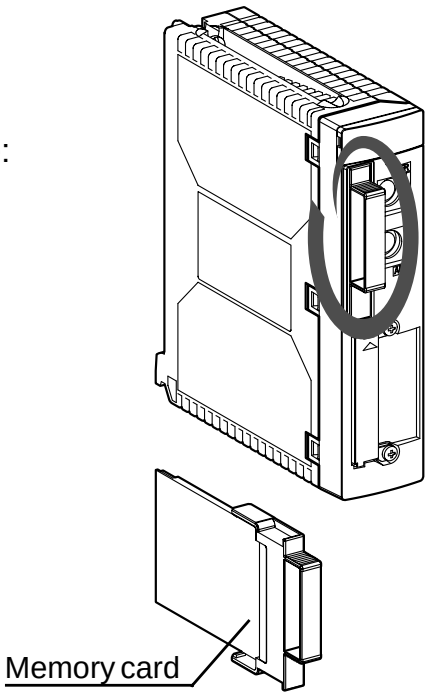

⚠ **A memory card can be inserted/removed while the processor is POWERED UP (causes a cold start). To be operational, a memory card must be fitted with a handle. If the program stored in the PCMCIA memory card includes the AUTO RUN option, the processor will automatically start in RUN after the card is inserted.**

References of standard and backup PCMCIA memory extension cards

References	Type	Capacity	Compatibility with TSX/TPMX processors			
			P57 1•3	P57 2•3 P57 2•23	P57 3•3 P57 3623	P57 453 P57 4823
TSX MRP 032P	RAM	32 K16	Yes	Yes	Yes	Yes
TSX MRP 064P	RAM	64 K16	Yes	Yes	Yes	Yes
TSX MRP 0128P	RAM	128 K16	No	Yes	Yes	Yes
TSX MRP 0256P	RAM	256 K16	No	Yes	Yes	Yes
TSX MFP 032P	FLASH EPROM	32 K16	Yes	Yes	Yes	Yes
TSX MFP 064P	FLASH EPROM	64 K16	Yes	Yes	Yes	Yes
TSX MFP 0128P	FLASH EPROM	128 K16	No	Yes	Yes	Yes
TSX MFP BAK032P	RAM/Backup	32 K16	Yes	Yes	Yes	Yes

References of application + file or symbol memory cards

References	Type / Capacity			Compatible processors			
	Application zone	File zone (RAM)	Symbol zone (RAM)	TSX P57 1•3	TSX P57 2•3 P57 2•23	TSX P57 3•3 P57 3623	TSX P57 453 P574823
TSX MRP 232P	RAM/32 K16	128 K16	-	Yes	Yes	Yes	Yes
TSX MRP 264P	RAM/64 K16	128 K16	-	Yes	Yes	Yes	Yes
TSX MRP 2128P	RAM/128 K16	128 K16	128 K16	No	Yes	Yes	Yes
TSX MRP 3256P	RAM/256 K16	640 K16	128 K16	No	Yes	Yes	Yes
TSX MRP 3384P	RAM/384 K16	640 K16	-	No	Yes	Yes	Yes
TSX MRP 0512P	RAM/512 K16	-	256 K16	No	Yes	Yes	Yes
TSX MFP 232P	Flash/Eprom	128 K16	-	Yes	Yes	Yes	Yes
	32 K16						
TSX MFP 264P	Flash/Eprom	128 K16	-	Yes	Yes	Yes	Yes
	64 K16						

References of file memory cards

References	Type / Capacity	Compatible processors		
	File zone (RAM)	TSX P57 2•3 P57 2•23	TSX P57 3•3 P57 3623	TSX P57 453 P574823
TSX MRP DS 2048 P	2048 K16	Yes	Yes	Yes

- **RESET button**
  Pressing this pencil point pushbutton triggers a cold start of the application:
  - processor operating normally: start in STOP or in RUN depending on the configuration,
  - processor faulty: forced start in STOP.

- **RUN / STOP function**
  This is used to start or stop the application program from a programming terminal or a discrete input defined during configuration. A STOP command from this physical input takes priority over a RUN command from a terminal.

- **Realtime clock**
  The realtime clock built into the processor manages the current date and time and the date and time of the last application stop. This continues even when the processor is powered down, as long as it is mounted on the rack with the power supply module, and fitted with a backup battery.

  ⚠ **Removing the processor will mean the date and time will be lost after a certain amount of time.** (See below).

- **Duration of backup of internal RAM and realtime clock**
  - Duration of battery backup

Ambient temperature when not operating		≤ 30 °C	40 °C	50 °C	60 °C
Backup time	PLC switched off 12 hours/day	5 yrs	3 yrs	2 yrs	1 year
	PLC switched off 1 hour/day	5 yrs	5 yrs	4.5 yrs	4 yrs

  - Standby backup while the battery is being changed (PLC powered down) or the processor or power supply module is being removed. Intervention time is limited; after a certain length of time the data in the RAM memory may be lost.

Ambient temperature when not operating	20 °C	30 °C	40 °C	50 °C
Backup time	2 h	45 mn	20 mn	8 mn

- **Ethernet link on TSX P57 ••23**
  Some processors have a built-in Ethernet link, making it possible to manage 64 TCP connections using the port 502 messaging service, and to scan up to a maximum of 64 devices using the IO Scanning service.

  A RJ45 port located on the second part of the module can be used to connect it to the Ethernet network via an RJ45 connector.

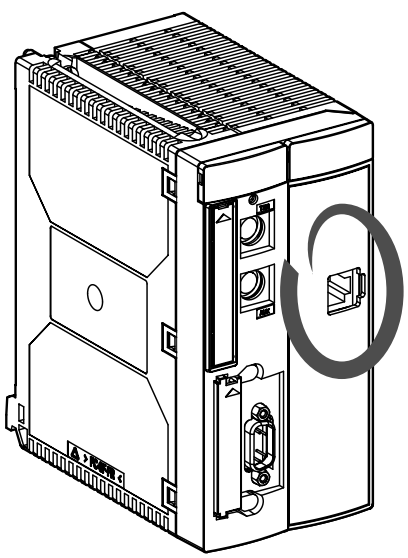

- **Master FIPIO link on TSX P57 •53 and TSX P57 •823 processors**

Some processors have a built-in master FIPIO link which is used to manage a FIPIO bus on which 1 to 127 devices can be connected, such as:

- Momentum and TBX remote I/O modules (discrete and analog),
- CCX 17 operator consoles,
- ATV16 variable speed drives
- Devices which conform to standard profiles, etc.

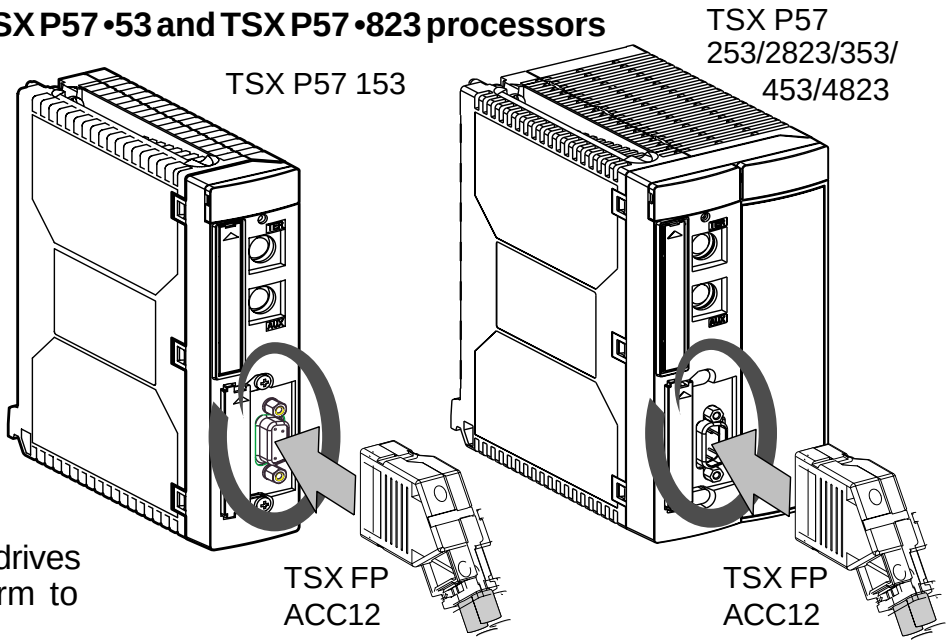

A 9-pin SUB D connector on the front panel is used for connecting to the FIPIO bus via a TSX FP ACC12 connector.

Note: The complete installation of the FIPIO bus (type of architecture, type of cable to use, wiring accessories, etc) is described in the FIPIO bus reference manual.

Diagnostics using the display LEDs

4 or 5 LEDs (depending on the type of processor) located on the front panel can be used to rapidly diagnose the state of the PLC:

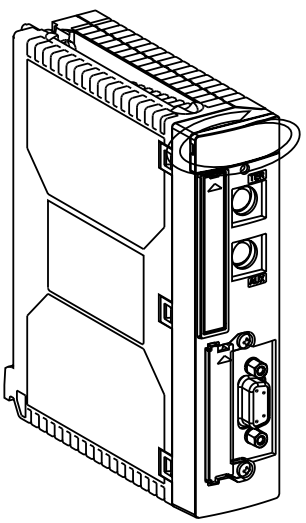

- **RUN** (green): state of the application (**on**: normal operation; **flashing**: PLC stopped or has a blocking software fault;**off**: PLC not configured, application missing, not valid or incompatible with the type of processor, PLC fault or processor or system fault),
- **ERR** (red): processor or memory card or PCMCIA communication card faults (**on**: PLC fault, processor fault or system fault;**flashing**: PLC not configured, application missing, not valid or incompatible with the type of processor, PLC blocking software fault, memory card battery fault, X Bus fault (1);**off**: normal operation),
- **I/O** (red): I/O faults (**on**: I/O fault, from a module or a channel or configuration fault,**flashing**: X Bus fault (1); **off**: normal operation),
- **TER** (amber): this indicates activity on the terminal port (**flashing**: exchange in progress on the terminal port),

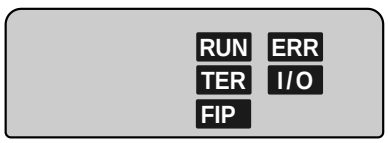

- **FIP** (amber): only on TSX P57 •53 and TSX P57 •823 processors. This indicates activity on the FIPIO bus (**flashing**: exchanges in progress on the FIPIO bus).

(1) A X Bus fault is indicated by simultaneous flashing of the ERR and I/O indicator lamps.

Characteristics

• General characteristics of TSX 57 processors

Processors	TSX P57	103	153	203/ 2623	253/ 2823
Maximum characteristics for the station					
TSX RKY 12EX racks		2	2	8	8
TSX RKY 4EX/6EX/8EX racks		4	4	16	16
Module slots (1)		21 [27]	21 [27]	87 [111]	87 [111]
In-rack discrete I/O on X Bus		512	512	1024	1024
Analog I/O on X Bus		24	24	80	80
Application-specific channels on X Bus (2)		8	8	24	24
Number of process control loops		0	0	30	30
Number of process control channels		0	0	10	10
UNI-TELWAY connection (terminal port)		2	2	2	2
Network connection (3) (FIPWAY, ETHWAY/TCP/IP, Modbus +, Ethernet)		1	1	1	1
Built-in master FIPIO connection		-	63	-	127
Third party fieldbus connection (INTERBUS-S, etc.) (4)		0	0	1	1
AS-i fieldbus connection		2	2	4	4
Functions					
Realtime clock (can be backed up)		Yes	Yes	Yes	Yes
Memory					
Internal RAM (5)	(K16)	32	32	48	64
Extended memory (maximum)	(K16)	64	64	160	160
Maximum memory	(K16)	96	96	208	224
Application structure					
Master task		1	1	1	1
Fast task		1	1	1	1
Event processing (1 event has priority)		32	32	64	64
Execution time for 1K instructions (6)					
Internal RAM		0.95 ms	0.95 ms	0.28 ms	0.28 ms
PCMCIA card		1.18 ms	1.18 ms	0.40 ms	0.40 ms
Programming software (7)		PL7 Junior/PL7 Pro (Windows 95/98/2000 or NT)			
Languages		Ladder, Grafcet, Structured Text, List			

(1) With standard format modules, except for processor and power supply modules.
21 slots with 2 TSX RKY 12EX racks, 27 slots with 4 TSX RKY 8EX racks,
87 slots with 8 TSX RKY 12EX racks, 111 slots with 16 TSX RKY 8EX racks.

(2) application-specific channels = counter, axis control, stepper control, communication channels etc. (See definition and numbers of application-specific channels.)

(3) The built-in Ethernet link on TSX P57 ••23 processors is included in the number of network connections.

(4) INTERBUS-S, PROFIBUS-DP.

(5) Can be backed up by a battery located in the power supply module.

(6) 65% Boolean / 35% Numerical.

(7) PL7 ≥ V4.3 for TSX P57 ••23 processors.

General characteristics of TSX 57 processors (continued)

Processors	TSX P57	303/ 3623	353	453/ 4823
Maximum characteristics for the station				
TSX RKY 12EX racks		8	8	8
TSX RKY 4EX/6EX/8EX racks		16	16	16
Module slots (1)		87 [111]	87 [111]	87 [111]
In-rack discrete I/O on X Bus		1024	1024	2048
Analog I/O on X Bus		128	128	256
Application-specific channels on X Bus (2)		32	32	64
Number of process control loops		45	45	60
Number of process control channels		15	15	20
UNI-TELWAY connection (terminal port)		2	2	2
Network connection (3) (FIPWAY, ETHWAY/TCP/IP, Modbus+, Ethernet)		3	3	4
Built-in master FIPIO connection		-	127	127
Third party fieldbus connection (INTERBUS-S, etc.) (4)		2	2	2
AS-i fieldbus connection		8	8	8
Functions				
Realtime clock (can be backed up)		Yes	Yes	Yes
Memory				
Internal RAM (5)	(K16)	64/80	80/96	96/176
Extended memory (maximum)	(K16)	384	384	512
Maximum memory	(K16)	464	480	688
Application structure				
Master task		1	1	1
Fast task		1	1	1
Event processing (1 event has priority)		64	64	64
Execution time for 1K instructions (6)				
Internal RAM		0.21 ms	0.21 ms	0.11 ms
PCMCIA card		0.32 ms	0.32 ms	0.11 ms
Programming software (7)	PL7 Junior/PL7 Pro (on Windows 95/98/2000 or NT)			
Languages	Ladder, Grafcet, Structured Text, List			

(1) With standard format modules, except for processor and power supply modules.
21 slots with 2 TSX RKY 12EX racks, 27 slots with 4 TSX RKY 8EX racks,
87 slots with 8 TSX RKY 12EX racks, 111 slots with 16 TSX RKY 8EX racks.

(2) Application-specific channels = counter, axis control, stepper control, communication channels, etc., see definition and numbers of application-specific channels.

(3) The built-in Ethernet link on TSX P57 ••23 processors is included in the number of network connections.

(4) INTERBUS-S, PROFIBUS-DP.

(5) Can be backed up by a battery located in the power supply module.
On TSX P57 453: if application is stored in internal RAM, memory capacity = 96 KWords; if application is stored in PCMCIA card, internal RAM capacity = 176 KWords.

(6) 65% Boolean / 35% Numerical.

(7) PL7 ≥ V4.3 for TSX P57 ••23 processors.

• Electrical characteristics

Processors	5 VDC consumption of power supply module TSX PSY •		Dissipated power	
	Typical	Maximum	Typical	Maximum
TSX P57 103	440 mA	610 mA	2.2 W	3.1 W
TSX P57 153	530 mA	740 mA	2.7 W	3.7 W
TSX P57 203	750 mA	1050 mA	3.8 W	5.3 W
TSX P57 2623	1110 mA	1450 mA	5.6 W	7.4 W
TSX P57 253	820 mA	1140 mA	4.1 W	5.7 W
TSX P57 2823	1180 mA	1540 mA	5.9 W	7.8 W
TSX P57 303	1000 mA	1400 mA	5.0 W	7.0 W
TSX P57 3623	1360 mA	1800 mA	6.8 W	9.1 W
TSX P57 353	1060 mA	1480 mA	5.3 W	7.4 W
TSX P57 453	1080 mA	1510 mA	5.4 W	7.6 W
TSX P57 4823	1440 mA	1910 mA	7.2 W	9.7 W

• Number of different application-specific channels

Application		Module/card	App-spec. channel	Number
Counting		TSX CTY 2A	Yes	2
		TSX CTY 2C	Yes	2
		TSX CTY 4A	Yes	4
		TSX CCY 1128	Yes	1
Motion control	Axis	TSX CAY 21/22	Yes	2
		TSX CAY 41/42	Yes	4
		TSX CAY 33	Yes	3
		TSX CSY 84	Yes	32 (1)
	Stepper	TSX CFY 11	Yes	1
		TSX CFY 21	Yes	2
Weighing		TSX ISP Y100/101	Yes	1
Communication	Serial link	TSX SCP 11•• (in processor)	No	0 (2)
		TSX SCP 11•• (in TSX SCY 21601)	Yes	1
		TSX JNP 11•• (in TSX SCY 21601)	Yes	1
		TSX SCY 21601 (built-in channel)	Yes	1
	FIPIO Agent	TSX FPP10 (in processor)	No	0 (2)
	FIPIO Master	built into processor	No	0 (2)
	Modem	TSX MDM10	Yes	1

Note: Only the configured application-specific channels must be included.

(1) 1 channel minimum.
(2) Channels not to be included when calculating the maximum number of application-specific channels supported by the processor.

Presentation

Modularity / Connection	64 I or 64 O	32 I or 32 O	32 I or 28 I/O	16 I
HE 10 connectors	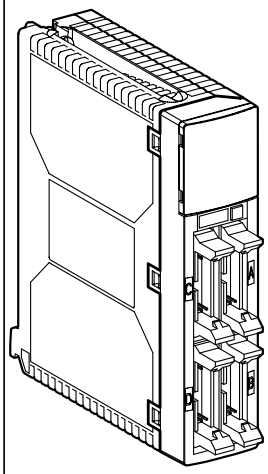	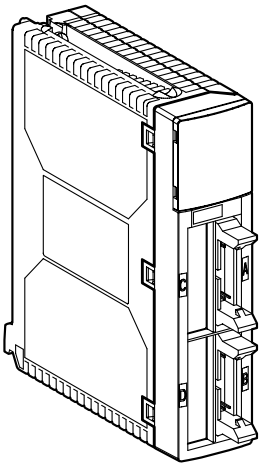	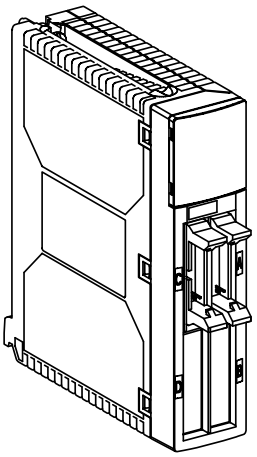	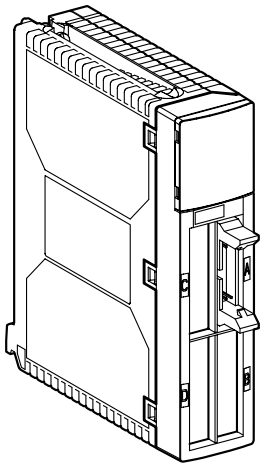
Connection	**64 I or 64 O**	**32 I or 32 O**	**8/16 I or 8/16 O**	**8 or 16 O**
Screw terminal blocks (Terminal blocks not shown)			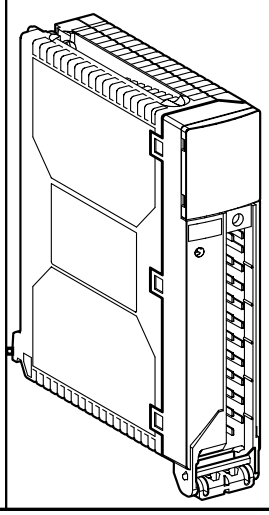	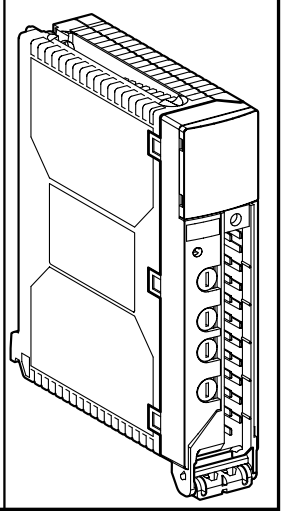

Physical description

Modules with HE 10 connectors

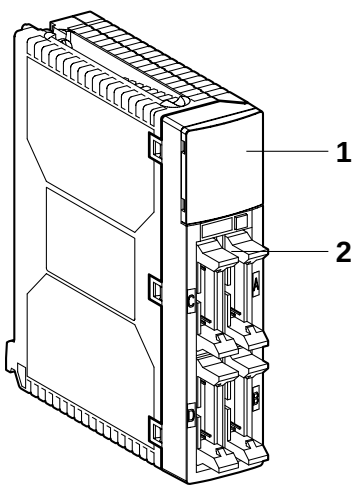

1 Display block

2 HE10 connectors protected by a cover. They enable connection of the sensors and preactuators either directly via preformed cables, or via TELEFAST 2 connection sub-bases.

Modules with connection via screw terminal block

1 Display block.

2 Removable screw terminal block for direct connection of the sensors and preactuators.

3 Door providing access to screw terminals and also acting as a reference label holder.

4 Module locating device.

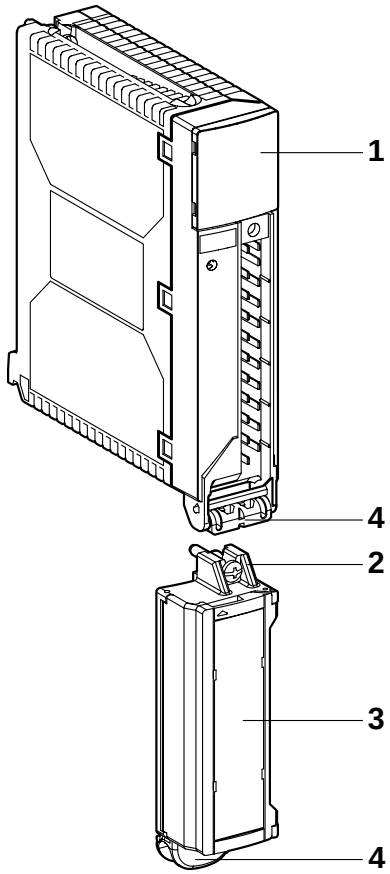

⚠ **The terminal block is supplied separately, under the reference TSX BLY 01.**

- **Reference label**
  This removable label is supplied with the module, to be placed inside the door **(3)**. Printed on both sides, it displays the following information :
  - door closed : module reference and type of channel. In the space provided, the user enters the module address and channel symbols,
  - door open : wiring of inputs and/or outputs, with channel numbers and connection terminal numbers.

Catalog summary

TSX DEY .. input modules

Reference	Modularity	Connect.	Voltage	Isolation	Logic	Filtering	IEC 1131
DEY 08 D2	8 (1)	Ter. block	24 VDC	Yes	Positive	4 ms	Type 2
DEY 16 D2	16 (1)	Ter. block	24 VDC	Yes	Positive	4 ms	Type 2
DEY 16 D3	16 (1)	Ter. block	48 VDC	Yes	Positive	4 ms	Type 2
DEY 16 A2	16 (2)	Ter. block	24 VDC 24 VAC	Yes Yes	Negative –	10 ms 50/60 Hz	– Type 2
DEY 16 A3	16 (2)	Ter. block	48 VAC	Yes	–	50/60 Hz	Type 2
DEY 16 A4	16 (2)	Ter. block	115 VAC	Yes	–	50/60 Hz	Type 2
DEY 16 A5	16 (2)	Ter. block	230 VAC	Yes	–	50/60 Hz	Type 1
DEY 16 FK	16 (3)	HE10	24 VDC	Yes	Positive	0.1..7.5 ms	Type 1
DEY 32 D2K	32 (3)	HE10	24 VDC	Yes	Positive	4 ms	Type 1
DEY 32 D3K	32(1)	HE 10	48 VDC	Yes	Positive	4 ms	Type 2
DEY 64 D2K	64 (3)	HE10	24 VDC	Yes	Positive	4 ms	Type 1

(1) 2 and 3-wire proximity sensor compatibility IEC 947-5-2

(2) 2-wire proximity sensor compatibility IEC 947-5-2 AC

(3) Telemecanique 2 and 3-wire proximity sensor compatibility

TSX DSY .. output modules

Reference (5)	Modularity	Connect.	Voltage	Current	Logic	Protection	Response time
DSY 08 T2	8 (T)	Ter. block	24 VDC	0.5 A	Pos.	Yes (1)	1.2 ms
DSY 08 T22	8 (T)	Ter. block	24 VDC	2 A	Pos.	Yes (1)	0.2 ms
DSY 08 T31	8 (T)	Ter. block	48 VDC	1 A	Pos.	Yes (1)	0.2 ms
DSY 16 T2	16 (T)	Ter. block	24 VAC	0.5 A	Pos.	Yes (1)	1.2 ms
DSY 16 T3	16 (T)	Ter. block	48 VAC	0.5 A	Pos.	Yes (1)	1.2 ms
DSY 08 R5 (3)	8 (R)	Ter. block	24 VDC 24...240 VAC	3 A	–	No	0 v1<8ms 1 v0<10ms
DSY 08 R4D (3)	8 (R)	Ter. block	24...110 VDC	5 A	–	Yes (2)	0 v1<10ms 1 v0<15ms
DSY 08 R5A (3)	8 (R)	Ter. block	24...48 VDC 24...240 VAC	5 A	–	Yes (2)	
DSY 16 R5 (3)	16 (R)	Ter. block	24 VDC 24...240 VAC	3 A	–	No	
DSY 08 S5 (3) (4)	8 (S)	Ter. block	48...220 VAC	2 A	–	Yes (2)	0 v1<10ms 1 v0<10ms
DSY 16 S4 (3) (4)	16 (S)	Ter. block	24...110 VAC	1 A	–	No	
DSY 16 S5	16 (S)	Ter. block	48...220 VAC	1 A	–	Yes (2)	
DSY 32 T2K	32 (T)	HE10	24 VDC	0.1 A	Pos.	Yes (1)	1.2 ms
DSY 64 T2K	64 (T)	HE10	24 VDC	0.1 A	Pos.	Yes (1)	1.2 ms

(1) Outputs have an integrated device for protection against short-circuits and overloads. Modules are protected against polarity inversions.
(2) Outputs are protected by interchangeable fuses, accessed via the module front panel.
(3) A device automatically cuts off the outputs when the terminal block is unlocked.
(4) The output fallback can be configured for all modules, with the exception of triac output modules.
(5) All outputs are isolated.
(T) Transistor outputs (R) Relay outputs (S) Triac outputs

TSX DMY 28FK/28RFK mixed I/O module

Modularity	Connect.	Voltage	Current	Logic	Protection	Filtering	Response time	IEC 1131
16 inputs	HE 10	24 VDC	-	Pos.	-	0.1..7.5 ms	-	Type 1
12 outputs (T)	HE 10	24 VDC	0.5 A	Pos.	Yes	-	0.5 ms	Yes

Note : Outputs have an integrated device for protection against short-circuits and overloads. Modules are protected against polarity inversions.
All inputs and outputs are isolated.
(T) Transistor outputs

Installation / Mounting

Discrete I/O modules can be positioned anywhere on a TSX RKY ... rack.

For inserting modules in the rack, refer to the rack installation instructions.

⚠ **Modules can be inserted in and removed from the rack when the rack is powered up; however, the sensor and preactuator supply must be off and the terminal block disconnected.**

Functions

Current generator inputs

24 VDC and 48 VDC inputs are "current generator" type. Although the input voltage may be higher than 11 V (for 24 VDC inputs) or 20 V (for 48 VDC inputs), the input current is constant.

Protecting DC solid state outputs

All protected solid state outputs have a device which detects the appearance of an overload or a short-circuit when an output is active. Any such fault deactivates the output (tripping) and the fault is signalled (the indicator lamp of the faulty channel flashes and the processor I/O indicator lights up). To use an output after tripping, it must be reactivated.

Reactivating outputs

Reactivation of a tripped output can be automatic or controlled depending on the option selected during configuration. Reactivation is required for solid state DC outputs or for relay and triac outputs protected by interchangeable fuses. It is performed on groups of 8 channels, but has no effect on channels which have not been activated or are not faulty.

- If reactivation is automatic, it is executed every 10 s by the module, until the fault disappears, enabling it to be taken into account.
- If reactivation is controlled by the application program or via an operator terminal, it will be taken into account if the fault has disappeared. The minimum time between two reactivations is 10 s.

Output fallback

On a blocking fault, all module outputs are set to a state determined by the user during configuration : maintain state, fallback to 0 or fallback to 1.

Sharing I/O

Each module is split functionally into groups of 8 channels which may be assigned to the various application tasks (for example, for a module with 16 channels, channels 0 to 7 can be assigned to the MAST task and channels 8 to 15 to the FAST task).
Channels of the same group have common operating modes and function management (fallback and reactivation of outputs).

Programmable input filtering

TSX DEY 16FK and TSX DMY 28FK/28RFK modules configure the input filter time between 0 and 7.5 ms (4 ms by default).

⚠ To avoid taking account of bounce when mechanical contacts are closed, it is advisable to use a filter time greater than 3 ms.

Latching
By means of latching, TSX DEY 16FK and TSX DMY 28 FK modules can use very short pulses which have a shorter duration than the PLC scan time. The change in the input state is taken into account so that it can be processed in the next task scan.

⚠ The time between the arrival of 2 pulses on the same input must be at least equal to the time of 2 PLC scans.
The minimum duration of the pulse should be greater than the filter time configured.

Event management
TSX DEY 16FK and TSX DMY 28FK modules allow up to 16 inputs to be configured, enabling events to be taken into account and processed immediately by the processor (processing on an interrupt).

Monitoring the presence of the terminal block
All terminal block modules have a device which checks that the terminal block is on the module. A fault is signalled if the terminal block is missing or if it is not properly attached to the module.

Monitoring short-circuits and overloads
Solid state output modules have a facility which monitor the state of the load. A short-circuit or overload at one or more outputs causes a fault to appear and the relevant outputs to trip.

Monitoring sensor voltage
All input modules include a facility for monitoring that the sensor and module supply voltage is sufficient to ensure correct operation of the input channels. If this voltage drops below a defined threshold, a fault is signalled.

⚠ The sensor supply must be protected by a 0.5 A fast blow fuse.

Monitoring preactuator voltage
All solid state output modules include a facility for monitoring that the preactuator and module supply voltage is sufficient to ensure correct operation of the output channels. If this voltage falls below a defined threshold, a fault is signalled.

Reflex and timer functions on the TSX DMY 28RFK module
This module can be used to implement applications which require a faster response time than the FAST task or event processing (<500 ms) by means of automation functions executed at module level, independently of the PLC task, and use the following as input variables :
- the physical inputs of the module (%I),
- the output commands of the module (%Q),
- the channel or module fault data,
- the states of the module physical outputs.

These functions are programmed in configuration mode using PL7 Junior or PL7 Pro software V ≥ 3.3. The configuration screen for each output comprises two main parts :
- one part representing a simplified Ladder rung layout comprising 4 lines of 4 contacts which can be used to execute a combinational logic function for the input variables ,
- one part representing the function used which can either be direct control of the output using the configured combinational logic, or a function block.
  (see examples overleaf).

Examples

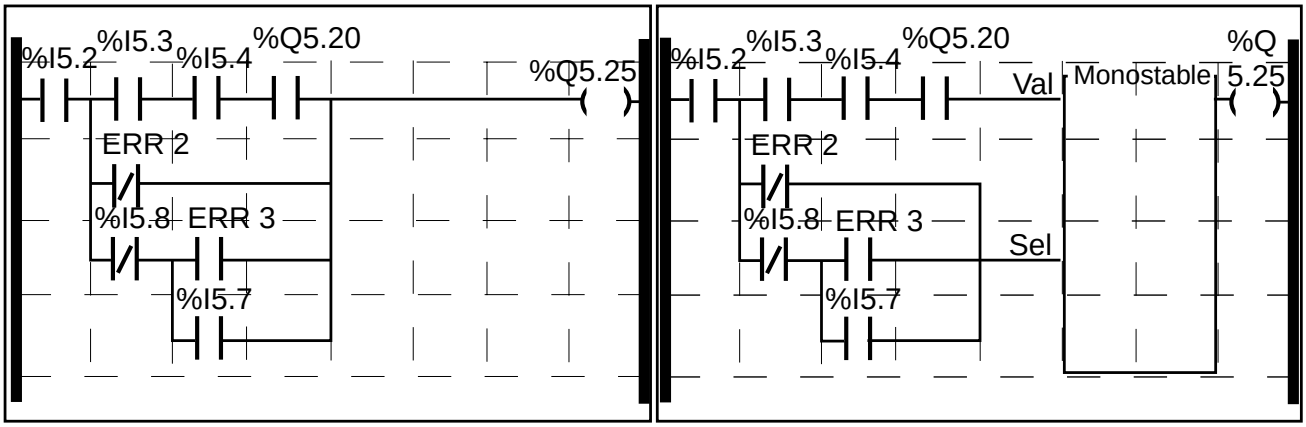

List of the main function blocks :

- on-delay type timer function block,
- off-delay type timer function block,
- on-delay/off-delay type timer function block,
- 2-value timer function block,
- selectable on-delay/off-delay timer function block,
- retriggerable monostable function block,
- time-delayed non-retriggerable monostable function block,
- 2-value monostable function block,
- oscillator function block,
- Dual threshold counter function block,
- single threshold counter with monostable function block,
- interval counter function block used to measure time or length,
- Burst function block used to generate a defined number of oscillator periods,
- PWM function block used to generate a continuous oscillation with a fixed frequency but a variable cyclic ratio,
- slow speed detection function block,
- speed monitoring function block,
- command/control function blocks used to control an action and to check that it has been executed correctly after a certain period of time :
  - type 1command/control function block : (1 command),
  - type 2command/control function block : (2 commands : FWD and REV),
- command function block for a number of counting points (simple position control),
- fault indication function block,
- D latch function block, memorisazion of edge,
- T latch function block, division by 2.

A more detailed description of the various function blocks and their installation using software can be found in the application-specific manual TLS DS 57 PL7 33E - Volume 1 - part B).

Connection equipment and wiring rules

Wiring rules

- **External power supplies for sensors and preactuators**
  These power supplies must be protected against shorts-circuits and overloads, by **fast blow fuses**.

⚠ **If the 24 VDC installation does not conform to SELV (Safety Extra Low Voltage) standards, the 0 V of the power supply must be connected to the protective ground, which should be taken to ground as near as possible to the power supply unit.**

- **Inputs**
  The use of a TSX DEY 16FK/DMY 28FK fast input module requires the input filter time to be adapted to the desired function : use of sensors with mechanical contact outputs requires a filter time of ≥3 ms. In order to achieve faster operation, use DC inputs and sensors which have a response time less than that of AC inputs.
- **Outputs**
  For high currents, it is advisable to segment the terminal connections by protecting each one with a fast blow fuse.
  Use wire of a sufficient cross section to avoid voltage drops and temperature rises.
- **Cable routing**
  In order to limit the AC coupling, separate the power cables (power supply, power contactors, etc) and input (sensors) and output (preactuators) cables.

Connection of modules with screw terminal block

Each terminal can accept bare wires or wires fitted with cable ends, or open lugs.

- minimum : 1 wire, 0.2 mm^2 (AWG 24) without cable end.
- maximum : 1 wire, 2 mm^2 without cable end or
  1 wire, 1.5 mm^2 with cable end

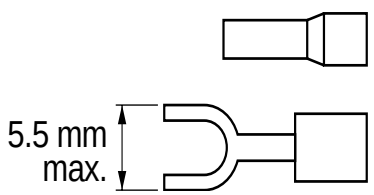

Connection of modules with HE10 connectors

- **20-wire preformed cable, 22 gauge (0.34 mm^2)**
  Used for wire-to-wire connection of I/O to sensors, preactuators or connection terminals.
  There are 2 product references : **TSX CDP 301** (3 meters) and **TSX CDP 501** (5 meters).

Terminal / Wire		Terminal / Wire	
1	white	2	brown
3	green	4	yellow
5	gray	6	pink
7	blue	8	red
9	black	10	purple
11	gray-pink	12	red-blue
13	white-green	14	brown-green
15	white-yellow	16	yellow-brown
17	white-gray	18	gray-brown
19	white-pink	20	pink-brown

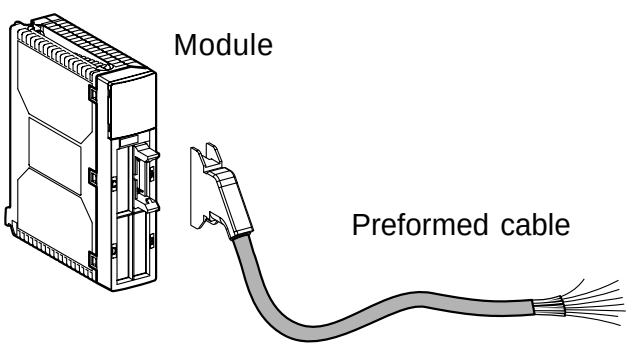

- **Preformed stranded connection cable with sheath, 28 gauge (0.08 mm²)**
  Used to connect I/O to TELEFAST 2 rapid wiring connection and adaptation interfaces. Bearing in mind the small cross section of the wires, it is recommended that the connection cable is only used for low current inputs or outputs (≤100 mA).

  There are 3 product references :

  TSX CDP 102 (1 meter), **TSX CDP 202** (2 meters) and **TSX CDP 302** (3 meters).

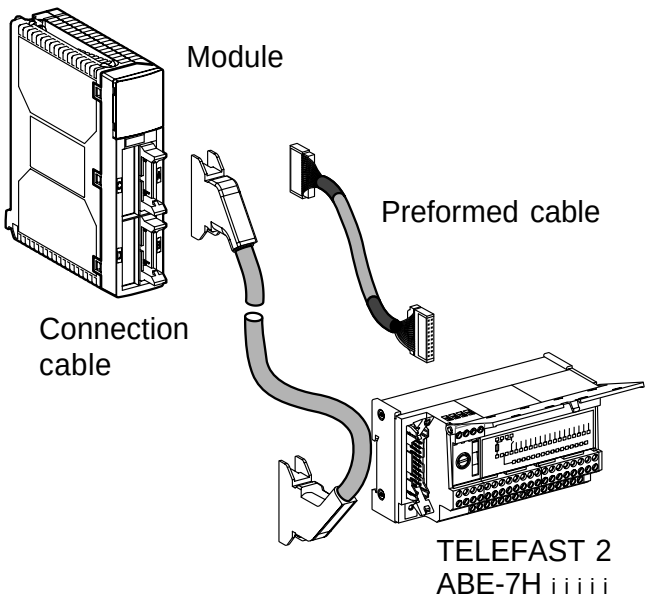

- **Connection cable, 22 gauge (0.34 mm²)**
  Used to connect I/O to TELEFAST 2 rapid wiring connection and adaptation interfaces. The wire cross section (0.34 mm²) enables higher currents to be carried than when using the preformed connection cable (≤500 mA).
  There are 5 product references : **TSX CDP 053** (0.5 meters), **TSX CDP 103** (1 meter), **TSX CDP 203** (2 meters), **TSX CDP 303** (3 meters) and **TSX CDP 503** (5 meters).

Maximum tightening torques :

• on screw for fixing the module on the rack	:	2.0 N.m
• on screw for TSX BLY 01 connection terminal block	:	0.8 N.m
• on screw for TSX CDP • cable connectors	:	0.5 N.m

Characteristics of input modules with terminal blocks

DC inputs

TSX DEY module reference			08D2/16D2	16D3	16A2
Nominal input values		Voltage	24 VDC	48 VDC	24 VDC
		Current	7 mA	7 mA	16 mA
Input limit values	at state 1	Voltage	≥ 11 V	≥ 30 V	≤ Ual - 14 V
		Current	≥ 6.5 mA (U = 11 V)	≥ 6.5 mA (U = 30 V)	≥ 6.5 mA
	at state 0	Voltage	≤ 5 V	≤ 10 V	≥ Ual - 5 V
		Current	≤ 2 mA	≤ 2 mA	≤ 2 mA
	Sensor supply (ripple included)		19…30 V (1)	38…60 V	19…30 V (1)
Input impedance (at U nominal)			4 kΩ	7 kΩ	1.6 kΩ
Logic			positive	positive	negative
IEC 1131-2 conformity			Type 2	Type 2	–
Type of input			current sink	current sink	resistive
Paralleling of inputs			Yes	Yes	Yes
Compatibility 2-wire/3-wire prox. sensor			IEC 947-5-2	IEC 947-5-2	IEC 947-5-2
Sensor voltage monitoring threshold		OK	> 18 V	> 36 V	> 18 V
		Fault	< 14 V	< 24 V	< 14 V
Dielectric strength (50/60 Hz, 1 min)			1500 V rms	1500 V rms	1500 V rms
Consumption (2)	5 V typical		55 / 80 mA	80 mA	80 mA
	typ. sensor supply		25 +(Nx 7) mA	25 +(Nx 7) mA	15 +(Nx 15) mA
Dissipated power (2)			1 +(Nx 0.15) W	1 +(Nx 0.3) W	1 +(Nx 0.4) W

AC inputs

TSX DEY module reference			16A2	16A3	16A4	16A5
Nominal input values		Voltage	24 VAC	48 VAC	100..120 VAC	200..240 VAC
		Current	15 mA	16 mA	12 mA	15 mA
Input limit values	at state 1	Voltage	10 V	29 V	74 V	159 V
		Current	6 mA (U = 10 V)	6 mA (U = 29 V)	6 mA (U = 74 V)	6 mA (U = 159 V)
	at state 0	Voltage/current	5 V/3 mA	10 V/4 mA	20 V/4 mA	40 V/4 mA
	Frequency		47…63 Hz	47…63 Hz	47…63 Hz	47…63 Hz
	Sensor supply		20…26 V	40…52 V	85…132 V	170…264 V
Input impedance			1.6 kΩ	3.2 kΩ	9.2 kΩ	20 kΩ
IEC 1131-2 conformity			Type 2	Type 2	Type 2	Type 1
Type of input			resistive	capacitive	capacitive	capacitive
Compatibility 2-wire/3-wire prox. sensor			IEC 947-5-2	IEC 947-5-2	IEC 947-5-2	IEC 947-5-2
Sensor voltage monitoring threshold		OK	> 18 V	> 36 V	> 82V	> 164V
		Fault	< 14 V	< 24 V	< 40 V	< 80 V
Dielectric strength (50/60 Hz, 1 min)			1500 V rms	1500 V rms	1500 V rms	2000 V rms
Consumption (2)	5 V typical		80 mA	80 mA	80 mA	80 mA
	typ. sensor supply (mA)		15 + (Nx15)	16 + (Nx16)	15 + (Nx15)	12 + (Nx12)
Power dissipated per channel (2)			1+(0.35xN) W	1+(0.35xN) W	1+(0.35xN) W	1+(0.35xN) W

(1) up to 34 V (1 h / 24 h) (2) N = number of channels at 1

Characteristics of input modules with connector(s)

TSX DEY module reference			16FK	32D2K	64D2K
Nominal input values		Voltage	24 VDC	24 VDC	24 VDC
		Current	3.5 mA	3.5 mA	3.5 mA
Input limit values	at state 1	Voltage	≥ 11 V	≥ 11 V	≥ 11 V
		Current	≥ 3 mA	≥ 3 mA	≥ 3 mA
	at state 0	Voltage	≤ 5 V	≤ 5 V	≤ 5 V
		Current	≤ 1.5 mA	≤ 1.5 mA	≤ 1.5 mA
	Sensor supply (ripple included)		19…30 V (1)	19…30 V (1)	19…30 V (1)
Input impedance (at U nominal)			6.3 kΩ	6.3 kΩ	6.3 kΩ
Type of input			current sink	current sink	current sink
Logic			positive	positive	positive
IEC 1131-2 conformity			Type 1	Type 1	Type 1
Paralleling of inputs			Yes	No	No
Compatibility 2-wire/3-wire prox. sensor			Yes	Yes	Yes
Sensor voltage monitoring threshold	OK		> 18 V	> 18 V	> 18 V
	Fault		< 14 V	< 14 V	< 14 V
Dielectric strength (50/60 Hz, 1 min)			1500 V rms	1500 V rms	1500 V rms
Consumption (2)	5 V typical		250 mA	135 mA	155 mA
	24 V typ. sensor		20 +(Nx3.4) mA	30 +(Nx3.5) mA	60 +(Nx3.5) mA
Dissipated power(2)			1.2 +(Nx0.1) W	1 +(Nx0.1) W	1.5 +(Nx0.1) W

(1) up to 34 V (1 h / 24 h) (2) N = number of channels at 1

TSX DEY module reference			32D3K
Nominal input values		Voltage	48 VDC
		Current	7 mA
Input limit values	at state 1	Voltage	≥ 30 V
		Current	≥ 6.5 mA (when U = 30V)
	at state 0	Voltage	≤ 10 V
		Current	≤ 2 mA
	Sensor supply (ripple included)		38…60 V
Input impedance (at U nominal)			6.3 kΩ
Type of input			current sink
Logic			positive
IEC 1131-2 conformity			Type 2
Paralleling of inputs			Yes
Compatibility 2-wire/3-wire prox. sensor			Yes
Sensor voltage monitoring threshold	OK		> 36 V
	Fault		< 24 V
Dielectric strength (50/60 Hz, 1 min)			1500 V rms
Consumption (2)	5 V typical		300 mA
	24 V typ. sensor		50 +(7xN) mA
Dissipated power(2)			2.5 +(Nx0.34) W

(1) up to 34 V (1 h / 24 h) (2) N = number of channels at 1

Characteristics of output modules with terminal block

DC solid state outputs (positive logic)

TSX DSY module reference			08T2 16T2	08T22	08T31	16T3
Nominal values		Voltage	24 VDC	24 VDC	48 VDC	48 VDC
		Current	0.5 A	2 A	1 A	0.25 A
Limit values		Voltage	19…30 V (1)	19…30 V (1)	38…60 V	38…60 V
(for U ≤ 30 or 34 V,		Curr. / chan.	0.625 A	2.5 A	1.25 A	0.31 A
ripple included)		Curr./module	4 A / 7 A	14 A	7 A	4 A
Tungsten filament lamp power			6 W	10 W	10 W	6 W
Leakage current	at state 0		< 0.5 mA	< 1 mA	< 1 mA	0.5 mA
Residual voltage	at state 1		< 1.2 V	< 0.5 V	< 1 V	< 1.5 V
Min load impedance			48Ω	12Ω	48Ω	192Ω
Response time			1.2 ms	200µs	300µs	1.2 ms
Preactuator voltage monitoring threshold		OK	> 18 V	> 16 V	> 36 V	> 36 V
		Fault	< 14 V	< 14 V	< 24 V	< 24 V
Dielectric strength (50/60 Hz, 1 min)			1500 V rms	1500 V rms	1500 V rms	1500 V rms
Consumption	typically 5 V		55 / 80 mA	55 mA	55 mA	80 mA
	preactuator supply		30/ 40 mA	30 mA	30 mA	40 mA
Dissipated power (13)			1.1+(0.75xN)W	1.3+(0.2xN)W	2.2+(0.55xN)W	2.4+(0.85xN)W

Relay outputs, thermal current 3 A

TSX DSY module reference			08R5 / 16R5			
Operating voltage	DC		10...34 VDC			
	AC		19...264 VAC			
Thermal current			3 A			
AC load	Resistive duty AC12	Voltage	24 VAC	48 VAC	100..120VAC	200..240VAC
		Power	50 VA (6)	50 VA (7) 110 VA (5)	110 VA (7) 220 VA (5)	220 VA (7)
	Inductive duty AC14 and AC15	Voltage	24 VAC	48 VAC	100..120 VAC	200..240 VAC
		Power	24 VA (5)	10 VA (11) 24 VA (9)	10 VA (12) 50 VA (8) 110 VA (3)	10 VA (12) 50 VA (10) 110 VA (7) 220 VA (2)
DC load	Resistive duty DC12	Voltage	24 VDC			
		Power	24 W (7) 40 W (4)			
	Inductive duty DC13	Voltage	24 VDC			
		Power	10 W (9) 24 W (7)			
Response time	Switch on		< 8 ms			
	Switch off		< 10 ms			
Isolation (50/60 Hz, 1 min)			2000 V rms			
Consumption (13)	5 V typical		55 / 80 mA			
	24 V typical relay		(8.5 x N) mA			
Dissipated power (13)			0.25 + (0.2 x N) W			

DC relay outputs

TSX DSY module reference			08R4D			
Operating voltage limit	AC		not allowed			
	DC		19..143 VDC			
Thermal current			5 A	(max 6 A per common)		
DC load	Resistive duty DC12	Voltage	24 VDC	48 VDC	100..130 VDC	
		Power	50 W (7) 100 W (4)	100 W (7) 200 W (4)	220 W (7) 440 W (4)	
	Inductive duty DC13	Voltage	24 VDC	48 VDC	110 VDC	
		Power	20 W (9) 50 W (7)	50 W (9) 100 W (7)	110 W (9) 220 W (7)	
Response time	Switch on		< 10 ms			
	Switch off		< 15 ms			
Isolation (50/60 Hz, 1 min)			2000 V rms			
Consumption (13)	5 V typical		55 mA			
	24 V typical relay		(10 x N) mA			
Dissipated power (13)			0.25 + (0.24 x N) W			

Relay outputs, thermal current 5 A

TSX DSY module reference			08R5A			
Operating voltage	DC		19...60 VDC			
	AC		19...264 VAC			
Thermal current			5 A	(max. 6 A per common)		
AC load	Resistive duty AC12	Voltage	24 VAC	48 VAC	100..120 VAC	200..240 VAC
		Power	100 VA (6)	100 VA (7) 200 VA (5)	220 VA (7) 440 VA (5)	440 VA (7)
	Inductive duty AC14 and AC15	Voltage	24 VAC	48 VAC	100..120 VAC	200..240 VAC
		Power	50 VA (5)	20 VA (11) 50 VA (9)	20 VA (12) 110 VA (8) 220 VA (3)	20 VA (12) 110 VA (10) 220 VA (7) 440 VA (2)
DC load	Resistive duty DC12	Voltage	24 VDC	48 VDC		
		Power	24 W (7) 50 W (4)	50 W (7) 100 W (4)		
	Inductive duty DC13	Voltage	24 VDC	48 VDC		
		Power	10 W (9) 24 W (7)	24 W (9) 50 W (7)		
Response time	Switch on		< 10 ms			
	Switch off		< 15 ms			
Isolation (50/60 Hz, 1 min)			2000 V rms			
Consumption (13)	5 V typical		55 mA			
	24 V typical relay		(10 x N) mA			
Dissipated power (13)			0.25 + (0.24 x N) W			

(1) up to 34 V (1 h / 24 h)
(2) 0.1 x 10^6 operations
(3) 0.15 x 10^6 operations
(4) 0.3 x 10^6 operations
(5) 0.5 x 10^6 operations
(6) 0.7 x 10^6 operations
(7) 1 x 10^6 operations
(8) 1.5 x 10^6 operations
(9) 2 x 10^6 operations
(10) 3 x 10^6 operations
(11) 5 x 10^6 operations
(12) 10 x 10^6 operations
(13) N = no. of channels at 1

Triac outputs

TSX DSY module reference		08S5/16S5	16S4
Operating voltage		41..264 VAC	20..132 VAC
Permissible current	TSX DSY 08S5	2 A / channel - 12 A / module	1 A / channel - 12 A / module
	TSX DSY 16S5	1 A / channel - 12 A / module	
Response time	Switch on	≤ 10 ms	≤ 10 ms
	Switch off	≤ 10 ms	≤ 10 ms
Isolation (50/60 Hz, 1 min)		2000 V rms	2000 V rms
Consumption 5 V typical	TSX DSY 08S5	125 mA	220 mA
	TSX DSY 16S5	220 mA	
Dissipated power	TSX DSY 08S5	0.5 W + 1 W/A per output	0.85 W + 1 W/A per output
	TSX DSY 16S5	0.85 W + 1 W/A per output	

Characteristics of output modules with connector(s)

DC solid state outputs (positive logic)

TSX DSY module reference		32T2K	64T2K
Nominal values	Voltage	24 VDC	24 VDC
	Current	0.1 A	0.1 A
Limit values (for U ≤ 30 or 34 V, ripple included)	Voltage	19…30 V (1)	19…30 V (1)
	Current / channel	0.125 A	0.125 A
	Current / module	3.2 A	5 A
Tungsten filament lamp power		1.2 W (maximum)	1.2 W (maximum)
Leakage current	at state 0	< 0.1 mA when U = 30 V	< 0.1 mA when U = 30 V
Residual voltage	at state 1	< 1.5 V when I = 0.1 A	< 1.5 V when I = 0.1 A
Min load impedance		220Ω	220Ω
Paralleling of outputs		Yes : 3 max	Yes : 3 max
Response time		1.2 ms	1.2 ms
Preactuator voltage monitoring threshold	OK	> 18 V	> 16 V
	Fault	< 14 V	< 14 V
Dielectric strength (50/60 Hz, 1 min)		1500 V rms	1500 V rms
Consumption	5 V typical	135 mA	155 mA
	24 V typ. sensor	30 mA	60 mA
Dissipated power (2)		1.6 + (0.1 x N) W	2.4 + (0.1 x N) W

(1) up to 34 V (1 h / 24 h)

(2) N = number of channels

Characteristics of mixed I/O module with connectors

Input characteristics

TSX DMY module reference			28FK / 28RFK
Nominal input values		Voltage	24 VDC
		Current	3.5 mA
Input limit values	at state 1	Voltage	≥ 11 V
		Current	≥ 3 mA
	at state 0	Voltage	≤ 5 V
		Current	≤ 1.5 mA
	Sensor supply (ripple included)		19…30 V (up to 34 V (1 h / 24 h))
Input impedance (at U nominal)			6.3 kΩ
Type of input			current sink
Paralleling of inputs			Yes
Compatibility 2-wire/3-wire prox. sensor			Yes
Sensor voltage monitoring threshold	OK		> 18 V
	Fault		< 14 V
Dielectric strength (50/ 60 Hz, 1 min)			1500 V rms
Consumption	5 V typical		300 mA
	24 V typical sensor		20 +(3.5xN) mA
Dissipated power (1)			1.2 +(0.1xNb) W

(1) N = number of channels at 1

Output characteristics

TSX DMY module reference			28FK / 28RFK
Nominal output values	Voltage		24 VDC
	Current		500 mA
Output limit values	Voltage		19…30 V (up to 34 V (1 h / 24 h)
	Current / channel		0.625 A
	Current / module		4 A
Tungsten filament lamp power			6 W
Leakage current	at state 0		< 1 mA
Residual voltage	at state 1		< 1.2 V
Minimum load impedance			48 Ω
Response time			0.6 ms
Preactuator voltage monitoring threshold		OK	> 18 V
		Fault	< 14 V
Dielectric strength (50/60 Hz, 1 min)			1500 V rms
Consumption	24 V preactuator		30/40 mA
Dissipated power			1 W + 0.75 W per output at 1

Maintenance / Diagnostics

The status lamps on the front panel of the module, enable fast diagnostics of the following :

- 3 module status lamps provide information on the module operating mode
  - **RUN** (green) : module status (on : normal operation; off : faulty module)
  - **ERR** (red) : internal faults (on : module failure; flashing : communication fault)
  - **I/O** (red) : external faults (on : overload, short-circuit, sensor/ preactuator voltage fault; flashing : terminal block fault)

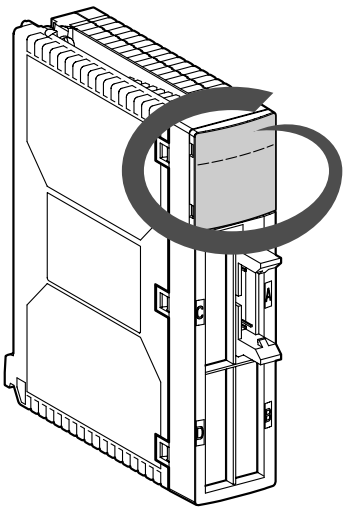

⚠ **During the self-tests the RUN, ERR and I/O indicator lamps flash.**

- 8, 16 or 32 channel status indicators give information on the status of every input or output (on : channel at state 1; flashing : faulty channel, overload or short-circuit; off : channel at state 0).

  In addition, the **+32** indicator, found on 64 channel modules, indicates the group of channels displayed (off : channels 0 to 31; on : channels 32 to 63). A pushbutton (only on 64-channel modules) is used to select the group of channels.

  For mixed I/O modules with 28 I/O (16I + 12O):
  - indicators 0 to 15 display the state of the inputs
  - indicators 16 to 27 display the state of the outputs

8-channel module

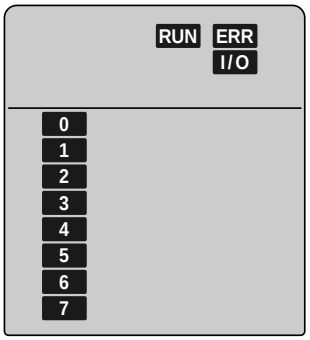

16-channel module

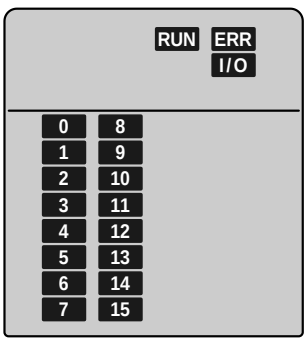

28/32/64-channel module

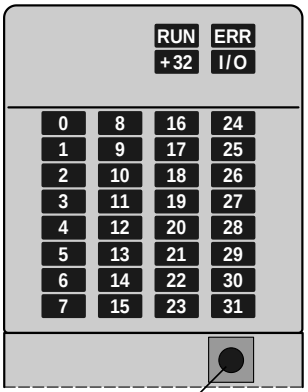

Pushbutton

Status / Lamps	On 	Flashing 	Off 
RUN	Normal operation	-	Module faulty or switched off
ERR	Internal fault module failure	Communication fault if RUN lamp on Module not configured if RUN lamp off (1)	No module fault
I/O	External fault : overload, short-circuit, sensor/ preactuator voltage fault	Terminal block fault	No external fault
0…i	Channel at state 1	Faulty channel, overload or short-circuit	Channel at state 0

(1) This state is only available on module versions ≥ V2.0.

Operating conditions

Operating temperature		0…60° C
Relative humidity		10…95% (without condensation)
Operating altitude		0…2000 m
Withstand to	**vibrations**	IEC 68-2-6, Fc test, severity 2 g
	shocks	IEC 68-2-27, Ea test
Withstand to electrostatic discharge		IEC 1000-4-2, level 3
Immunity to	**electromagnetic fields**	IEC 1000-4-3, level 3
	rapid transients	IEC 1000-4-4, level 3
	shock waves	IEC 1000-4-5
	damped oscillating waves	IEC 1000-4-12
Withstand to LF interference		IEC 1131-2
Storage temperature		-25…+70° C
Mechanical safety		IP 20 with TSX RKA 01 cover

ENGLISH

Discrete input modules

TSX DEY 08D2

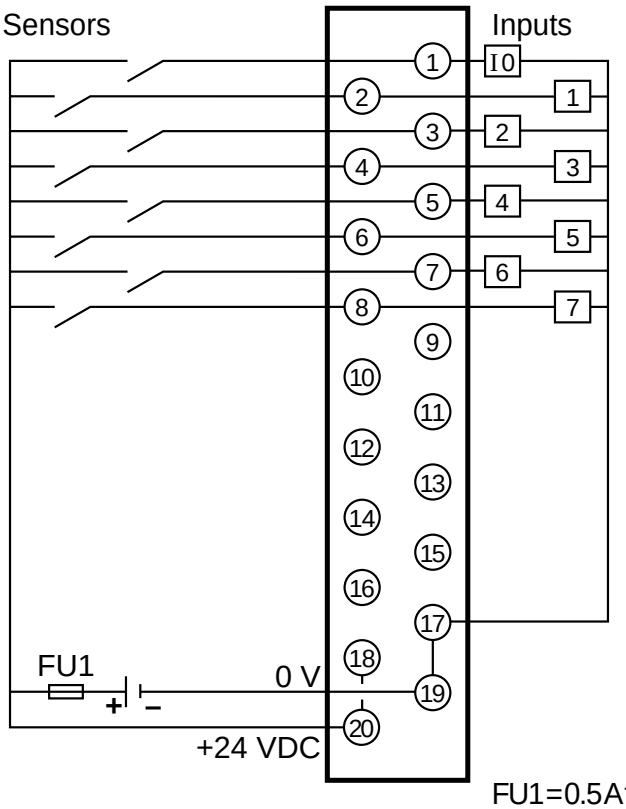

TSX DEY 16D2

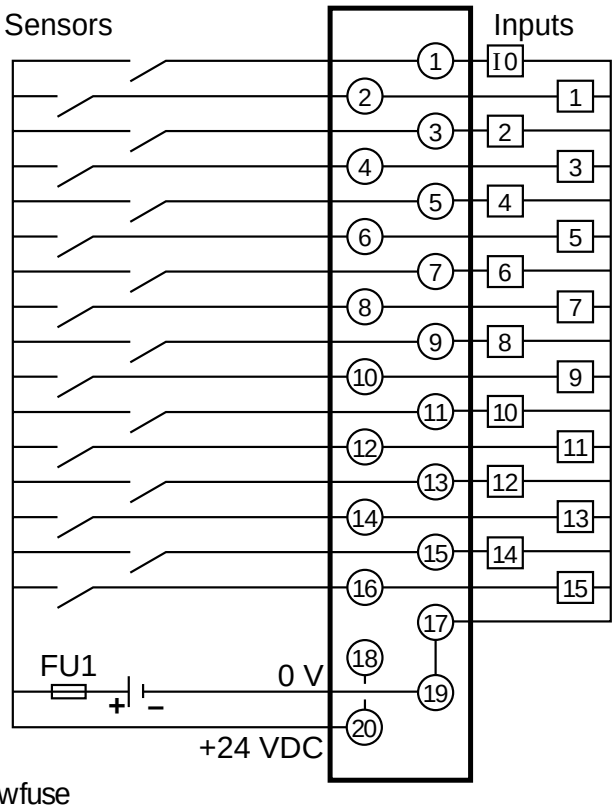

FU1 = 0.5 A fast blow fuse

TSX DEY 16D3

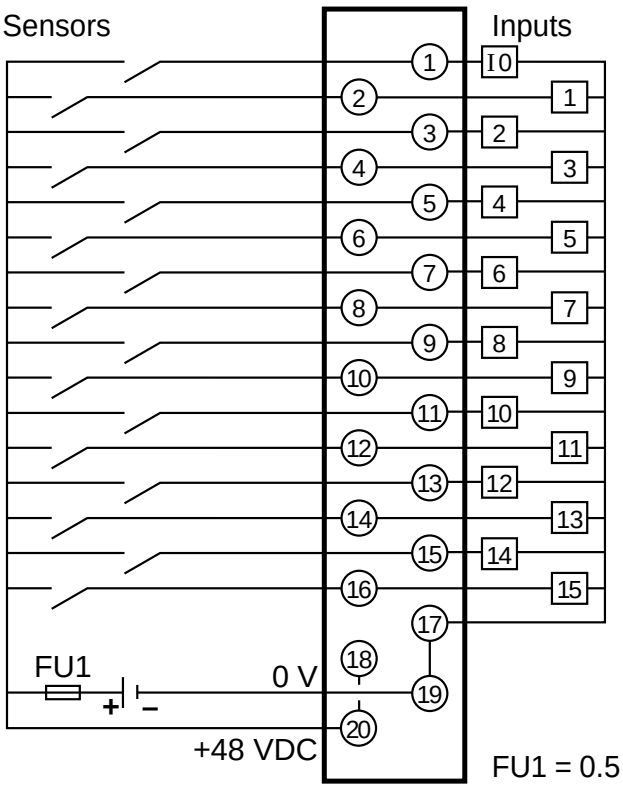

TSX DEY 16A2 / 16A3 / 16A4 / 16A5

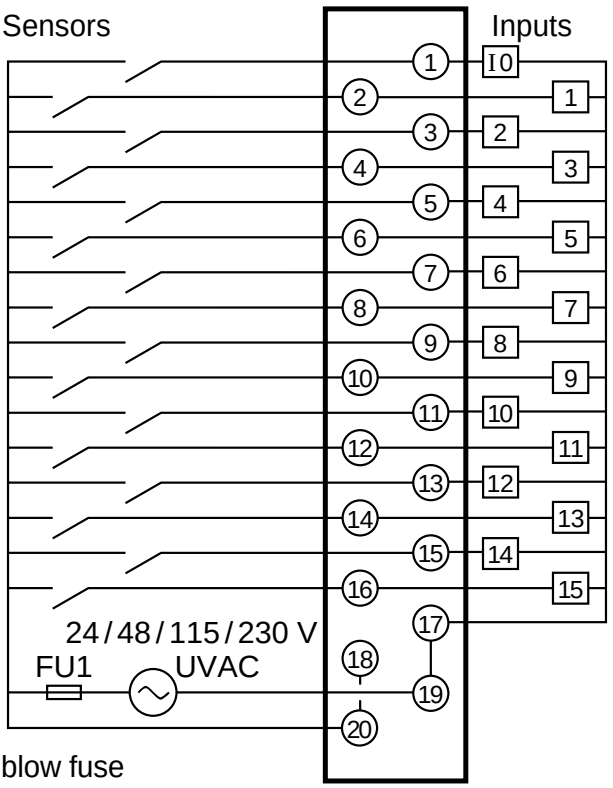

FU1 = 0.5 A fast blow fuse

TSX DEY 16FK

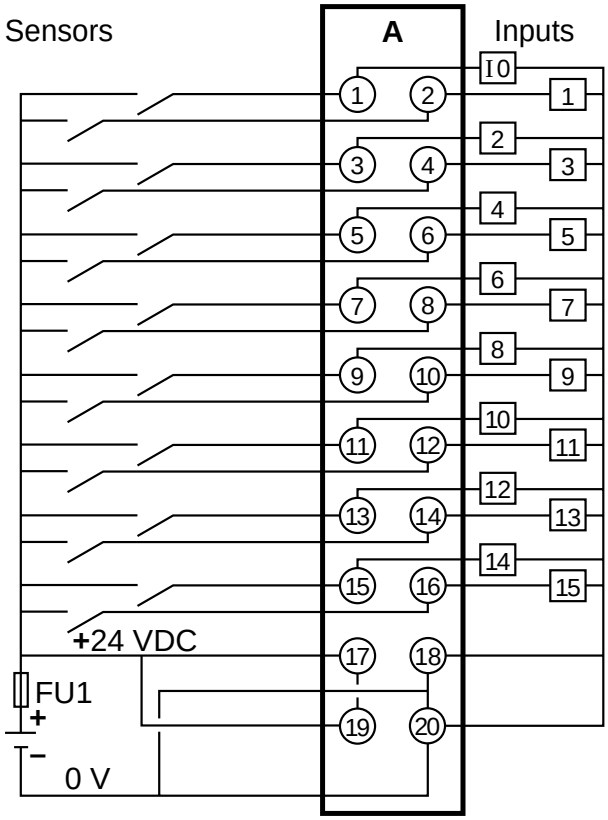

TSX DEY 32D2K

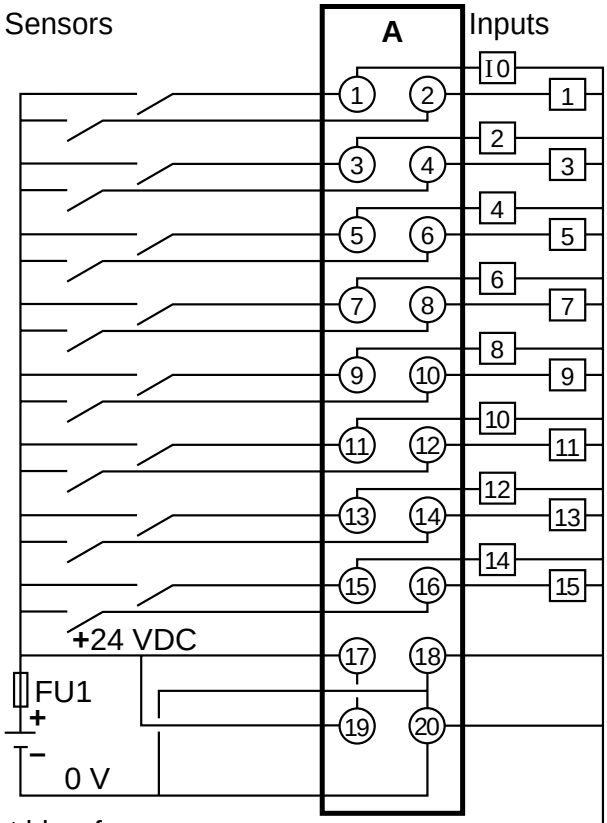

FU1 = 0.5 A fast blow fuse

Pin number (HE10)	Wire colors (TSX CDP i01 cables)
1	White
2	Brown
3	Green
4	Yellow
5	Gray
6	Pink
7	Blue
8	Red
9	Black
10	Purple
11	Gray - pink
12	Red - blue
13	White - green
14	Brown - green
15	White - yellow
16	Yellow - brown
17	White - gray
18	Gray - brown
19	White - pink
20	Pink - brown

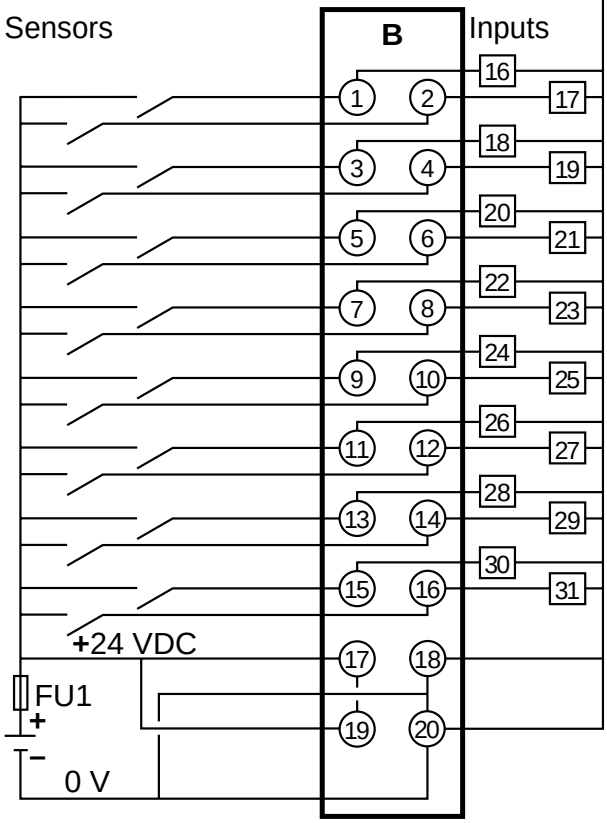

TSX DEY 32D3K

(when using a TSX CDP i 01 preformed cable, the correspondence between the HE10 connector pins and the wire colors is shown on page 35)

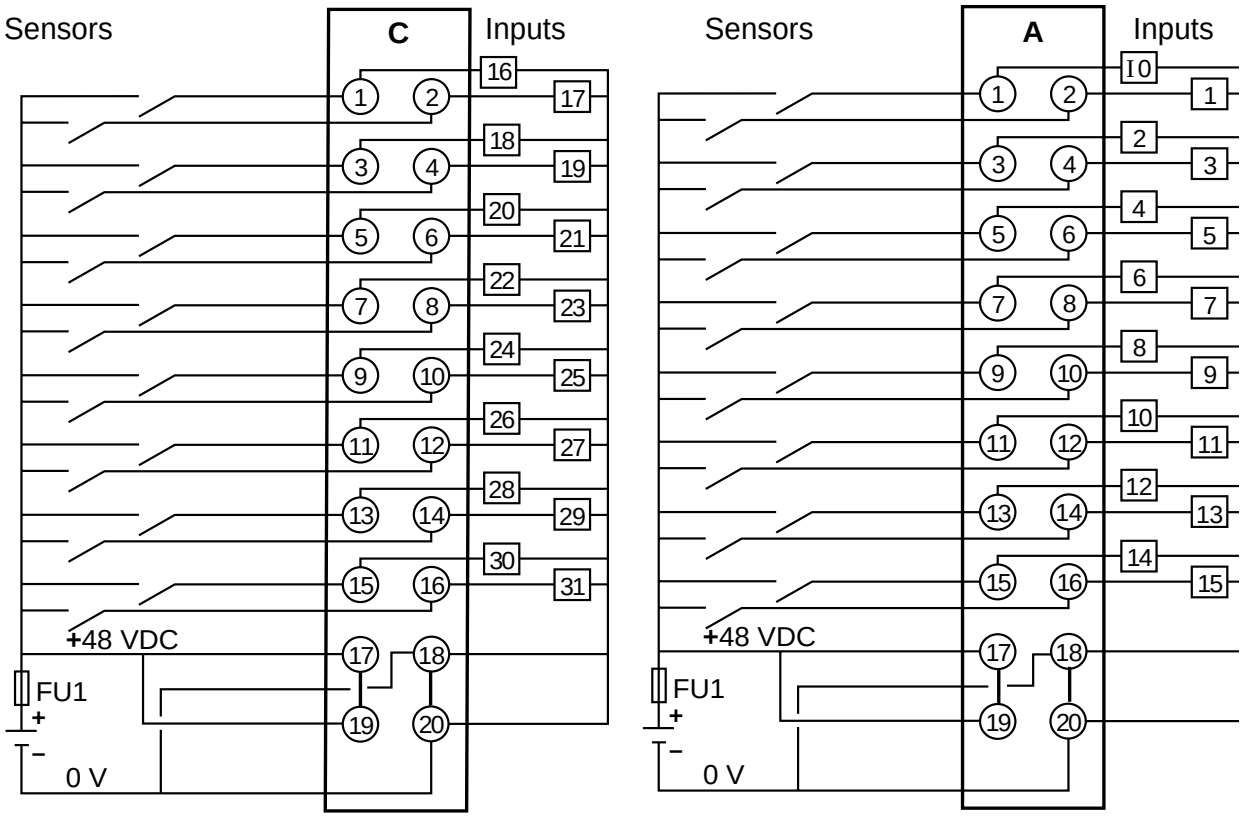

FU1 = 0.5 A fast blow fuse

TSX DEY 64D2K (when using a TSX CDP ⁞ 01 preformed cable, the correspondence between the HE10 connector pins and the wire colors is shown on page 35)

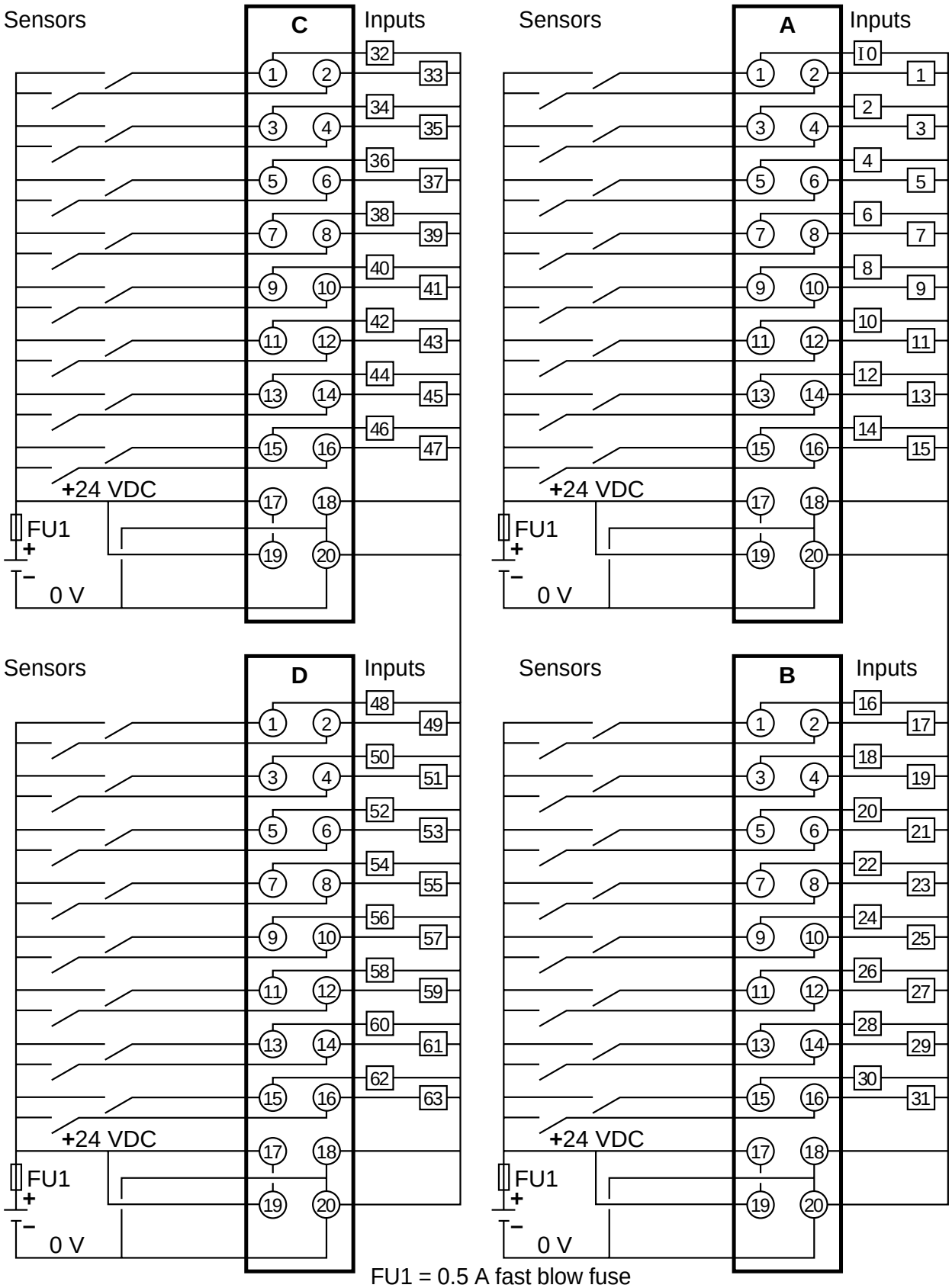

FU1 = 0.5 A fast blow fuse

Discrete output modules

TSX DSY 08T2

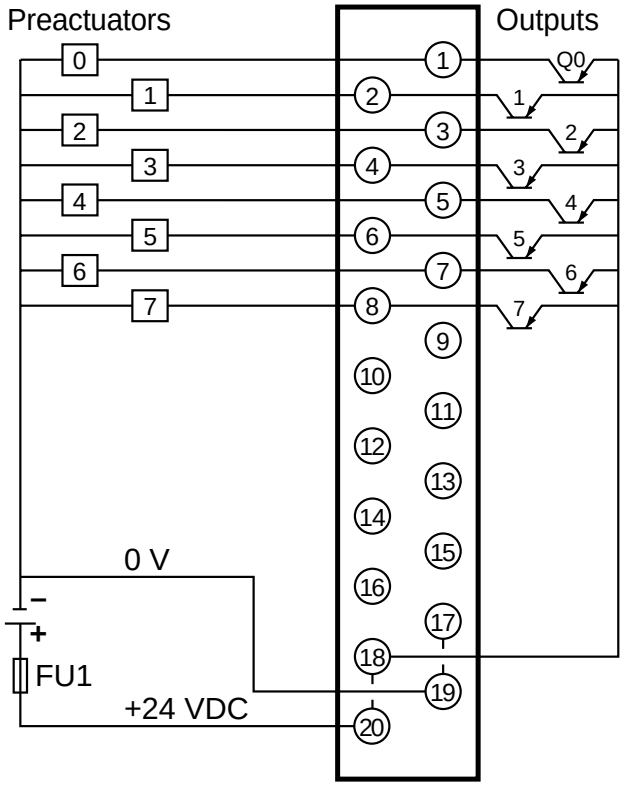

TSX DSY 16T3

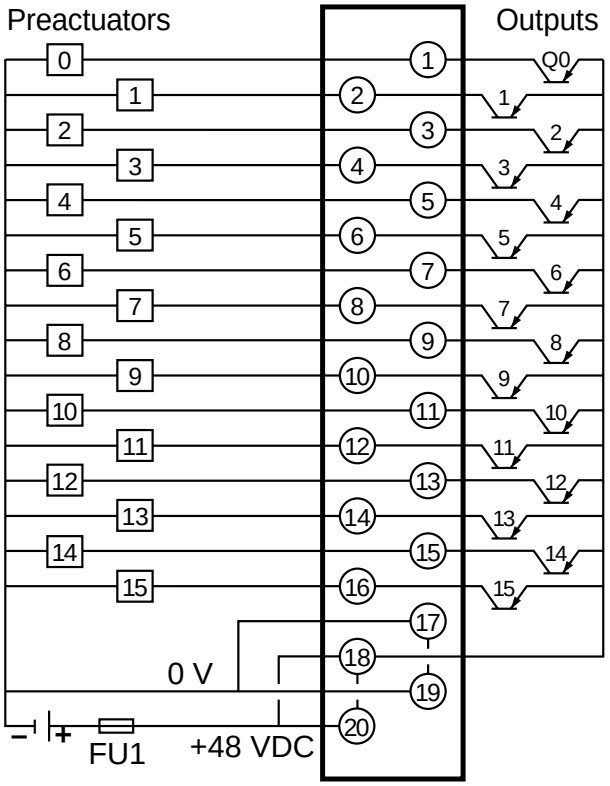

FU1 = 6.3 A fast blow fuse

TSX DSY 16T2

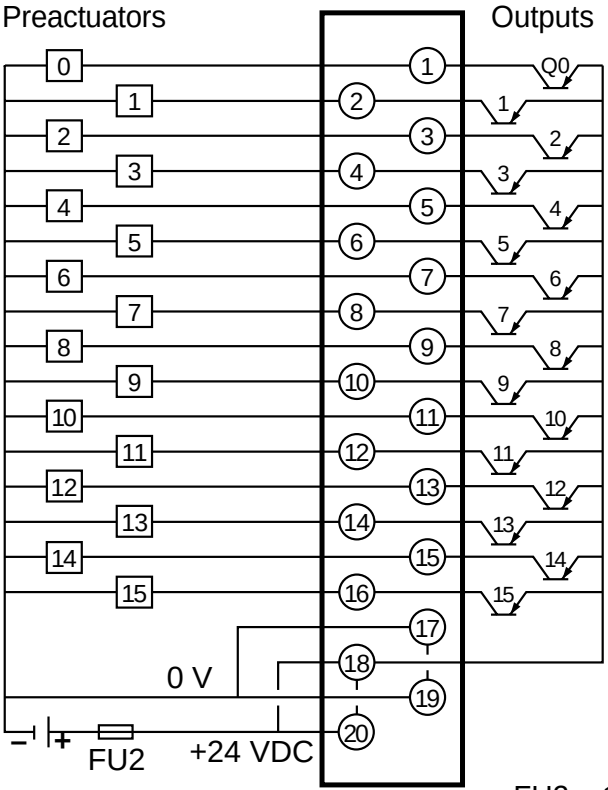

FU2 = 10 A fast blow fuse

TSX DSY 08T22

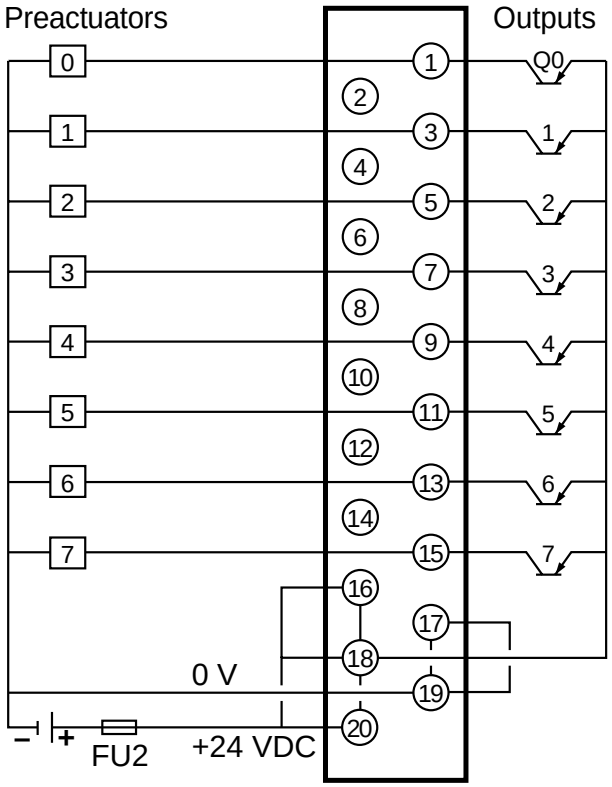

FU2 = 16 A fast blow fuse

TSX DSY 08T31

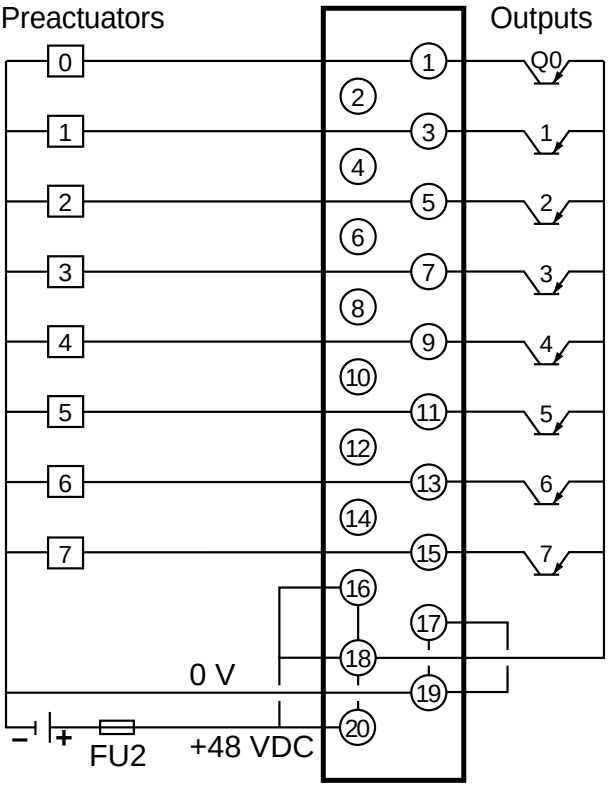

FU2 = 10 A fast blow fuse

TSX DSY 08R5

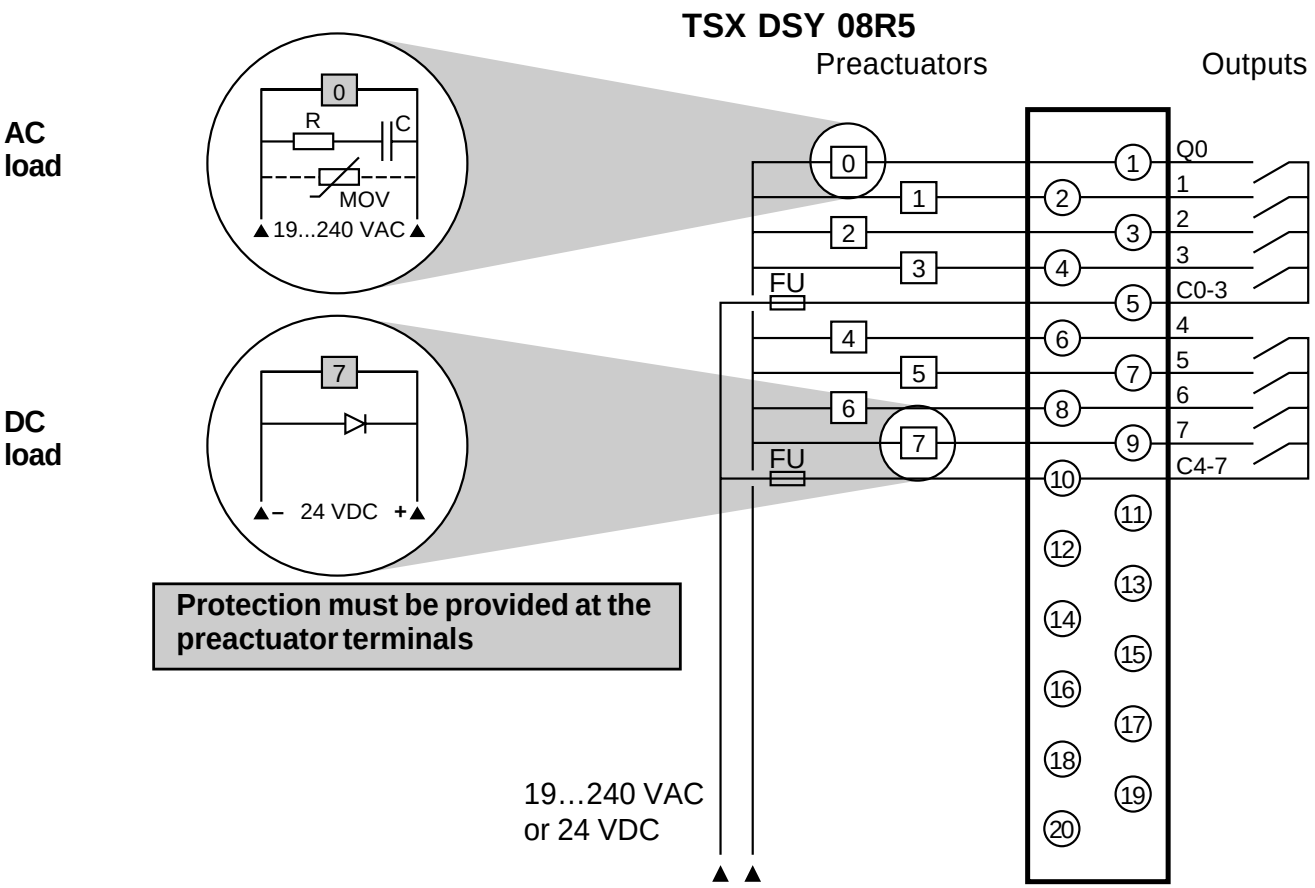

Protection must be provided at the preactuator terminals

ENGLISH

TSX DSY 16R5

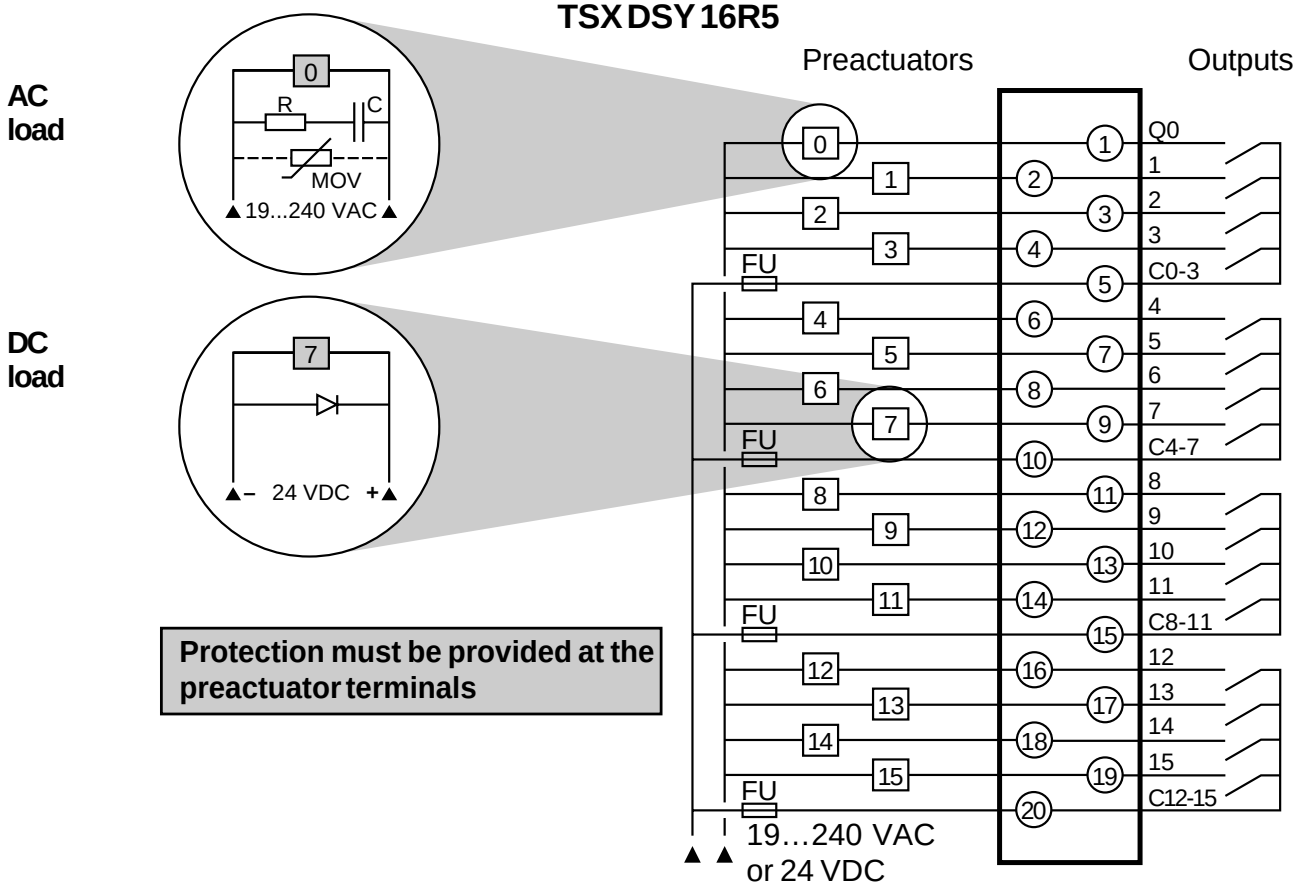

Protection must be provided at the preactuator terminals

TSX DSY 08R5A

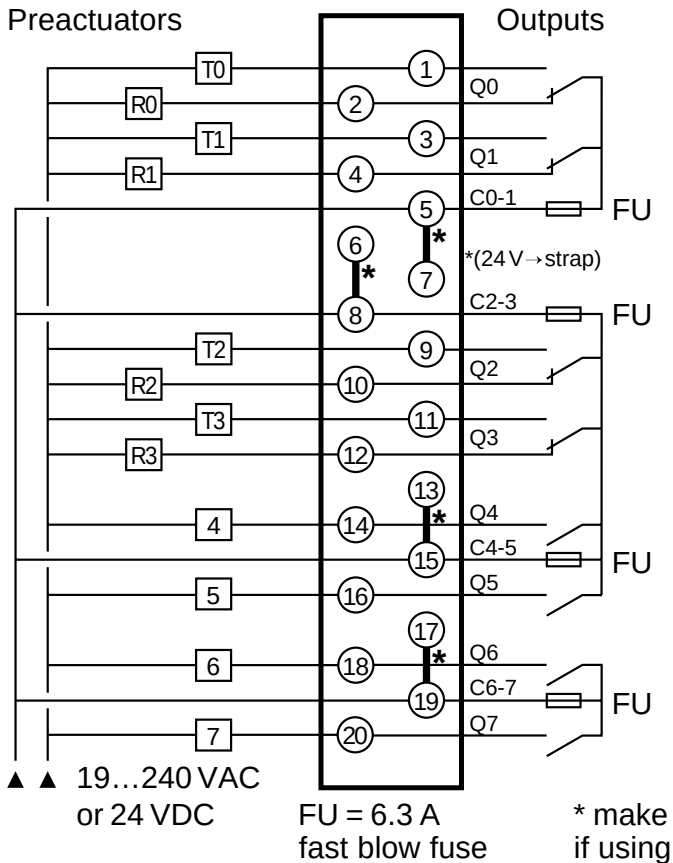

TSX DSY 08R4D

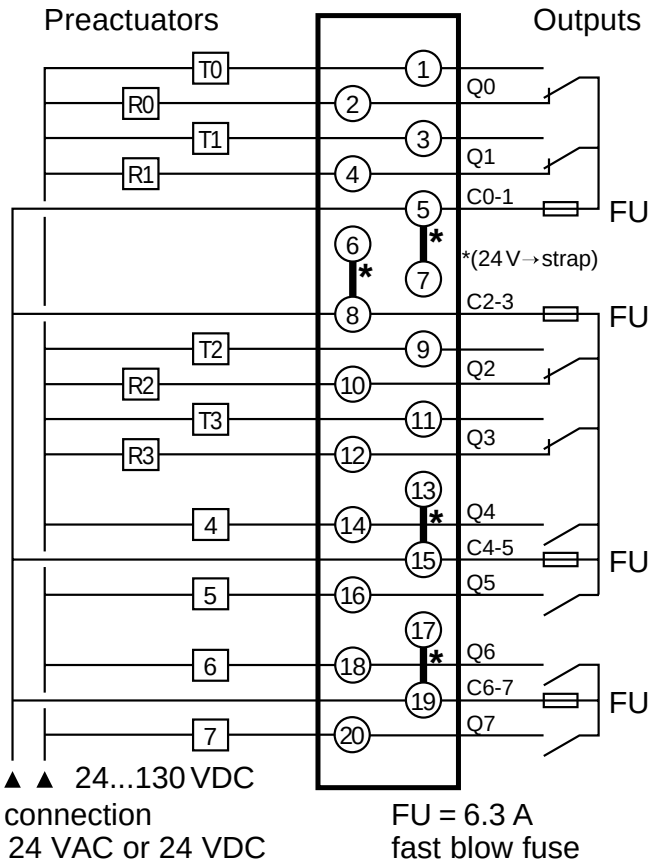

TSX DSY 08S5

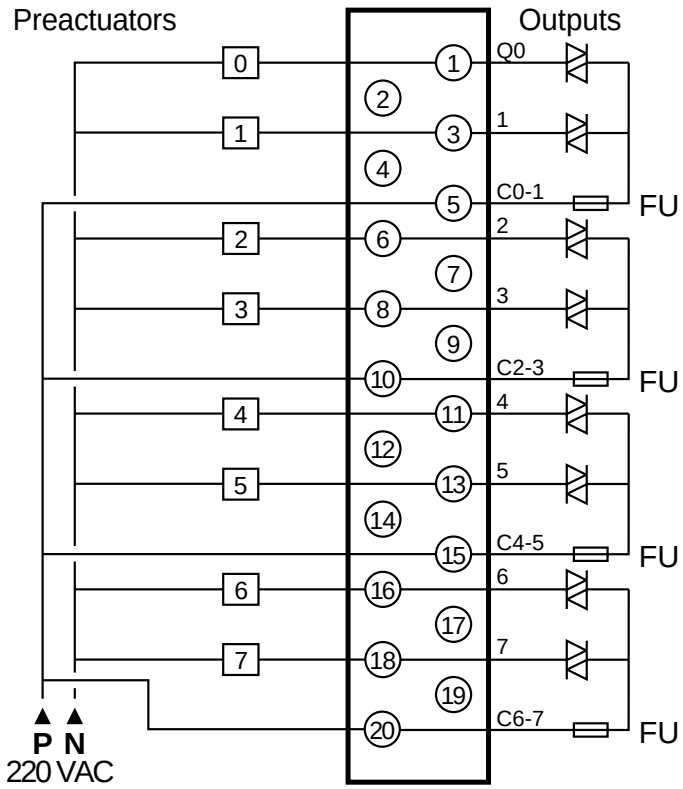

FU = interchangeable
5 A ultra fast blow fuse

TSX DSY 16S4

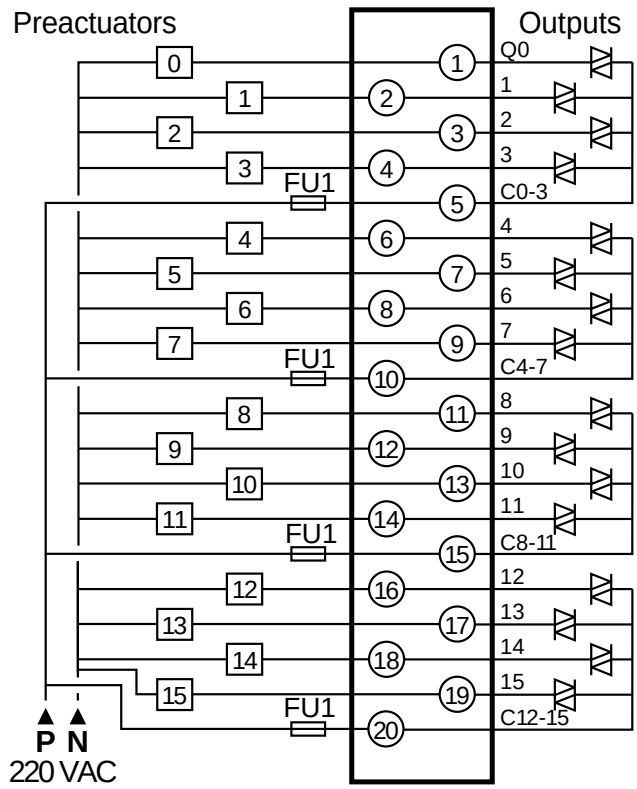

FU1 = 5 A ultra fast blow fuse

TSX DSY 16S5

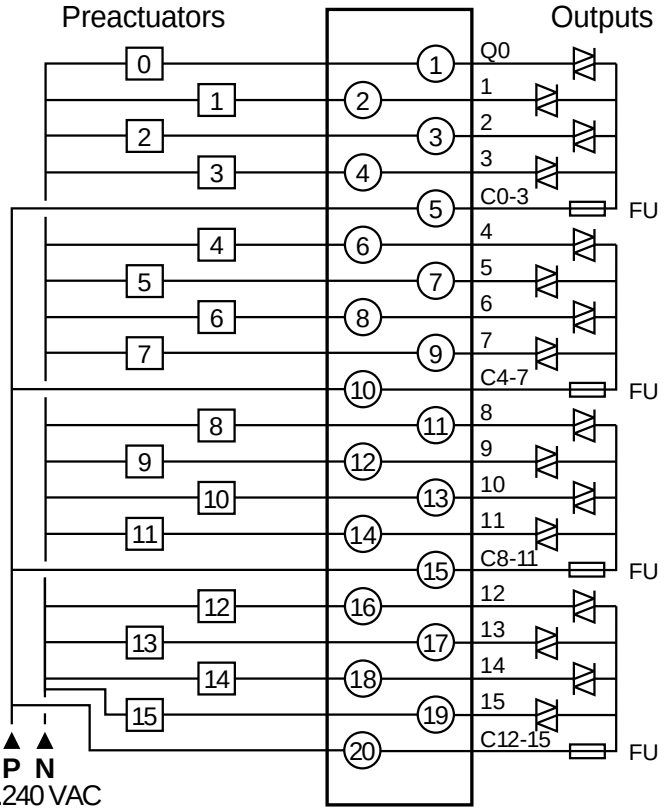

FU = interchangeable
5 A ultra fast blow fuse

TSX DSY 32T2K (when using a TSX CDP i 01 preformed cable, the correspondence between the HE10 connector pins and the wire colors is shown on page 35)

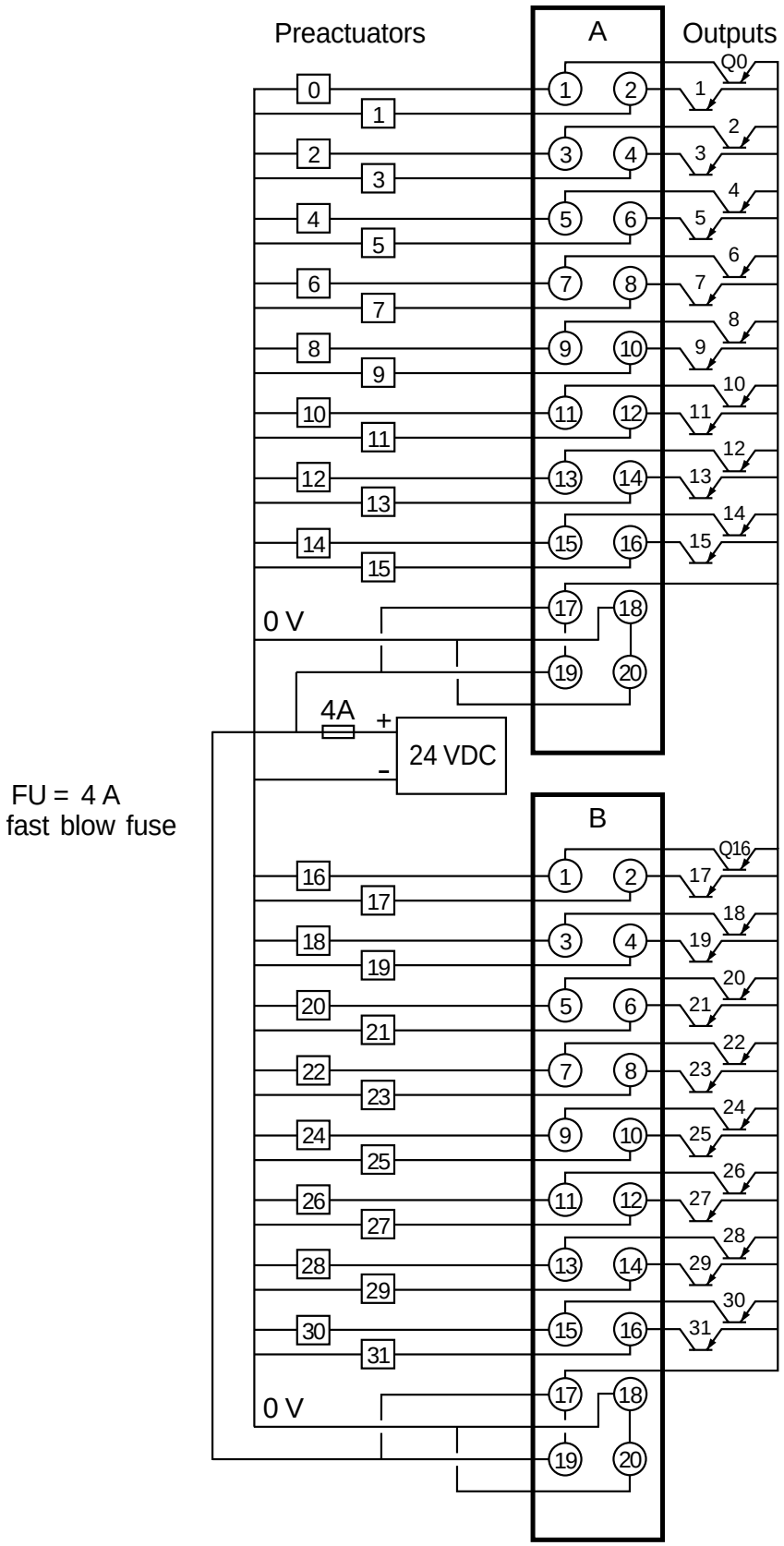

⚠ Connect :
- the + 24VDC to terminals 17 and 19
- the 0V to terminals 18 and 20

TSX DSY 64T2K (when using a TSX CDP i 01 preformed cable, the correspondence between the HE10 connector pins and the wire colors is shown on page 35)

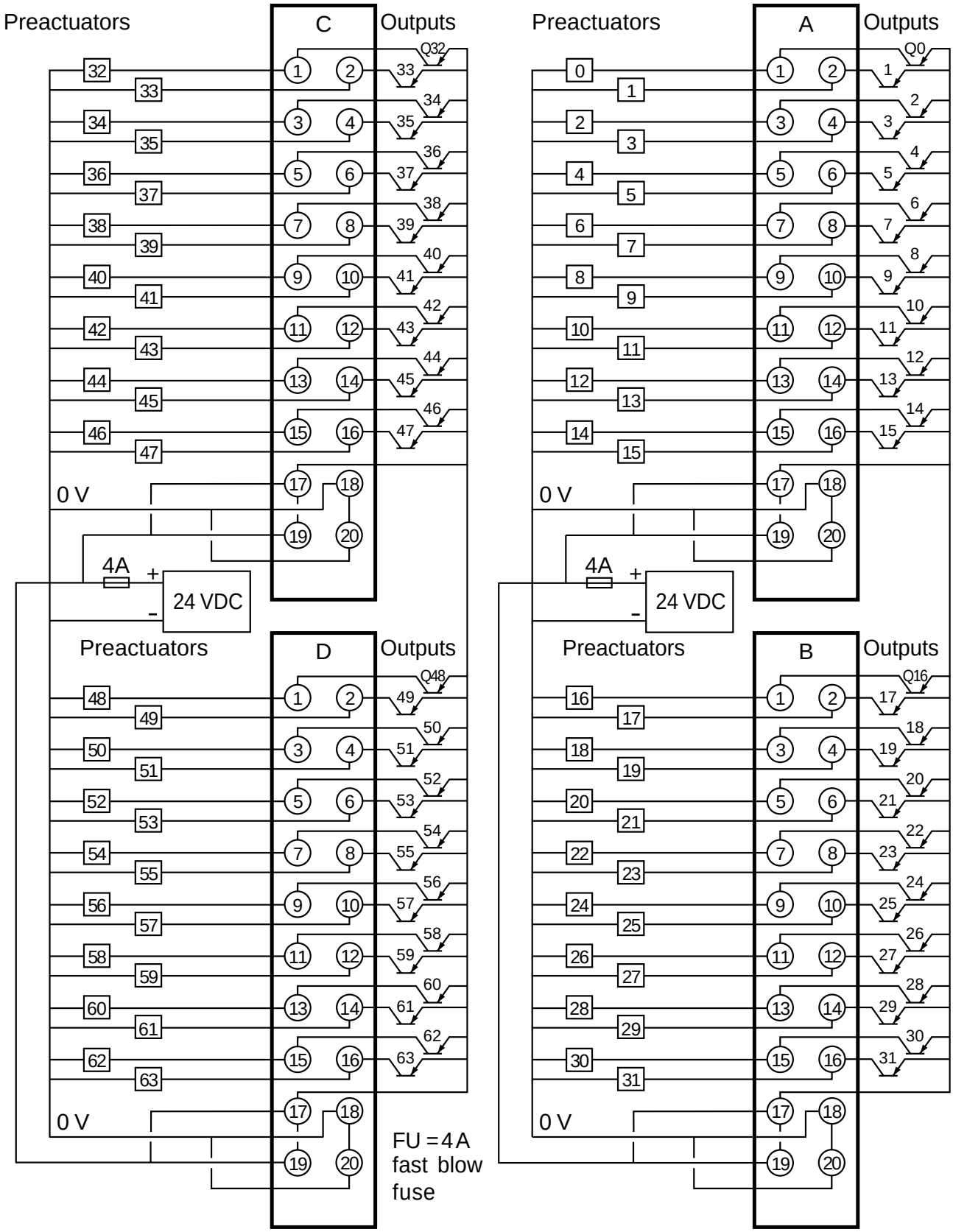

⚠ Connect the + 24VDC to terminals 17 and 19 and the 0V to terminals18 and 20

Discrete mixed I/O module

TSX DMY 28FK/28RFK (when using a TSX CDP i 01 preformed cable, the correspondence between the HE10 connector pins and the wire colors is shown on page 35)

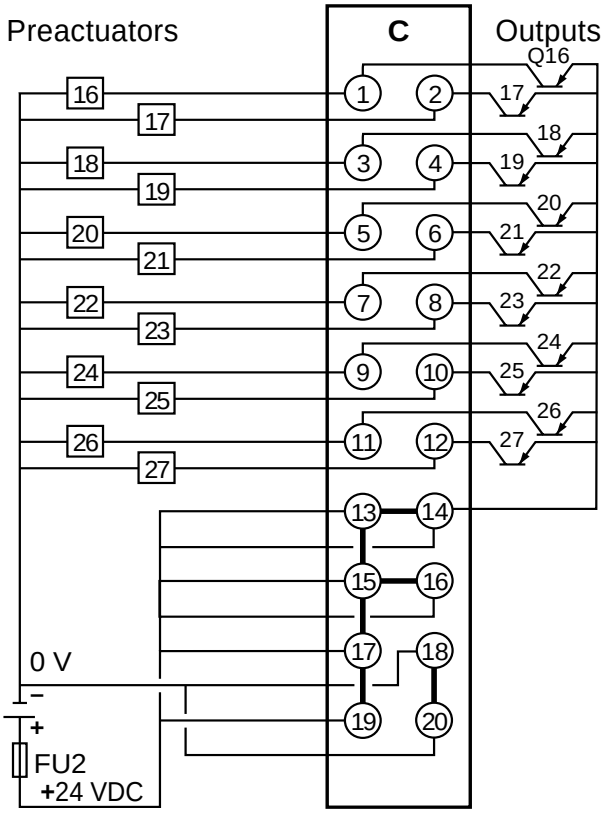

FU2 = 2 A fast blow fuse

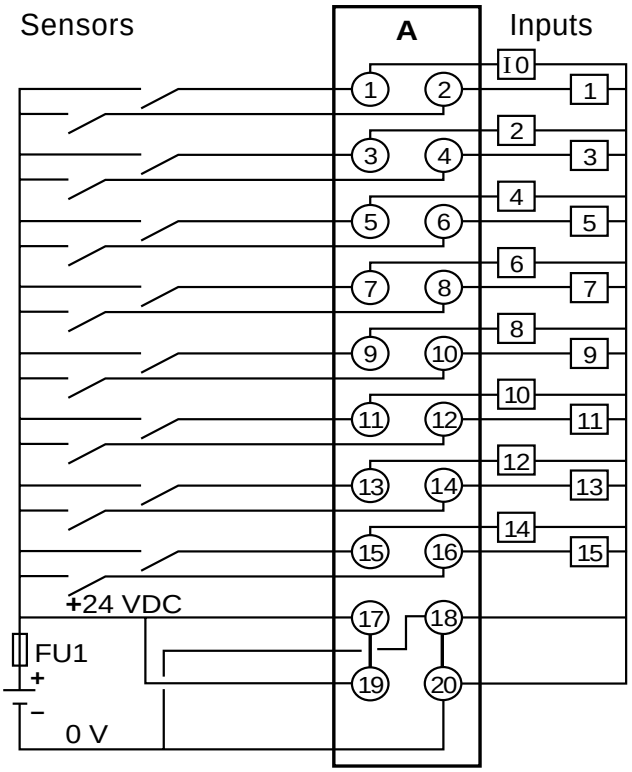

FU1 = 0.5 A fast blow fuse

35002600

04

Schneider Automation Inc.
One High Street
North Andover, MA 01845
Tél.: (1) 978 794 0800
Fax : (1) 978 975 9010

Schneider Automation SAS
245, route des Lucioles - BP 147
F-06903 Sophia Antipolis
Tél. : (33) (0)4 92 38 20 00
Fax : (33) (0)4 93 65 30 31

Schneider Automation GmbH
Steinheimer Straße 117
D-63500 Seligenstadt
Tél. : (49) 61 82 81 29 00
Fax : (49) 61 82 81 21 55

Printed in France

September 2002