Modicon Premium PLCs
TSX 57/PCX 57
Counting, Axis Command, Cam, Sercos

eng March 2005

35005981_00

a brand of Schneider Electric

Telemecanique

Document Set

At a Glance

This documentation comprises 5 Volumes:

- Volume 1
  - Racks/Supply/Processors
  - Operation/Diagnostics/Maintenance
  - Standards and operating conditions
  - Process supply module
- Volume 2
  - Discrete interfaces
  - Safety
- Volume 3
  - Counting
  - Movement command
- Volume 4
  - Communication
  - Bus interface and networks
- Volume 5
  - Analog
  - Weighing

Table of Contents

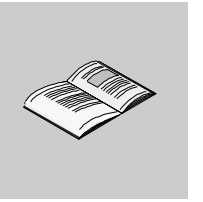

About the Book 13

Part I TSX CTY 2A / 4A /2C counting modules 15
At a Glance 15

Chapter 1 Introduction to the TSX CTY 2A/ 4A /2C counting modules . . 17
At a Glance 17
General 18
Physical description. 20

Chapter 2 Functions 23
At a Glance 23
Down counting function (TSX CTY 2A / 4A modules) 24
Up counting function (TSX CTY 2A / 4A modules) 25
Up/down counting function (TSX CTY 2A / 4A modules) 26
Up/down counting and measurement functions (TSX CTY 2C module) 27
Up/down counting on the TSX CTY 2A/4A modules 29
Process diagram 31
Up/down counting on the TSX CTY 2A/4A modules 32
Process diagram 1 36
Process diagram 2 37
Process diagram 3 38
Process diagram 4 39
Up/down counting and measuring on a TSX CTY 2C module 40
Process diagram 5 44
Connection process for the EPSR "supply feedback" input 45

Chapter 3 Installing the counting modules 47
At a Glance 47
Maximum number of counting modules 49
Types of sensor that can be used on counter inputs. 51
General counting module characteristics 52
Counter input characteristics (TSX CTY 2A / 4A) 53
TSX CTY 2A/4A: Characteristics of use on 5 VDC/24 VDC 54
Counter input characteristics (TSX CTY 2C). 55

TSX CTY 2C: Characteristics of use on 5 VDC/24 VDC 56
Compatibility of IA, IB and IZ inputs. 57
Count sensor supply monitor characteristics (encoder or proximity sensor) 58
Auxiliary input characteristics (preset, confirmation, capture) 59
Auxiliary output characteristics 61
15-pin SUB-D connectors Standard for a TSX CTY 2A / 4A module. 63
15-pin SUB-D connectors Standard for a TSX CTY 2C module 66
HE10 20-pin connector of a TSX CTY 2A/4A module 69
20-pin HE10 connector of a TSX CTY 2C module 72
Principle for connecting counter proximity sensors 75
Connecting counter sensors and their supply 76
Wiring precautions 78
Process for connecting encoder count sensors 80
Connecting an encoder to a TSX CTY 2A / 4A / 2C module 81
Example of connecting an incremental encoder with Totem Pole outputs 83
Example of connecting an incremental encoder with NPN open collector outputs. 85
Example of connecting an incremental encoder with PNP open collector outputs87
Example of connecting an absolute encoder with a serial output or parallel outputs, via ABE-7CPA11 adapted TELEFAST (only TSX CTY 2C module) 89
Principle for connecting sensors onto auxiliary I/O 91
Connecting sensors and their supply. 93
General rules for implementation. 94

Chapter 4 Appendices. 97
At a Glance 97
Connecting TELEFAST 2: ABE-7CPA01. 99
Availability of counting signals on the TELEFAST screw terminal block 101
Correspondence between TELEFAST ABE-7CPA01 terminal block and 15 pin SUB-D connector 102
TELEFAST 2 connection base: ABE-7H16R20. 103
Availability of signals on TELEFAST screw terminal block 104
Correspondence between TELEFAST ABE-7H16R20 terminals and HE10 connector 105
TELEFAST 2 connection and adaptation base: ABE-7CPA11 106
Physical description of the TELEFAST 2: ABE-7CPA11 107
Characteristics of the TELEFAST base ABE-7CPA11 108
Connecting the TELEFAST 2 base: ABE-7CPA11 111
Connecting encoders with 10...30 V supply 113
Connecting encoders with 5 V supply 115
Example of the multiplexing of encoders with a 5 V supply. 117
Example of connection: each TSX CTY 2C channel is only connected to one TELEFAST. 119
Example of connection: 2 TELEFAST are connected on the same channel . . 121
Example of connection: 3 TELEFAST are connected on the same channel . . 122
Example of connection: 4 TELEFAST are connected on the same channel . . 124

Rules and precautions for wiring 126
Configuration of the TELEFAST base 129
Overview of the TSX TAP S15•• wiring accessories 134
Mounting and measurements of the TSX TAP S15 05/24 135
Connecting an encoder with a TSX TAP S15 05 accessory. 137
Connecting an encoder with a TSX TAP S15 24 accessory 138
Pre-wired strands and cable 139
Module display 141

Part II TSX CAY axis command modules 143
At a Glance 143

Chapter 5 Introduction to the TSX CAY modules 145
At a Glance 145
General 146
Physical description. 148

Chapter 6 Functions 151
At a Glance 151
Circuit diagram of an axis command 152
Command processing 153

Chapter 7 Implementing 155
At a Glance 155
7.1 General 157
At a Glance 157
Standard configuration required 158
Installation procedure 159
General precautions for wiring 160
Choice of encoders 161
Module display 163
7.2 Connecting speed reference signals 165
At a Glance 165
Signal labeling 166
Connection using TSX CAP S9. 167
Connection using TSX CDP 611 strips 168
Connection of terminals with the TELEFAST pre-wiring system. 169
Correspondence between the SUB-D connector pins and the TELEFAST terminals 171
TAP MAS connection device. 172
Connecting the variable using the TAP MAS device. 173
7.3 Connecting the counting signals 174
At a Glance 174
Connecting counting signals 175
Connecting an incremental encoder 178
Connecting an absolute SSI encoder 179

Connecting the encoder supply 180
7.4 Wiring accessories. 182
At a Glance 182
Encoder connection accessories 183
Information on FRB type 12 pin connectors. 185
TSX TAP S15 05 mounting and dimensions 187
Connecting absolute encoder // via a TELEFAST with ABE-7CPA11 adaptation189
Connecting to a NUM MDLA variable speed controller 190
7.5 Connection of sensors/ pre-actuator and supply modules, without variable speed controller 191
At a Glance 191
General 192
TELEFAST connection and wiring accessories 194
Availability of signals on TELEFAST 195
Example of connecting sensors to the auxiliary inputs and their supply. 196
Correspondence between TELEFAST terminal blocks and module HE10 connector 197
Connection using TSX CDP 301 or 501 strips. 199
Wiring precautions 200
7.6 Connecting the variable speed controller signals 202
At a Glance 202
Signal labeling 203
Connection using the TELEFAST pre-wiring system. 205
Correspondence between TELEFAST terminals and HE10 connector 206
7.7 Electrical characteristics of modules 207
At a Glance 207
General characteristics 208
Characteristics of the analog outputs. 209
Characteristics of the counting inputs 210
Characteristics of auxiliary inputs 213
Characteristics of the Q0 reflex outputs. 215
Monitoring sensor/pre-sensor voltage 217
Characteristics of the variable speed controller inputs 218
Characteristics of the relay outputs 220

Chapter 8 Appendices. 221
Compatibility of the absolute encoders with the TSX CAY modules 221

Part III Step by step axis command 223
At a Glance 223

Chapter 9 Introduction to step by step axis command 225
At a Glance 225
General 226
Physical description. 228
Standard functions 229

Chapter 10 Installation. 231
At a Glance 231
10.1 General 233
At a Glance 233
Necessary basic configuration 234
Installation procedure 235
General precautions for wiring 236
10.2 Connection of translator signals 237
At a Glance 237
Signal labeling. 238
Connection to a translator with RS 422/485 interface. 240
Connecting to a translator with NPN open collector interface. 241
10.3 Connecting sensors/pre-actuators and supply modules 242
At a Glance 242
Signal labeling. 243
Connections 244
Connecting auxiliary inputs and outputs to processor. 245
Principle of connecting I/O channel 0 246
Connection using a TSX CDP 301/501 pre-wired strand 248
Connection with TELEFAST pre-wiring system 250
Availability of signals on TELEFAST. 251
Correspondence between TELEFAST terminals and HE10 connector 252
Wiring precautions. 253
10.4 Electrical characteristics of modules 256
At a Glance 256
General characteristics 257
Characteristics of translator inputs (SUB-D connector). 258
Characteristics of translator outputs (SUB-D connector) 259
Characteristics of auxiliary inputs (HE10 connector). 260
Characteristics of Q0 brake output 262

Chapter 11 Appendix 265
At a Glance 265
Translators compatible with TSX CFY 11/21 266
Connection of Phytron translators with TSX CFY 11/21 modules. 267

Part IV TSX CCY 1128 Cam module 269
At a Glance 269

Chapter 12 Introduction to the TSX CCY 1128 electronic cam module . 271
At a Glance 271
Introduction to the TSX CCY 1128 in its environment 272
Physical introduction of the TSX CCY 1128 273
Electronic cam function of the TSX CCY 1128 275
TSX CCY 1128 compatibility with the installed base 276

Chapter 13 General instructions for installing the TSX CCY 1128 module 277
At a Glance 277
Installing the TSX CCY 1128 in a PLC station rack 278
Installing the TSX CCY 1128 in a PLC station 279
Number of application-specific channels managed by one PLC station 281
Installation precautions for the TSX CCY 1128 282
General wiring instructions 283
Selecting and protecting auxiliary power supplies 284
Choice of encoders for the TSX CCY 1128 285

Chapter 14 Connecting an incremental and absolute SSI encoder to the TSX CCY 1128 287
At a Glance 287
Principles for connecting an encoder to a TSX CCY 1128 288
Connecting an incremental encoder with RS422 outputs to the TSX CCY 1128289
Connecting an incremental encoder with Totem Pole outputs to the TSX CCY 1128 292
Connecting an absolute SSI encoder to the TSX CCY 1128 295
Connecting an encoder supply monitor to the TSX CCY 1128 298
Connecting the encoder supply to the TSX CCY 1128 300
TSX CAP S15 connection accessory 303
TSX TAP S1505/S1524 and TSX CCP S15• connection accessories 304

Chapter 15 Connecting the auxiliary inputs and track outputs of the TSX CCY 1128 309
At a Glance 309
Introduction to the connection interfaces of the TSX CCY 1128 310
Connecting the auxiliary inputs of the TSX CCY 1128 313
Connecting the track outputs of the TSX CCY 1128 321

Chapter 16 TSX CCY 1128 module displays 329
At a Glance 329
Introduction to the display block of the TSX CCY 1128 module 330
The various states of the LEDs on the TSX CCY 1128 and their meaning . . . 331

Chapter 17 TSX CCY 1128 module electrical characteristics 333
At a Glance 333
General electrical characteristics of the TSX CCY 1128. 334
Characteristics of the auxiliary inputs of the TSX CCY 1128 335
Characteristics of the encoder supply feedback monitor for the TSX CCY 1128336
Characteristics of the auxiliary inputs of the TSX CCY 1128 337
Characteristics of the track outputs of the TSX CCY 1128 338

Chapter 18 Connecting an absolute encoder with parallel outputs to TSX CCY 1128 339
At a Glance 339
Principle for connecting an absolute encoder to a TSX CCY 1128. 340
TELEFAST ABE-7CPA11 base. 341
Pinout configuration of the 15-pin SUB-D connectors of the module and the TELEFAST 344
Connecting an absolute encoder with parallel outputs 346
Wiring rules and precautions specific to the TELEFAST. 349
Configuration of the TELEFAST connector. 353

Part V SERCOS® TSX CSY 84 / 164 Modules 355
At a Glance 355

Chapter 19 Presentation of the TSX CSY 84 / 164 modules 357
At a Glance 357
Presentation of the modules in their environment. 358
Physical presentation of the modules 360
Compatibility with the installed base 362

Chapter 20 Installing the modules 363
At a Glance 363
Mounting the modules in a PLC station rack. 364
Installing the modules in a PLC station 365
Number of application-specific channels managed by a TSX CSY 84 or CSY 164 station 366
Installation precautions 367
Module displays. 368
Initialization of the module after an internal error 372
Operating mode of the TSX CSY 84/164 modules 373

Chapter 21 Description of the multi-axis control system 375
At a Glance 375
SERCOS® multi-axis control system on Premium PLCs 376
SERCOS® ring network 378

Chapter 22 Fiber optic cables 383
At a Glance 383
Pre-assembled fiber optic cables 384
Kits for creating custom fiber optic cables 385

Chapter 23 Characteristics, Standards and service conditions 387
At a Glance 387
Characteristics of the module 388
Characteristics of the SERCOS® network. 389
Standards and service conditions 390

Chapter 24 Compatible variable speed controllers 391
List of variable speed controllers 391

Index 393

About the Book

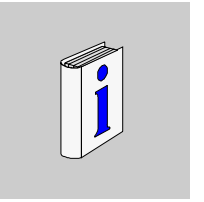

At a Glance

Document Scope

This manual introduces the installation for counting, axis command, Cam and Sercos modules.
It comprises 5 parts:

- TSX CTY 2A / 4A / 2C counting module,
- TSX CAY axis command module,
- Step by step axis command,
- TSX CCY 1228 Cam module,
- Sercos.

User Comments

We welcome your comments about this document. You can reach us by e-mail at techpub@schneider-electric.com

TSX CTY 2A / 4A /2C counting modules

I

At a Glance

Subject of this part

This Part deals with the installation of TSX CTY 2A / 4A / 2C counting modules.

What's in this Part?

This part contains the following chapters:

Chapter	Chapter Name	Page
1	Introduction to the TSX CTY 2A/ 4A /2C counting modules	17
2	Functions	23
3	Installing the counting modules	47
4	Appendices	97

Introduction to the TSX CTY 2A/ 4A /2C counting modules

1

At a Glance

Subject of this chapter

This Chapter introduces the different TSX CTY 2A / 4A / 2C counting modules.

What's in this Chapter?

This chapter contains the following topics:

Topic	Page
General	18
Physical description	20

General

Introduction

The TSX CTY 2A, TSX CTY 4A and TSX CTY 2C modules are standard format counting modules. They are used to count pulses from a sensor with a maximum frequency of 40 kHz (CTY 2A/4A) or 1 MHz (CTY 2C).

Installation of counting modules

The counting modules can be installed in any available slot of a Premium PLC configuration (TSX or PCX), on the condition that the following are used to the maximum:

- 8 "application-specific" channels in a TSX P57 103/PCX 57 203 configuration,
- 24 "application-specific" channels in a TSX P57 2•3/PCX 57 203/TSX P57 2•23 configuration,
- 32 "application-specific" channels in a TSX P57 3•3/PCX 57,353/TSX P57 3623 configuration,
- 48 "application-specific" channels in a TSX P57 453/ TSX P57 4823 configuration.

The only difference between the TSX CTY 2A and TSX CTY 4A modules is their number of channels (2 for the TSX CTY 2A and 4 for the TSX CTY 4A). They are used for upcounting, downcounting, or up/down counting functions for each channel.
The TSX CTY 2C module (2 channels) is used for the counting up/down functions, and measurements in normal or modulo mode.

Sensors used on the channels

The sensor used on each channel can be:

- a 2 or 3-wire proximity sensor, type PNP or NPN. When using a mechanical contact output, it is necessary to raise the channel's immunity in order to curb the closing bounces of the contact,
- an incremental signal encoder with 5 VDC differential outputs (encoder with RS 422/485 line transmitters),
- an incremental signal encoder with 10-30 VDC output (Totem Pole encoder),
- an absolute encoder with serial outputs, standard RS 485 interface (TSX CTY 2C only),
- an absolute encoder with parallel outputs, using the adaption TELEFAST: ABE-7CPA11 (TSX CTY 2C only).

Illustration

This diagram shows the different sensor types:

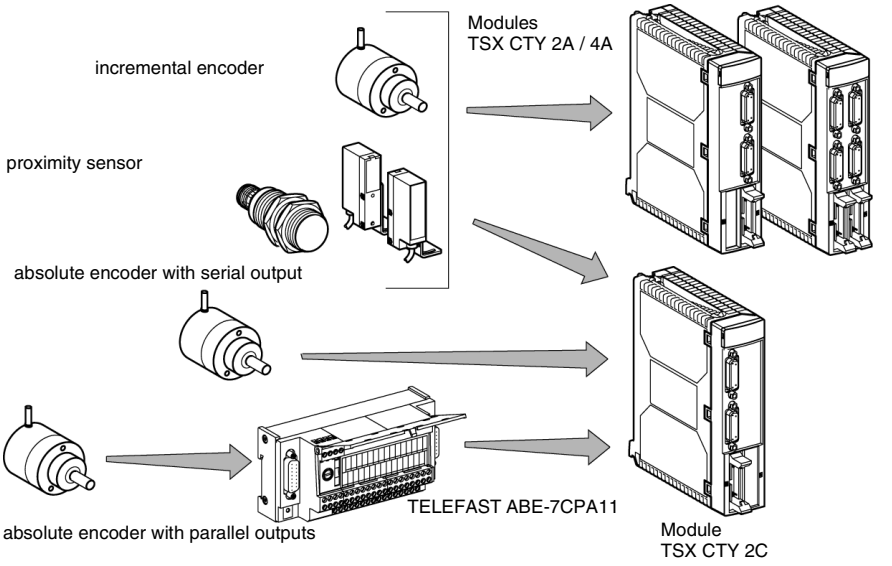

Physical description

Illustration

This diagram illustrates the TSX CTY 2A / 4A / 2C counting modules:

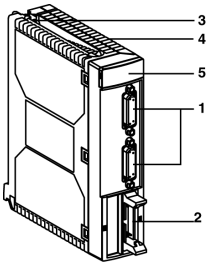

TSX CTY 2A

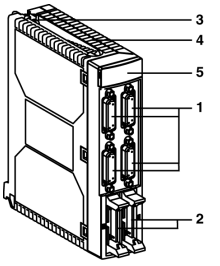

TSX CTY 4A

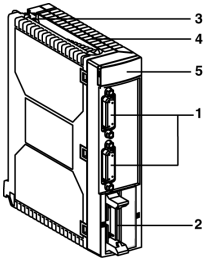

TSX CTY 2C

Number table

This table describes the modules according to the different numbers in the diagrams above:

Number	Description
1	Standard SUB D 15-pin connector for connecting: ● the relevant count sensor(s) to channels 0 and 1 for the TSX CTY 2A/2C modules, and to channels 0, 1, 2 and 3 for the TSX CTY 4A module, ● the encoder supply when using this type of sensor, ● the return encoder supply, which is used to check that the encoder is receiving the correct supply.

2	HE10 20-pin connectors, used for each channel to connect:
	● auxiliary inputs:
	  ● reset to 0 or set to the preset value,
	  ● count confirmation,
	  ● capture,
	● of auxiliary outputs,
	● external supplies:
	  ● auxiliary input and output supply,
	  ● supply of other sensors.

3	Screw for fixing module in place.
4	Rigid body, which guarantees: ● electromagnetic card support, ● locking of the module in its slot.

5	Module diagnostic LEDs:
	● module level diagnostics:
	  ● green RUN LED: indicates the operating mode of the module (operative module),
	  ● red ERR LED: indicates the internal state of the module (internal error, module broken down),
	  ● red I/O LED: indicates an external error or application fault,
	● module channel level diagnostics:
	  ● green CHx LED: indicates channel diagnostics.
	  - LED on: channel active,
	  - flashing LED: channel inactive,
	  - LED off: channel inoperative, not configured or incorrectly configured.

Functions

2

At a Glance

Subject of this chapter

This Chapter introduces the various functions of the TSX CTY 2A / 4A / 2C modules.

What's in this Chapter?

This chapter contains the following topics:

Topic	Page
Down counting function (TSX CTY 2A / 4A modules)	24
Up counting function (TSX CTY 2A / 4A modules)	25
Up/down counting function (TSX CTY 2A / 4A modules)	26
Up/down counting and measurement functions (TSX CTY 2C module)	27
Up/down counting on the TSX CTY 2A/4A modules	29
Process diagram	31
Up/down counting on the TSX CTY 2A/4A modules	32
Process diagram 1	36
Process diagram 2	37
Process diagram 3	38
Process diagram 4	39
Up/down counting and measuring on a TSX CTY 2C module	40
Process diagram 5	44
Connection process for the EPSR "supply feedback" input	45

Down counting function (TSX CTY 2A / 4A modules)

General

The down counting function allows pulses to be counted down (on 24 bits + sign) from a preset value between 0 and +16777215, and indicates when the current value is equal to or less than 0.
The format for down counting is between –16777216 and +16777215.

Illustration

diagram of the principle:

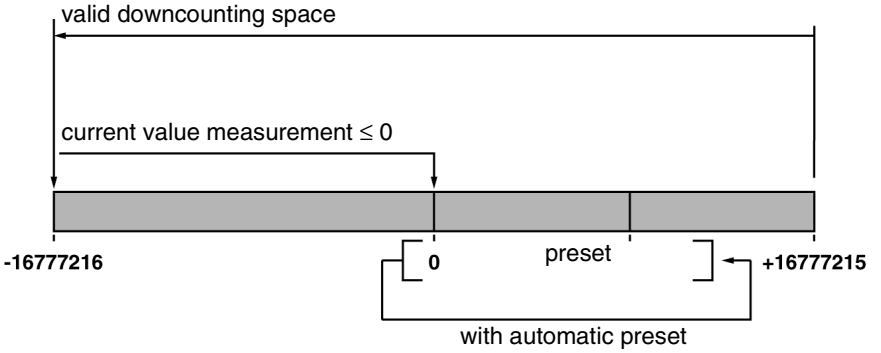

Note: Operation of the down counting function, the associated language objects, and the software installation are all described in the application manual.

Up counting function (TSX CTY 2A / 4A modules)

General

The up counting function counts pulses (on 24 bits + sign) from 0 to a predefined value known as the setpoint value.
The format for up counting is between 0 and +16777215.
The module indicates when the setpoint value has been reached.
The current count value is constantly compared to two adjustable thresholds (threshold 0 and threshold 1).

Illustration

Diagram of the principle:

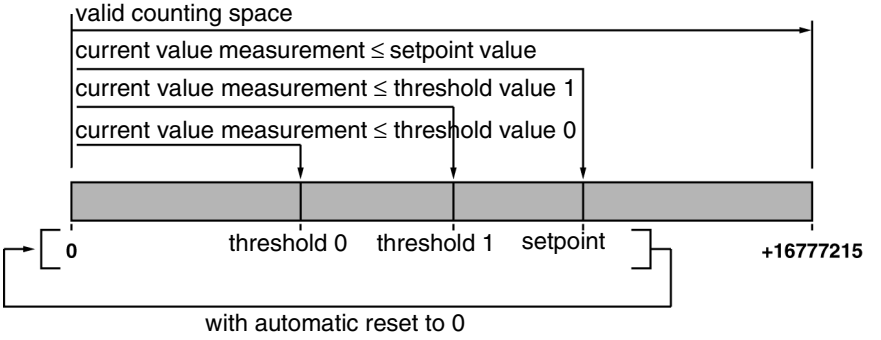

Note: Operation of the up counting function, the associated language objects, and the software installation are all described in the application manual.

Up/down counting function (TSX CTY 2A / 4A modules)

General

The up/down counting function uses one counter to execute both the up counting and down counting of pulses (on 24 bits + sign), from a preset value between –16777216 and +16777215.

This function also offers the possibility of setting several values, which cause an alert when the current value passes them, which could in turn trigger event processing:

- a low setpoint and a high setpoint,
- 2 adjustable thresholds (thresholds 0 and 1).

Illustration of the up/down counting mode

Diagram of the principle:

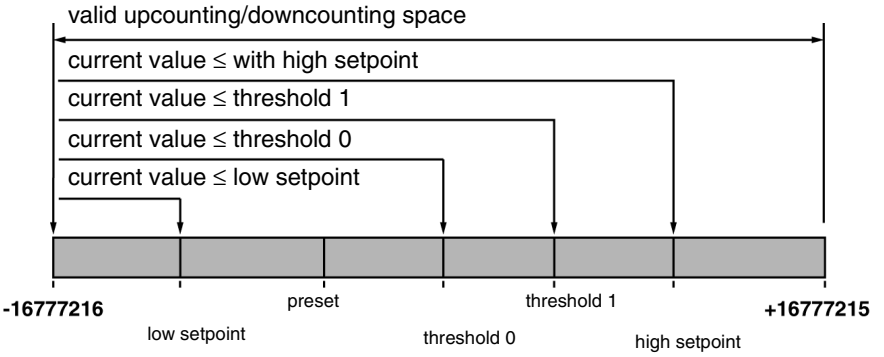

Note: Operation of the up/down counting function, the associated language objects, and the software installation are all described in the application manual.

Up/down counting and measurement functions (TSX CTY 2C module)

Up/down counting function

The up/down counting function uses one counter to execute both the up counting and down counting of pulses (on 24 bits + sign), from a preset value between –16777216 and +16777215.

Measurement function

The measurement function is used to acquire a serial frame from an absolute encoder with serial outputs.

Illustration of the up/down counting mode

Diagram of the principle:

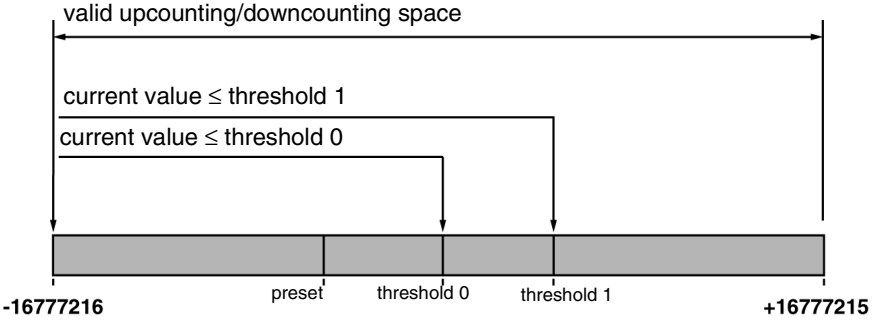

Modulo mode

The modulo mode enables up/down counting (on 25 bits) between 0 and +33554431.

Illustration of modulo mode

Diagram of the principle:

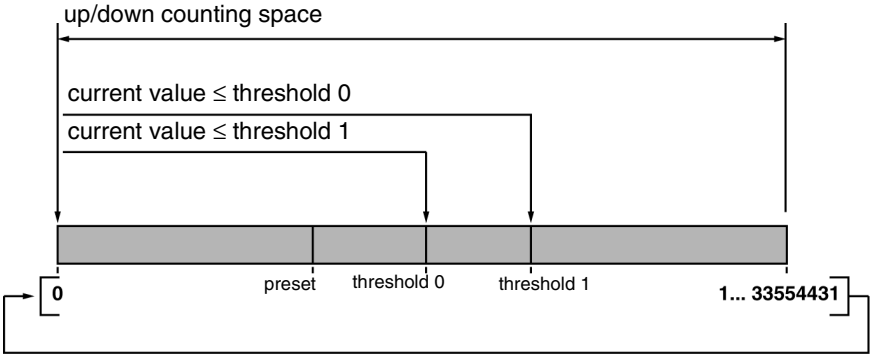

Note: The up/down counting and measurement functions also offer the possibility of setting two thresholds (thresholds 0 and 1). If the current value crosses these thresholds, this will be signaled, and will trigger event processing.

Note: Operation of the up/down counting and measurement functions, the associated language objects, and the software installation are all described in the application manual.

Up/down counting on the TSX CTY 2A/4A modules

Introduction

The TSX CTY 2A/4A counting modules are used to enable:
- 2 independent up or down counting channels (module TSX CTY 2A),
- 4 independent up or down counting channels (module TSX CTY 4A).

Up/down counting signals

The relevant up/down counting signals for a channel, as well as the encoder supply (when the sensor is an incremental encoder) are grouped together on a standard SUB D 15-pin connector. Each up/down counting channel is able to receive 5 VDC or 24 VDC signals. Pulses are received on the **IA** input.

Auxiliary inputs

24 VDC auxiliary inputs (reset to 0: for up counting, set to the preset value for down counting and for confirmation of up/down counting), as well as the external supplies, are grouped together on a HE10 connector, shared by channels 0 and 1, or 2 and 3 (TSX CTY 4A only).

- **Reset to 0** (up counting) **or preset value** (down counting)
  Resetting to zero (up counting) or setting to the preset value (down counting) can be carried out in one of the ways described below:
  - by changing the state (rising or falling edge) of the **IPress•** input (down counting) or the **IReset** input (up counting), according to the choice made during configuration,
  - by crossing the setpoint value (up counting) or 0 (down counting),
  - via software,
- **Up/down counting enable**
  The up/down count can be enabled as follows:
  - by setting the **IVal** input to 1,
  - via software.

Note: For more information on these functions, refer to the application manual.

Line check input: EPSR

This input is connected to the "return supply" output of an incremental encoder to ensure that the supply is correct.
In case of a line break on the cable carrying the encoder supply voltage, the fault generated is indicated and can be dealt with using the application program.

Counter outputs

The up counting and down counting functions include counter outputs, which can be assigned, using the program, to 2 physical reflex outputs (Q0 and Q1), located on the counting modules:

- down counting function: offers one counter output with predefined conditions for activation and deactivation:
  - activated when the current value changes to 0,
  - deactivated when the down counter reaches the preset value.
- up counting function: offers two counter outputs, the activation and deactivation conditions of which are predefined for counter output 0, and configurable for counter output 1:
  - **Counter output 0**
    - activated when it passes the setpoint value,
    - deactivated when the counter is reset to 0.
  - **Counter output 1**
    - activation and deactivation are configurable in the adjustment screen.

Physical outputs

Physical outputs Q0 and Q1 can be controlled as follows:

- in automatic mode: if the physical output is enabled, the state of the counter output is also applied to the physical output (counter output 0 controls physical output 0, counter output 1 controls physical output 1). If the physical output is not enabled, it is set at 0,
- in manual mode: the state of the physical output is controlled manually.

Note: For more information on the installation of the counter outputs and physical outputs, refer to the application manual.

Process diagram

Illustration

The 15-pin SUB-D connector is used to wire one single counting channel (e.g. channel 0), while the HE10 connector is shared by 2 channels (e.g. channels 0 and 1). Other channels or pairs of channels are wired in exactly the same way.

Standard 15-pin SUB-D connector to link up counting sensor

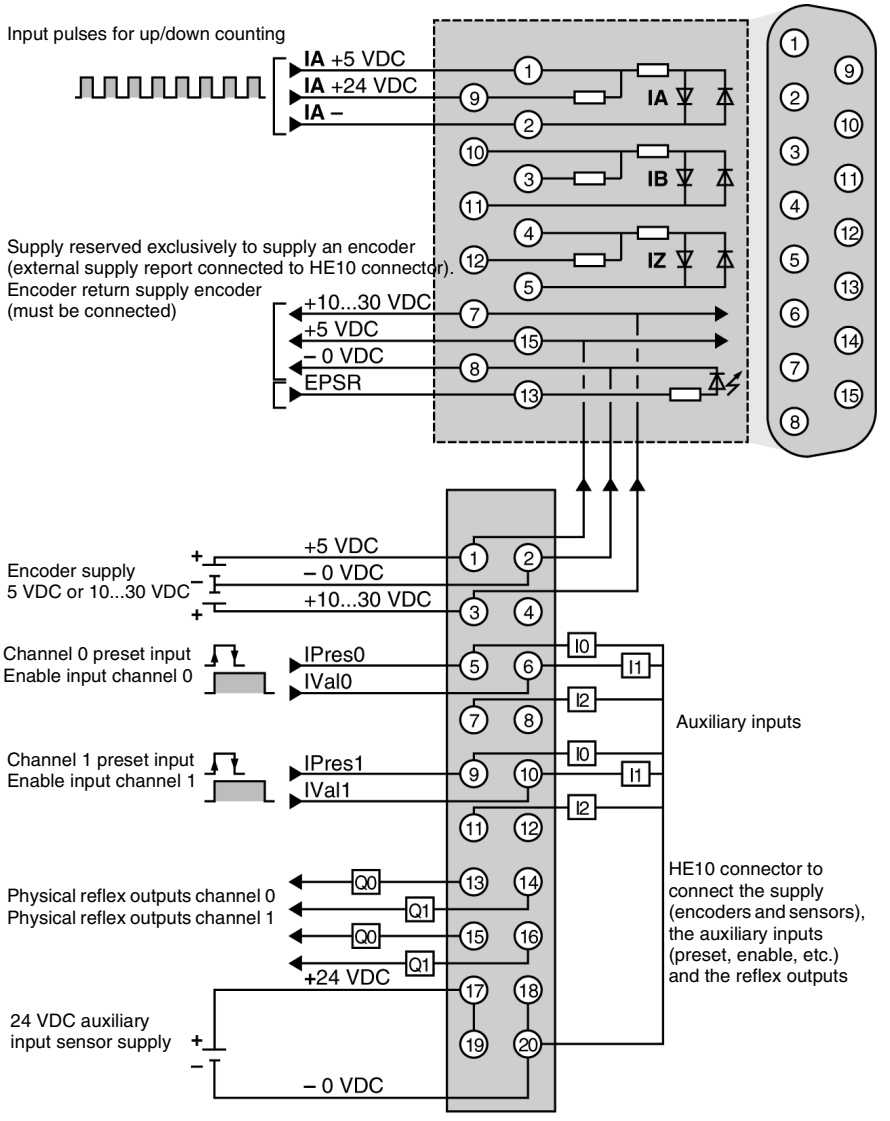

Up/down counting on the TSX CTY 2A/4A modules

Introduction

The TSX CTY 2A/4A counting modules are used to enable:
- 2 independent up/down counting channels (TSX CTY 2A),
- 4 independent up/down counting channels for the TSX CTY 4A module.

Up/down counting signals

Up/down counting on one channel can occur in many ways:
- using one physical input for up counting and one for down counting. The pulses for up counting are received at the **IA** input, and the pulses for down counting at the **IB** input.

Note: All pulses at the IA and IB inputs are counted, whatever the synchronism of the signals.

- using one physical input for up/down counting and one for the count direction (up counting or down counting). Pulses for up/down counting are received at the **IA** input and the direction (up counting or down counting) is determined by the state of the **IB** input (up counting for state 0, down counting for state 1),

Note: During up counting, the pulses at the IA input are only counted if the IB input has been at 1 for more than 3 µs.
During down counting, the pulses at the IA input are not counted if the IB input has been set at 0 for more than 3 µs.

- using one physical input for up/down counting, and the application to determine the direction (the 0 or 1 setting of a bit). Pulses for up/down counting are received at the **IA** input,
- using two physical entries with signals out-of-phase by π/2 (incremental encoder signals). Counting signal A is received at the **IA** input, and counting signal B at the **IB** input,

Auxiliary inputs

The 24 VDC auxiliary inputs and the external supplies are grouped together using a HE10 connector, shared by two channels: Channels 0 and 1 or 2 and 3 (TSX CTY 4A only). The connector comprises the following signals: preset value setting **IPres**, up/down counting confirmation **IVal**, capture of the current value **ICapt**.

- **Preset**
  the preset can be performed in any of the ways described below:
  - when changing the state (rising or falling edge) of the **IPres•** input and the software confirmation,
  - on the rising edge of the **IPres•**input if the counting direction is positive or on the **IPres•**falling edge if the count direction is negative, with software confirmation,

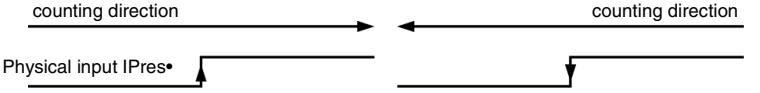

  - on the rising edge of the **IPres•**input if the direction is down counting (negative) or on the falling edge of the **IPres•**input if the count direction is positive, with software confirmation,

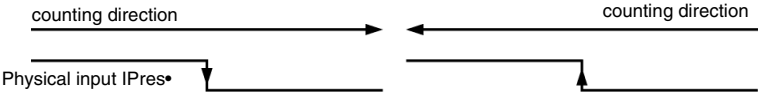

  - when the **IPres•** input is in state 1, with software confirmation. The current value will not change while the input is in state 1,
  - at reference point short cam:
    the preset is taken into account:
    - if the direction is up counting (positive): the **IPres•** input is in state 1 and the rising edge of the IZ input is top-turn, with software confirmation,
    - if the direction is down counting (negative): the **IPres•** input is in state 1 and the falling edge of the IZ input is top-turn, with software confirmation,

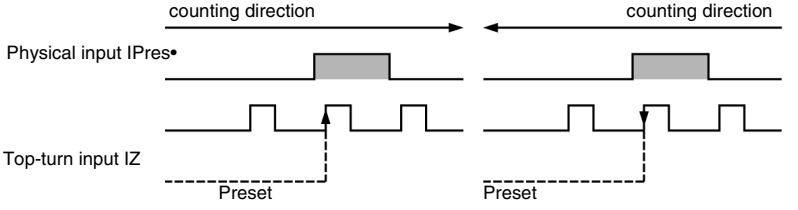

Comment
In theory, as the short cam is lower than an incremental encoder turn, the top-turn only happens once in the cam.
If however several encoder turns occur in the cam, the last active edge of the top-turn signal triggers a preset.

- at reference point long cam:
  the inclusion of the preset occurs on the first rising edge of the IZ top-turn input after the **IPres•** input has reached state 0, in an ascending or descending direction, and with software confirmation,

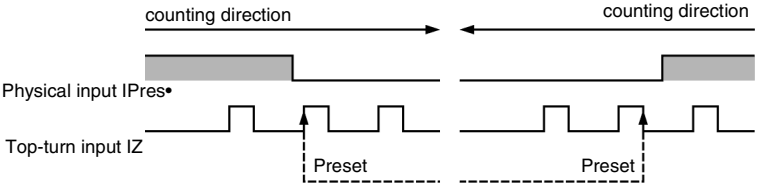

  - directly, using the software.
- **Up/down counting confirmation**
  The confirmation of up counting or down counting occurs in any of the ways described below:
  - by setting the **IVal** input to 1,
  - directly, using the software.
- **Capture**
  The capture of the current value occurs in any of the ways described below:
  - when changing the state (rising or falling edge) of the **ICapt** input, with software confirmation,
  - directly, using the software.

Note: For more information on these functions, refer to the application manual.

Line check input: EPSR

This input, which is normally connected to the "supply feedback" output of an encoder is used to control the encoder supply and ensure that it is correct.
In case of a line break on the cable carrying the encoder supply voltage, the error generated is indicated and can be dealt with using the application program.

Counter outputs

The up/down counting function comprises two counter outputs, which can be assigned, using the program, to the physical reflex outputs (Q0 and Q1), located on the counter module.
These two counter outputs have conditions for their activation and deactivation, which are defined by the user using an encoding matrix, accessible in the adjustment function.

Physical outputs

Physical outputs Q0 and Q1 can be controlled as follows:

- in automatic mode: if the physical output is enabled, the state of the counter output is also applied to the physical output (counter output 0 controls output Q0, counter output 1 controls output Q1).
  If the physical output is not enabled, it is set to 0.
- in manual mode: the state of the physical output is controlled manually.

Note: For more information on the installation of the counter outputs and physical outputs, refer to the application manual.

Note: The diagrams on the following pages show the cabling process for a 15-pin SUB-D connector (one channel). Cabling is identical for the other channels.
The HE10 connector does not appear in process diagrams 2 to 4, as its cabling is identical to that shown in process diagram 1.

Process diagram 1

Illustration

Using a physical up/down counting input, and determining the direction (up counting or down counting) with the application.

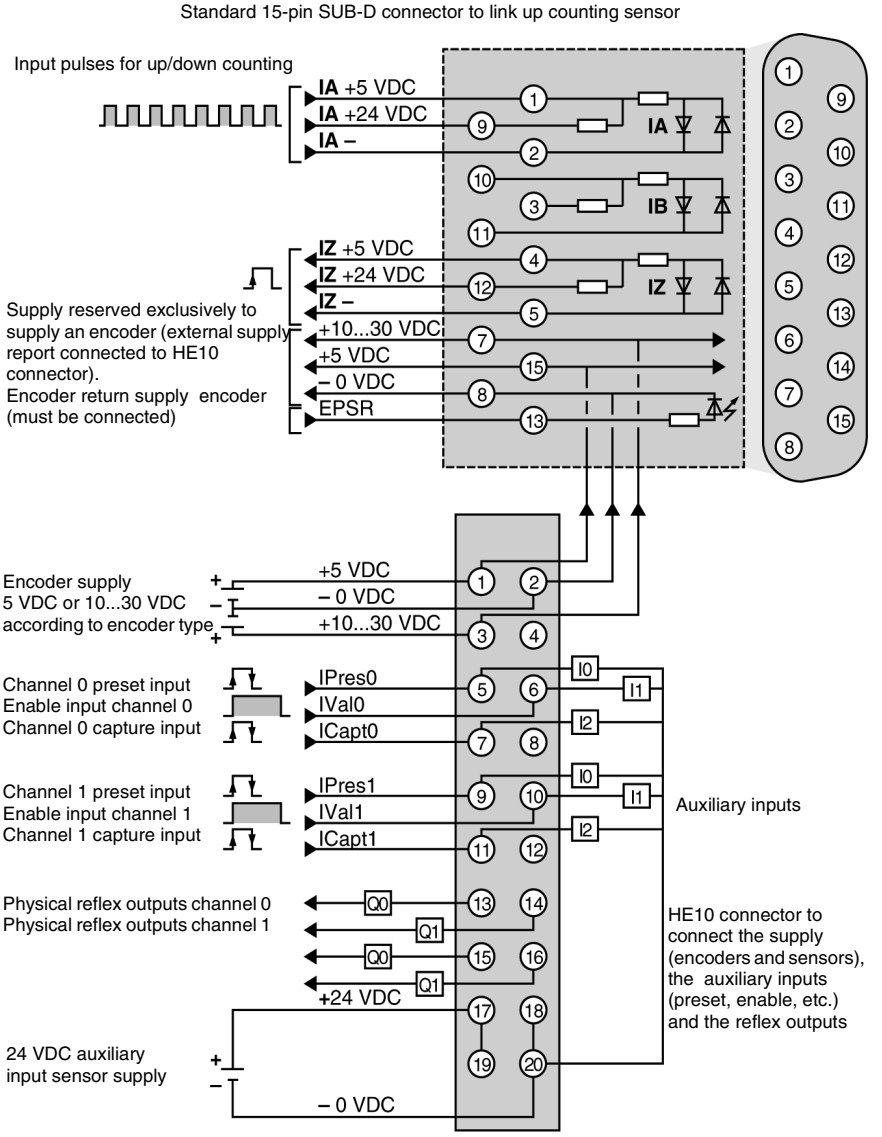

Process diagram 2

Illustration

Using one physical input for up/down counting and one for the count direction (up counting or down counting).

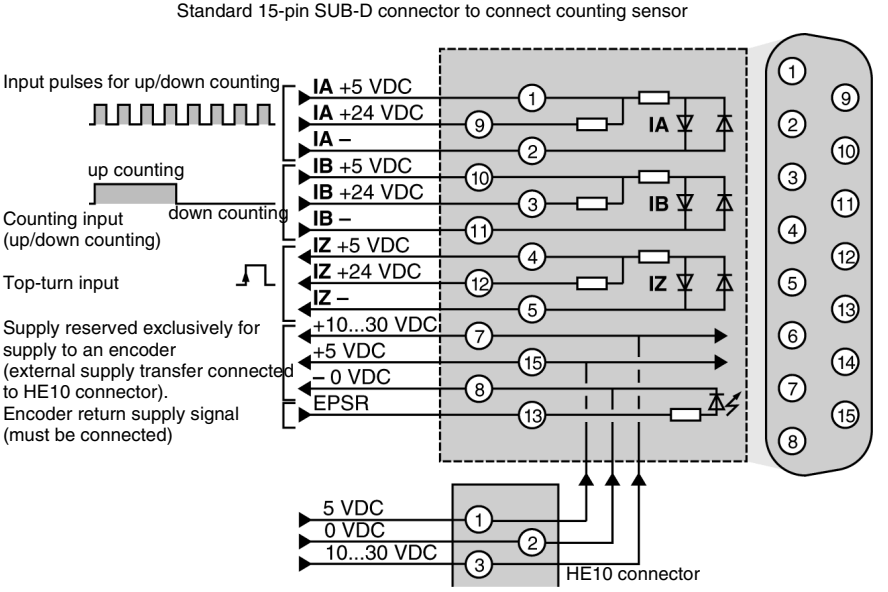

Process diagram 3

Illustration

Using one physical input for up counting and one for down counting.

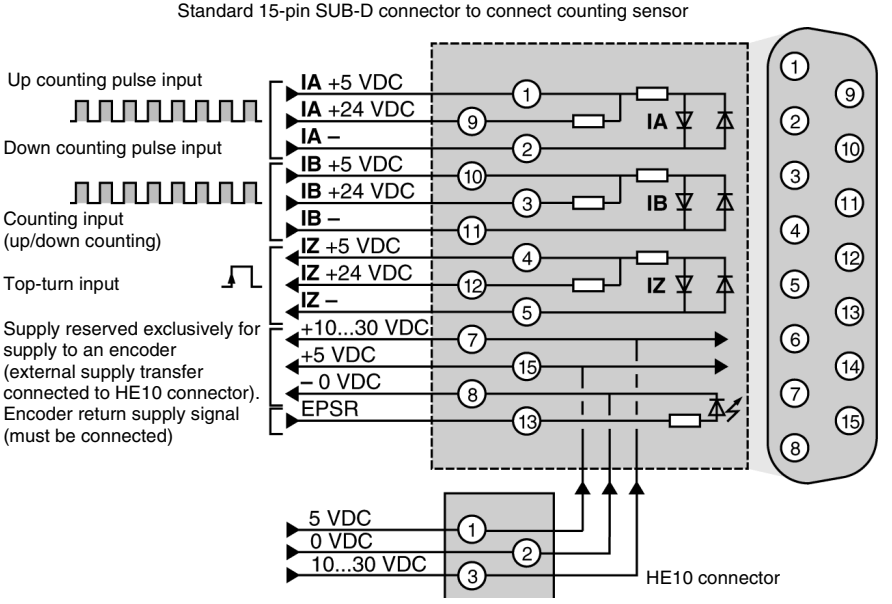

Process diagram 4

General

Using two physical inputs to cable one incremental encoder with signals out-of-phase by $\pi/2$. The option to multiply by 4 improves the resolution of the encoder :

- multiplying by 1: up/down counting occurs at the rising edges of the IB input,
- multiplying by 4: up/down counting occurs on all rising and falling edges of both IA and IB inputs.

Illustration:

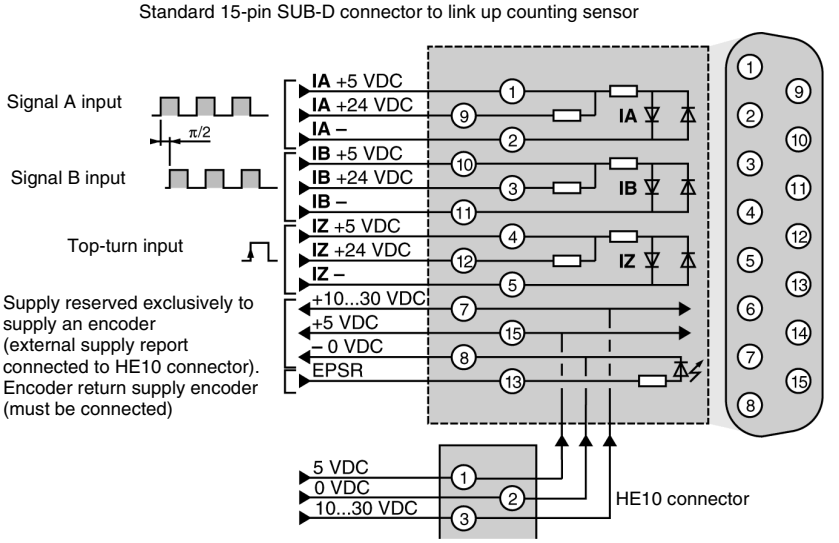

Up/down counting and measuring on a TSX CTY 2C module

Introduction

The TSX CTY 2C counter module is used to enable 2 independent up/down counting and measuring channels (absolute encoder interface).

Up/down counting (mechanical contacts, proximity sensor, pulse generators, incremental encoders)

Up/down counting on one channel can be performed in many ways:

- using one physical input for up counting and one for down counting. The up counting pulses are received at the **IA** input, and the down counting pulses at the **IB** input.
- using one physical input for up/down counting and one for the direction (up counting or down counting). Up/down counting pulses are received at the **IA** input and the direction (up counting or down counting) is determined by the status of the **IB** input (up counting for state 0, down counting for state 1),
- using one physical input for up/down counting, and the application to determine the direction (setting the bit to 0 or 1). Up/down counting pulses for are received at the **IA** input.
  The maximum frequency of up/down counting on each channel is 1MHz,
- using two physical entries with signals out-of-phase by $\pi/2$ (incremental encoder signals). Counting signal A is received at the **IA** input, and counting signal B at the **IB** input,
  The maximum frequency of out-of-phase signals is 500kHz (multiplied by 1) or 250kHz (multiplied by 4).

Measurement (absolute encoders)

Using one physical input for receiving series data (signals from an absolute encoder with series outputs) and one for sending the transmission clock to the encoder.

Auxiliary inputs

The 24 VDC auxiliary inputs and the external supplies are grouped together using a HE10 connector, shared by two channels. The connector comprises the following signals: preset value setting **IPres**, up/down counting confirmation **IVal**, capture of the current value **ICapt**.

- **Preset**
  the preset can be performed in any of the ways described below:
  - when changing the state (rising or falling edge) of the **IPres•** input and the software confirmation,
  - on the rising edge of the **IPres•**input if the counting direction is positive or on the **IPres•**falling edge if the count direction is negative, with software confirmation,

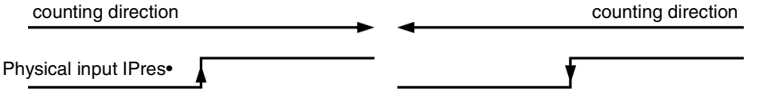

  - on the rising edge of the **IPres•**input if the direction is down counting (negative) or on the falling edge of the **IPres•**input if the count direction is positive, with software confirmation,

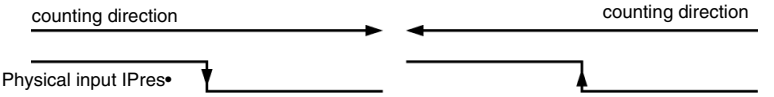

  - when the **IPres•** input is in state 1, with software confirmation. The current value will not change while the input is in state 1,
  - at reference point short cam:
    the preset is taken into account:
    - if the direction is up counting (positive): the **IPres•** input is in state 1 and the rising edge of the IZ input is top-turn, with software confirmation,
    - if the direction is down counting (negative): the **IPres•** input is in state 1 and the falling edge of the IZ input is top-turn, with software confirmation,

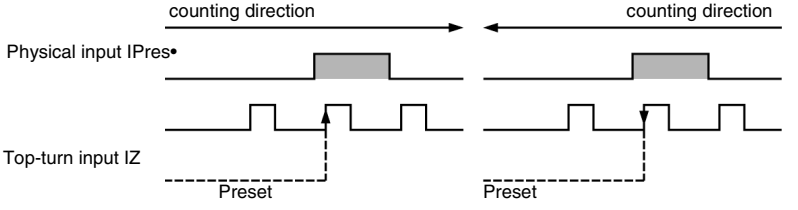

Comment
In theory, as the short cam is lower than an incremental encoder turn, the top-turn only happens once in the cam.
If however several encoder turns occur in the cam, the last active edge of the top-turn signal triggers a preset.

- at reference point long cam:
  the inclusion of the preset occurs on the first rising edge of the IZ top-turn input after the **IPres•** input has reached state 0, in an ascending or descending direction, and with software confirmation,

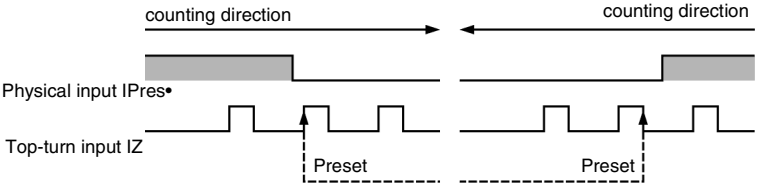

  - directly, using the software.
- **Up/down counting confirmation**
  Up counting or down counting is confirmed in any of the ways described below:
  - by setting the **IVal** input to 1,
  - directly, using the software.
- **Capture**
  The capture of the current value is performed in any of the ways described below:
  - when changing the state (rising or falling edge) of the **ICapt** input, with software confirmation,
  - directly, using the software.

Note: For more information on these functions, refer to the application manual.

Line check input: EPSR

This input, which is normally connected to the "supply feedback" output of an incremental encoder is used to monitor the encoder supply and ensure that it is correct.
In case of a short circuit or line break on the cable carrying the encoder supply voltage, the fault generated is indicated and can be dealt with using the application program.

Counter outputs

The up/down counting function comprises two counter outputs, which can be assigned to two physical reflex outputs (Q0 and Q1), located on the counter module. These two counter outputs have conditions for their activation and deactivation, which are defined by the user using an encoding matrix (30 possible combinations), accessible in the adjustment function.

Physical outputs

Each channel of the TSX CTY2C module has 4 physical outputs - Q0 and Q3.

Physical outputs Q0 and Q1, which are identical to those of the TSX CTY 2A or TSX CTY 4A modules, can be controlled as follows:

- in automatic mode: if the physical output is enabled, the state of the counter output is also applied to the physical output (counter output 0 controls output Q0, counter output 1 controls output Q1).
  If the physical output is not enabled, it is set to 0.
- in manual mode: the state of the physical output is controlled manually.
- the output Q2 can only be controlled in manual mode.

The Q3 output is a configurable input/output. It can be used in **programmable frequency** mode, in order to provide an external synchronization loop on several channels of several counter modules.

When using an absolute encoder(s) with parallel outputs, with a TELEFAST ABE-7CPA11 adapter, it is possible to use the Q2 and Q3 outputs as discrete outputs, which are used to address this (these) encoder(s).

Note: For more information on the installation of the counter outputs and physical outputs, refer to the application manual.

Note: The diagrams showing the cabling process for a 15-pin SUB-D connector (one channel) are identical to those for up/down counting with a TSX CTY 2A/4A module (process diagrams 1 to 4). These diagrams are completed by process diagram 5 (below), which includes cabling for an absolute encoder with series outputs, or with parallel outputs, using a TELEFAST ABE-7CPA11 adapter.

Process diagram 5

Illustration

Using one physical input to receive serial data and one to send data from the encoder transmission clock to the absolute SSI encoder.

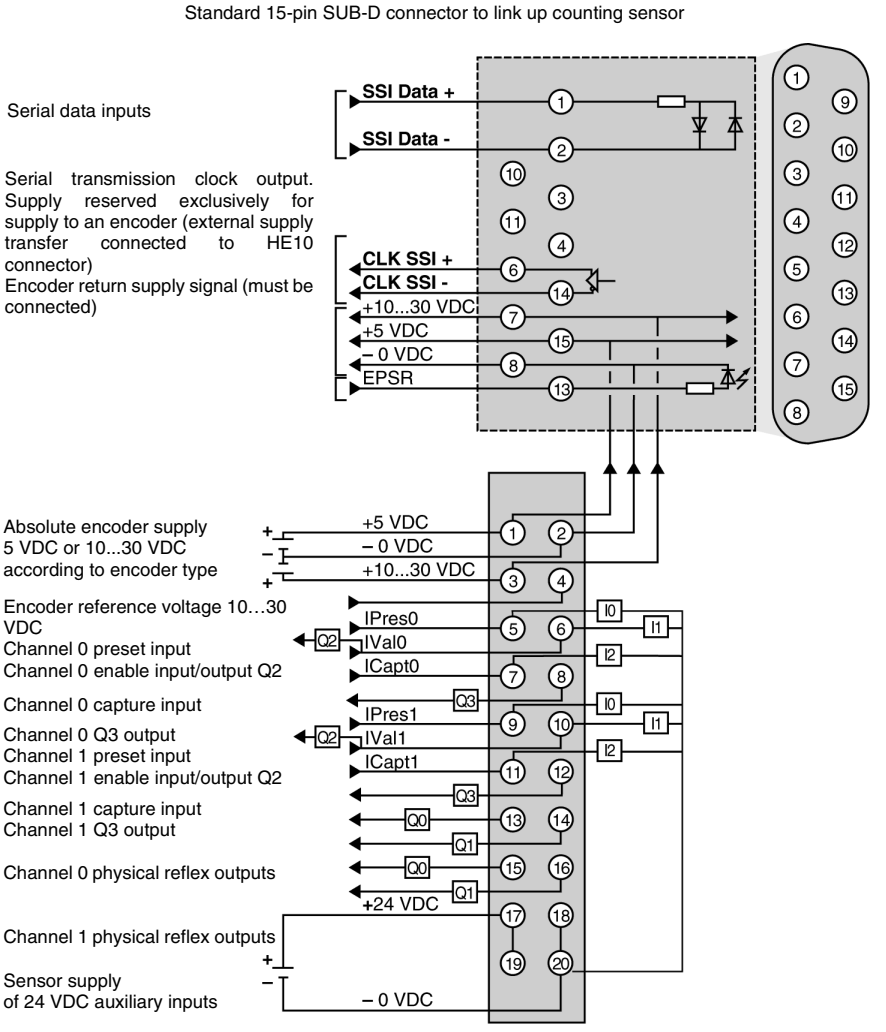

HE10 connector to connect thesupplies (encoders and sensors), the auxiliary inputs (reset, enable etc.)and the reflex outputs.

Connection process for the EPSR "supply feedback" input

Introduction

This input must be connected.
The connection method of this input depends on the encoder type used.

Incremental encoder with a "supply feedback" output

the EPSR input is connected to the encoder's "supply feedback" output:

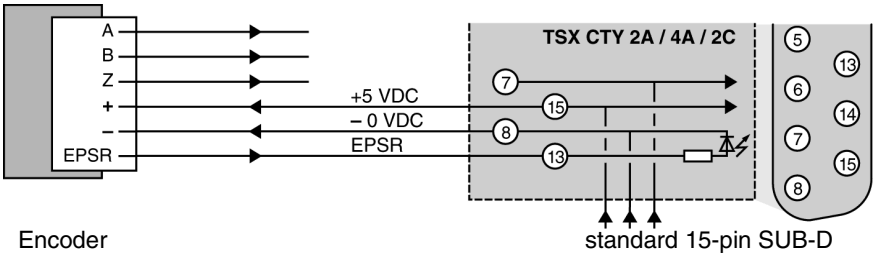

Absolute encoder with serial outputs and an encoder "supply feedback" output

the EPSR input is connected to the encoder's "supply feedback" output:

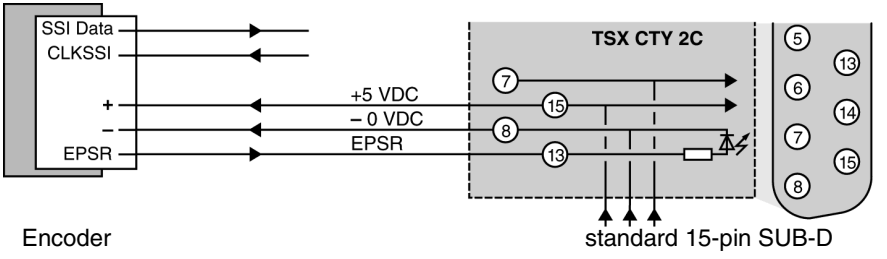

Incremental encoder with no "return supply" output

the EPSR input is connected to the + encoder supply at the encoder:

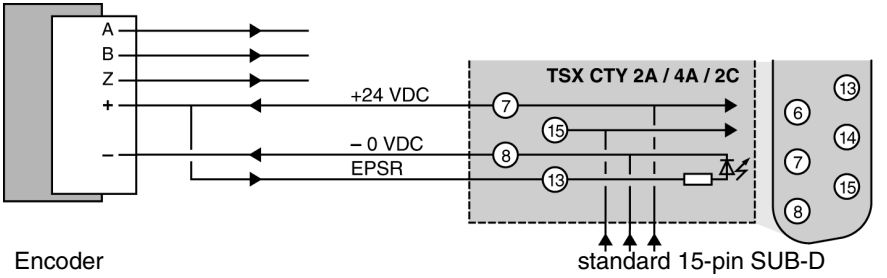

Absolute encoder with serial outputs with no "supply feedback" output

the EPSR input is connected to the + encoder supply at the encoder:

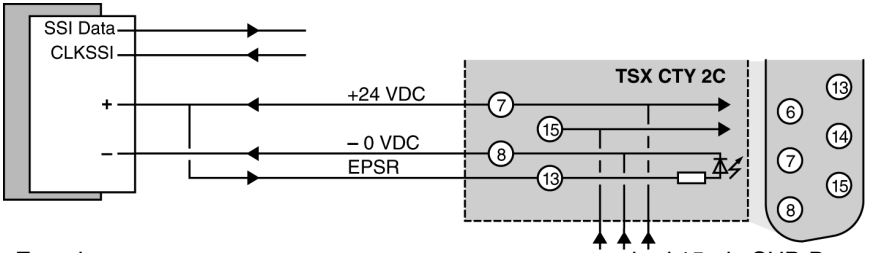

Inductive proximity sensor

- the EPSR input is connected to the + supply of the count sensors,
- the –0 VDC output is connected to the - supply of the count sensors.

Illustration:

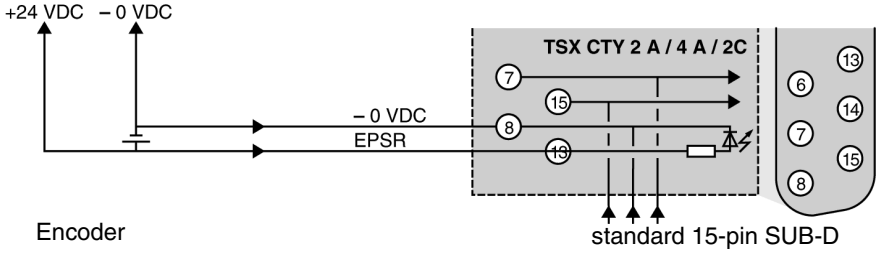

Comment

If the sensor is not equipped with a "supply feedback" output, it is possible not to cable the EPSR input of a TSX CTY 2C module. In this case, it is recommended to hide the "encoder supply or proximity sensor" fault.

Note: For more information on these functions, refer to the application manual.

Installing the counting modules

3

At a Glance

Subject of this chapter

This Chapter deals with the installation of TSX CTY 2A / 4A / 2C counting modules.

What's in this Chapter?

This chapter contains the following topics:

Topic	Page
Maximum number of counting modules	49
Types of sensor that can be used on counter inputs	51
General counting module characteristics	52
Counter input characteristics (TSX CTY 2A / 4A)	53
TSX CTY 2A/4A: Characteristics of use on 5 VDC/24 VDC	54
Counter input characteristics (TSX CTY 2C)	55
TSX CTY 2C: Characteristics of use on 5 VDC/24 VDC	56
Compatibility of IA, IB and IZ inputs	57
Count sensor supply monitor characteristics (encoder or proximity sensor)	58
Auxiliary input characteristics (preset, confirmation, capture)	59
Auxiliary output characteristics	61
15-pin SUB-D connectors Standard for a TSX CTY 2A / 4A module	63
15-pin SUB-D connectors Standard for a TSX CTY 2C module	66
HE10 20-pin connector of a TSX CTY 2A/4A module	69
20-pin HE10 connector of a TSX CTY 2C module	72
Principle for connecting counter proximity sensors	75
Connecting counter sensors and their supply	76
Wiring precautions	78
Process for connecting encoder count sensors	80
Connecting an encoder to a TSX CTY 2A / 4A / 2C module	81

Topic	Page
Example of connecting an incremental encoder with Totem Pole outputs	83
Example of connecting an incremental encoder with NPN open collector outputs.	85
Example of connecting an incremental encoder with PNP open collector outputs	87
Example of connecting an absolute encoder with a serial output or parallel outputs, via ABE-7CPA11 adapted TELEFAST (only TSX CTY 2C module)	89
Principle for connecting sensors onto auxiliary I/O	91
Connecting sensors and their supply	93
General rules for implementation	94

Maximum number of counting modules

Introduction

The TSX CTY 2A/4A/2C counting modules can be installed in any available slot of a Premium PLC configuration (TSX or PCX), providing that the maximum number of channels, as detailed in the following tables, is not exceeded:
This table shows the number of channels according to the processors:

Processor	**Number of "application-specific" channels managed**
TSX P57 103	8
TSX P57 153	8
TSX P57 203 / PCX 57 203 / TSX P57 2•23	24
TSX P57 253	24
TSX P57 2623 / TSX P57 2823	24
TSX P57 303	32
TSX P57 353 / PCX 57 353 / TSX P573623	32
TSX P57 453 / TSX P57 4823	48

Note: The term "application-specific" applies to all channels on an application-specific module (counting module, axis command module etc.).
The TSX CTY 2A/C modules comprise 2 "application-specific" channels, and the TSX CTY 4A module comprises 4 "application-specific" channels. Only the configured channels are included.

Example

It is possible to install 12 TSX CTY 2A/2C modules or 6 TSX CTY 4A modules with all channels configured into the configuration of a TSX P57 203 processor. These modules can be installed in any position on the main rack, or on the 7 extension racks.

Illustration: Example of configuration:

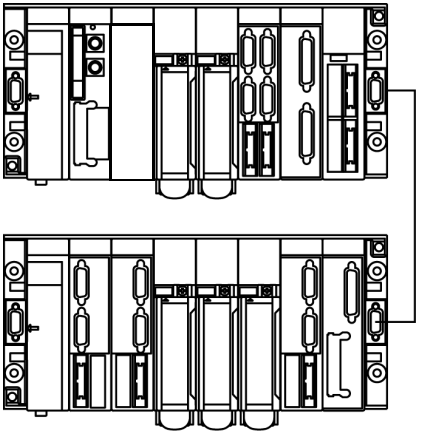

Types of sensor that can be used on counter inputs

General

The counter inputs of TSX CTY 2A/4A/2C modules can receive pulses generated by:

- PNP / NPN type 2 / 3-wire proximity sensors,
- incremental encoders with 5 V differential output signals and RS 422/485 line transmitters, on a 10-30 V supply,
- incremental encoders with 5 V differential output signals and RS 422/485 line transmitters, on a 5 V supply, incremental encoders with 10-30 V output signals and Totem Pole, on a 10-30 V supply,
- an absolute encoder with SSI serial outputs, RS 485 standard interface (TSX CTY 2C only),
- absolute encoders with parallel outputs and a TELEFAST ABE7CPA11 adapter (TSX CTY 2C only).

Illustration

This diagram shows the different types of incremental encoder:

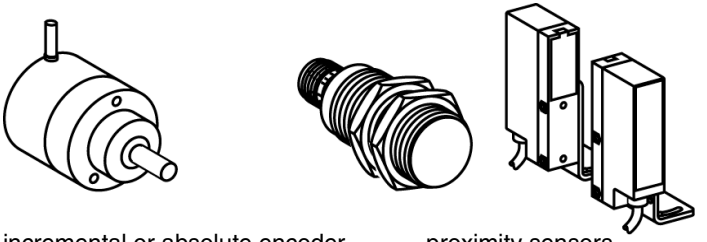

incremental or absolute encoder proximity sensors

General counting module characteristics

General This table shows the characteristics of counting modules:

Modules			**TSX CTY 2A**	**TSX CTY 4A**	**TSX CTY 2C**
Maximum frequency at the counter inputs			40 kHz	40 kHz	1 MHz
Current used by the module	5 V internal	Typical maximum	280 mA 330 mA	330 mA 470 mA	850mA (*) 1A (*)
	24V sensors/pre-actuators	Typical maximum	30 mA 60 mA	36 mA 72 mA	15 mA 18 mA
Power dissipated in the module		Typical maximum	4.5 W 6 W	8 W 11.5 W	7 W 10 W
Sensor/pre-actuator supply monitoring			Yes	Yes	Yes
Operating temperature			0 to 60°C	0 to 60°C	0 to 60°C
Dielectric rigidity of inputs/ground or internal logic and inputs			1000 V efficient – 50/60 Hz/min		
Insulation resistance			> 10 MΩ under 500 VDC		
Hygrometry			5% to 95% without condensation.		
Storage temperature			-25° to +70°C		
Operating altitude			0 to 2000m		

(*) with operating ventilator.

Counter input characteristics (TSX CTY 2A / 4A)

Characteristics for RS 422 C use

Example diagram for each counter input IA, IB and IZ:

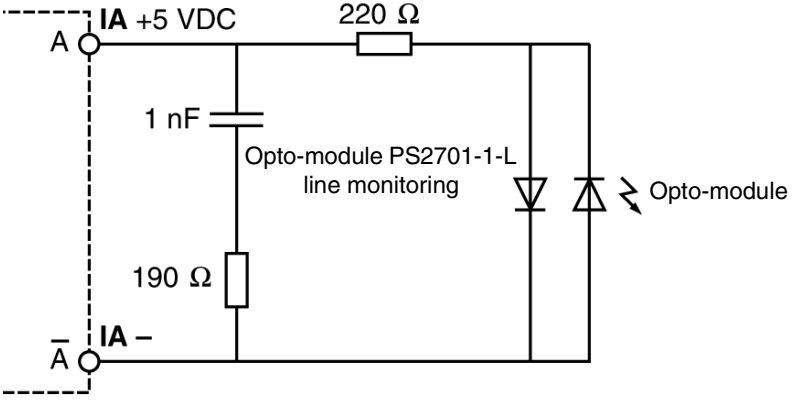

The IA, IB and IZ input used in RS 422 are entirely compatible with the line transmitters of incremental encoders with RS 422 outputs, and also with encoders complemented by pushpull, on a 5 V supply. A check for line breaks is executed on each input.

TSX CTY 2A/4A: Characteristics of use on 5 VDC/24 VDC

General

This table shows the characteristics of use on 5 VDC/24 VDC:

Input			**5 VDC counts (IA/IB/IZ)**	**24 VDC counts (IA/IB/IZ)**
Logic			Positive	Positive or negative
Nominal values	Voltage		5 V	24 V
	Current		18 mA	18 mA
	Sensor supply (ripple included)		-	19...30 V (possible up to 34 V, limited to 1hr in 24)
Thresholds	Voltage		≤ 5.5 V	34 V (1hr in 24)
	In state 1	Voltage	≥2.4	≥11 V
		Current	> 3.7 mA (1)	> 6 mA (2)
	In state 0	Voltage	≤ 1.2 V	≤ 5 V
		Current	< 1 mA (3)	< 2 mA (4)
Input impedance for nominal U			400Ω	1.4kΩ
Input impedance for U = 2.4 V (RS 422 compatible)			> 270Ω	-
Response time			Maximum permitted frequency 40 kHz	
Type of inputs			Resistive	Resistive
IEC 1131 conformity			-	Type 2
2-wire proximity sensor compatibility (5)			-	Yes
3-wire proximity sensor compatibility (5)			-	Yes

(1) for U = 2.4 V, (2) for U = 11 V, (3) for U = 1.2 V, (4) for U = 5 V
(5) see compatibility of sensors with type 1 and 2 inputs.

Counter input characteristics (TSX CTY 2C)

General

Example diagram of input IA:

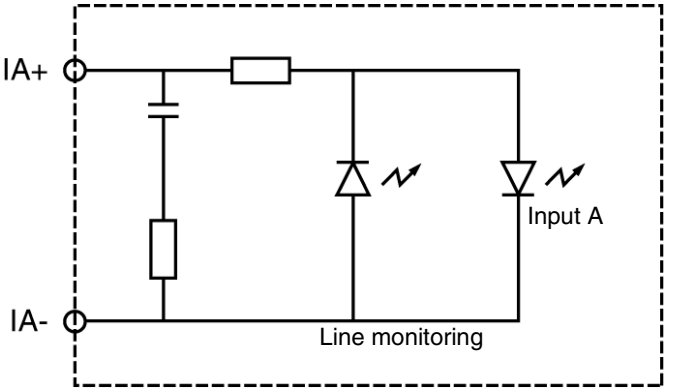

TSX CTY 2C: Characteristics of use on 5 VDC/24 VDC

General

This table shows the characteristics of use on 5 VDC/24 VDC:

Input			**5 VDC counts (IA/IB/IZ) or measurements (SSI data)**	**24 VDC counts (IA/IB/IZ)**
Logic			Positive	Positive or negative
Nominal values	Voltage		5 V	24 V
	Current		18 mA	16 mA
	Sensor supply (ripple included)		-	19...30 V (possible up to 34 V, limited to 1hr in 24)
Thresholds	Voltage		≤ 5.5 V	34 V (1hr in 24)
	In state 1	Voltage	≥2.4 V	≥11 V
		Current	> 3.6 mA (1)	> 6 mA (2)
	In state 0	Voltage	≤ 1,2 V	≤ 5 V
		Current	< 1 mA (3)	< 2 mA
Input impedance for nominal U			270Ω	1.5kΩ
Response time Maximum permitted frequency for: ● Counting pulses, ● Incremental encoders, ● absolute SSI encoders and with parallel outputs (with a TELEFAST ABE-7CPA11 adapter)			1 MHz 500 kHz multiplied by 1 and 250 kHz multiplied by 4 SSICLK transmission clock: 150 kHz…1 MHz	
Type of inputs			Resistive	Resistive
IEC 1131 conformity			-	Type 2
2-wire proximity sensor compatibility (3)			-	Yes
3-wire proximity sensor compatibility (3)			-	Yes

(1) for U = 2.4 V, (2) for U = 11 V,
(3) see compatibility of sensors with type 1 and 2 inputs.

Compatibility of IA, IB and IZ inputs

Illustration 1 RS 422 / RS 485 line transmitter outputs, 7 mA current loop Differential line monitor on each input.

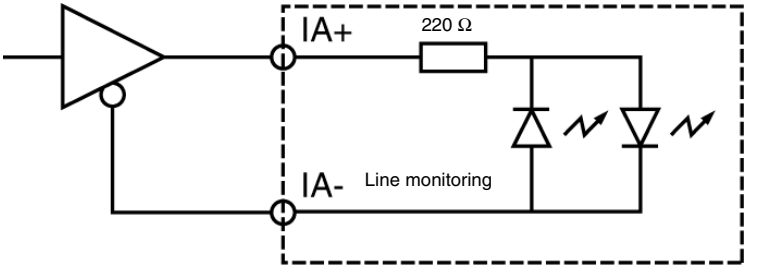

Illustration 2 Additional Totem Pole outputs, 5 V supply. Differential line monitor on each input.

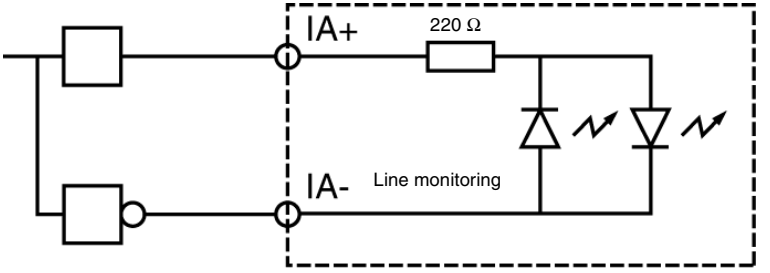

Count sensor supply monitor characteristics (encoder or proximity sensor)

Process diagram Illustration:

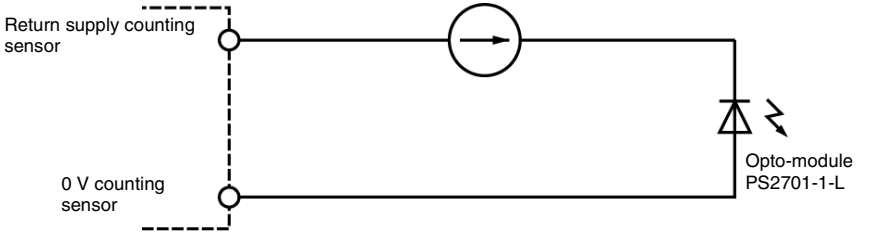

Characteristics This table shows the characteristics according to the modules:

Modules		**TSX CTY 2A / 4A**	**TSX CTY 2C**
Voltage with no proximity sensor or encoder supply fault	5 V supply	> 2.5 V	> 3.75 V
	10…30 V supply	> 2.5 V	> 3.75 V if the 10…30 V encoder reference voltage input is **not wired** (pin 4 of the HE10 connector).
			> 80% of the encoder or proximity sensor supply voltage, if a 10…30 V encoder reference voltage input is **wired** (pin 4 of the HE10 connector).
Current **with** detection of a proximity sensor or encoder supply fault		< 0.5 mA	/
Thresholds	Voltage	30 V (possible up to 34 V, limited to 1hr in 24)	
	Current	< 3 mA	< 3 mA

Note: If the sensor is not equipped with a "supply feedback" output, it is possible not to wire the EPSR input of a TSX CTY 2C module. In this case, it is recommended to hide the "encoder supply or proximity sensor" fault.

Note: For more information on these functions, refer to the application specific manual.

Auxiliary input characteristics (preset, confirmation, capture)

General This table shows the characteristics of use on 5 VDC/24 VDC:

Modules			**TSX CTY 2A / 4A**	**TSX CTY 2C**
Logic			Positive	Positive or negative
Nominal values	Voltage		24 VDC	24 VDC
	Current		7 mA	8 mA
	Sensor supply (ripple included)		19...30 V (possible up to 34 V, limited to 1hr in 24)	
Thresholds	In state 1	Voltage	≥11 V	≥11 V
		Current	> 6 mA (1)	> 6 mA (1)
	In state 0	Voltage	≤ 5 V	≤ 5 V
		Current	< 2 mA	< 2 mA
Sensor/pre-actuator voltage check threshold		OK	> 18 V	> 18 V
		Fault	< 14 V	< 14 V
Sensor/pre-actuator voltage check response time		With a loss of 24V	< 2.5ms (4)	< 2.5ms (4)
		With an increase of 24V	< 10 ms (4)	< 10 ms (4)
Input impedance			3.4kΩ	3.4kΩ
Response time		State 0 to 1	< 250 µs (3)	< 25 µs (3)
		State 1 to 0	< 250 µs (3)	< 50 µs (3)
Type of inputs			Current ducts	Resistive
IEC 1131 conformity			Type 2	Type 2
2-wire proximity sensor compatibility (3)			Yes (all 2-wire proximity sensors at 24 VDC)	
3-wire proximity sensor compatibility (3)			Yes (all 3-wire proximity sensors at 24 VDC)	

(1) for U = 11 V,
(2) see compatibility of sensors with type 1 and 2 rapid inputs,
(3) the auxiliary inputs are rapid inputs (response time < 50 µs or < 250 µs) dependent on the maximum permitted frequency (1 MHz or 40 kHz) of the counter inputs,
(4) with the loss of the sensor supply voltage, the rapid auxiliary inputs can be taken into account.

Note: If the auxiliary inputs/outputs remain unused on one TSX CTY 2C module, it is possible not to wire the auxiliary supply. In this case, it is recommended to hide the "auxiliary I/O supply" fault.

Note: For more information on these functions, refer to the application manual.

Illustration

The auxiliary inputs use a 24 V supply provided via the connector.
Diagram of the TSX CTY 2A/4A:

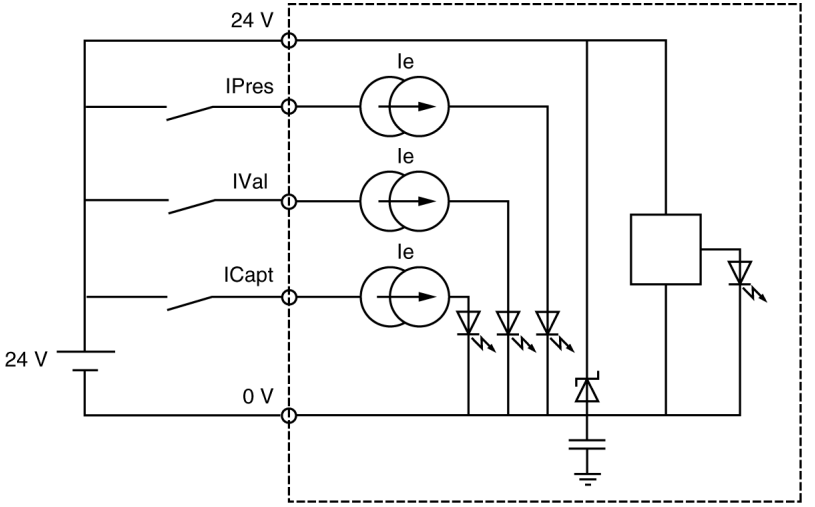

Auxiliary output characteristics

Diagram

Illustration:

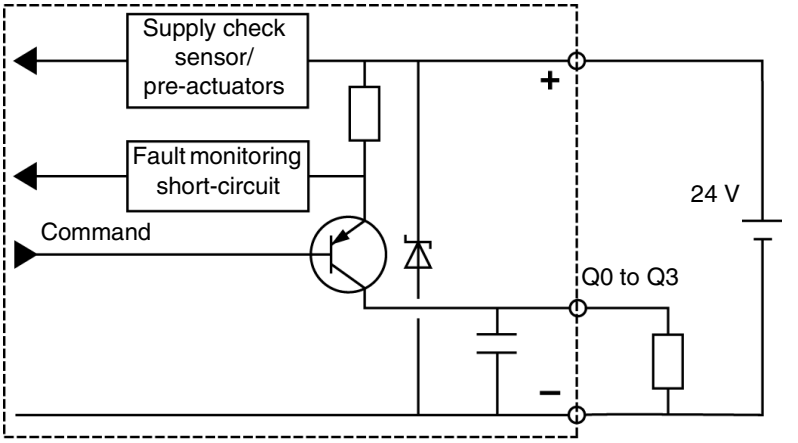

Characteristics

Table of characteristics:

Modules	**TSX CTY 2A / 4A**	**TSX CTY 2C**
Nominal voltage	24 VDC	24 VDC
Voltage limit	19...30 V (possible up to 34 V, limited to 1hr in 24)	
Nominal current	500 mA	500 mA
Waste voltage	< 0.5 V	< 0.5 V
Leakage current	< 0.1 mA	< 0.1 mA
Max current to 30 V and to 34 V	625 mA	625 mA
Switching time	< 250 µs	< 250 µs
Dielectric rigidity with the ground connection	1500 V eff 50/60 Hz per mn	
Compatibility with direct current inputs	All positive logic inputs whose input resistance is < 15 kΩ	
Compliance with IEC 1131-2	Yes	Yes
Protection against overloads and short-circuits	Using current limiter and thermal circuit breaker (0.7A<id<2A)	
Monitoring short-circuits of each channel's outputs	One signaling bit per channel	
Configurable reset: • **manual (using the application program),** • **automatic**	One configuring bit per channel	
Protection against channel overvoltage	using a Zener (breakdown) diode between the outputs and the + 24 V supply	
Protection against polarity inversions	Using a reverse diode on the supply	
Power of a filament lamp	8 W (max)	8 W (max)

15-pin SUB-D connectors Standard for a TSX CTY 2A / 4A module

General

These connectors are designed to connect the count sensors and the encoder supply:

- TSX CTY 2A modules two 15-pin SUB-D connectors (channels 0 and 1),
- TSX CTY 4A module: four 15-pin SUB-D connectors (channels 0, 1, 2 and 3).

Note: the pinout configuration of the different connectors is exactly the same.

Illustration Pinout configuration of a 15-pin SUB-D connector:

Standard 15-pin SUB-D connector for connecting the counting sensor to channels 0, 1, 2 or 3

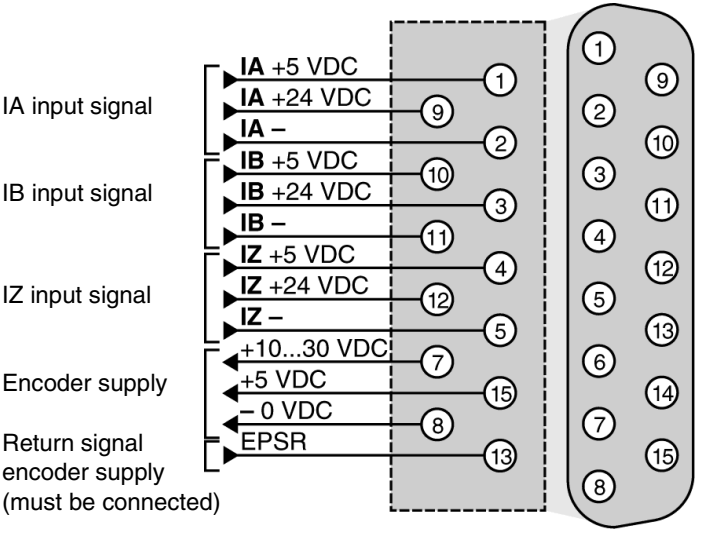

Key:

5 VDC signal	**Pins**
+ IA input	1
- IA input	2
+ IB input	10
- IB input	11
+ IZ input	4
- IZ input	5
Encoder supply:	
+5 VDC	15
-0 VDC	8
Encoder supply feedback	13

Key:

10…30 VDC signals	**Pins**
+ IA input	9
- IA input	2
+ IB input	3
- IB input	11

10…30 VDC signals	**Pins**
+ IZ input	12
- IZ input	5
Encoder supply:	
+10…30 V	7
-0 VDC	8
Encoder supply feedback	13

15-pin SUB-D connectors Standard for a TSX CTY 2C module

General

These connectors are designed to connect the count sensors and the encoder supply:

- TSX CTY 2C module: two 15-pin SUB-D connectors (channels 0 and 1).

Note: the pinout configuration of the different connectors is exactly the same.

Illustration Pinout configuration of a 15-pin SUB-D connector:

Standard 15-pin SUB-D connector for connecting the counting sensor to channels 0, 1, 2 or 3

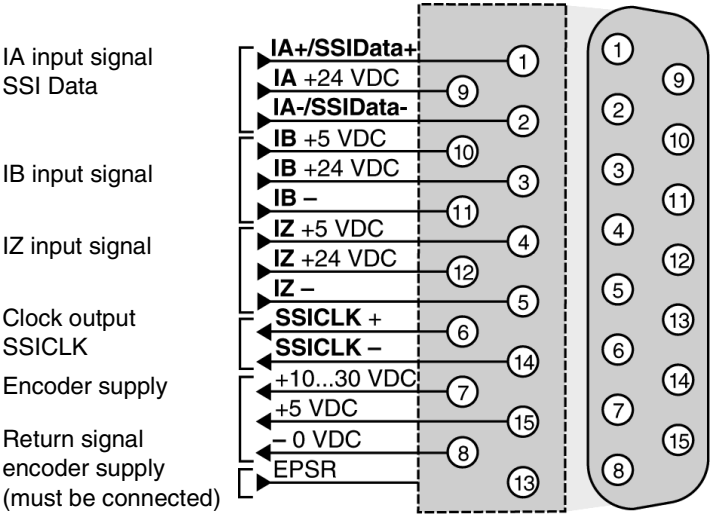

Key:

5 VDC signal	**Pins**
+ IA input	1
- IA input	2
+ IB input	10
- IB input	11
+ IZ input	4
- IZ input	5
Encoder supply:	
+5 VDC	15
-0 VDC	8
Encoder supply feedback	13

Key:

10…30 VDC signals	**Pins**
+ IA input	9
- IA input	2
+ IB input	3
- IB input	11

10…30 VDC signals	**Pins**
+ IZ input	12
- IZ input	5
Encoder supply:	
+10…30 V	7
-0 VDC	8
Encoder supply feedback	13

Key:

Serial signals (absolute encoder with serial or parallel outputs, using a TELEFAST ABE-7CPA11 adapter)	**Pins**
+ SSI Data	1
- SSI Data	2
+ SSI CLK input	6
- SSI CLK input	14
Encoder supply:	
+5 VDC	15
-0 VDC	8
Encoder supply feedback	13

HE10 20-pin connector of a TSX CTY 2A/4A module

General

This connector is used to connect the auxiliary inputs, the outputs, the encoder supplies and the other sensors.
The TSX CTY 2A module comprises only one HE10 connector for channels 0 and 1.
The TSX CTY 4A module includes 2 HE10 connectors for channels 0 and 1 and channels 2 and 3 respectively.

Illustration Wiring diagram for a HE10 20-pin connector:

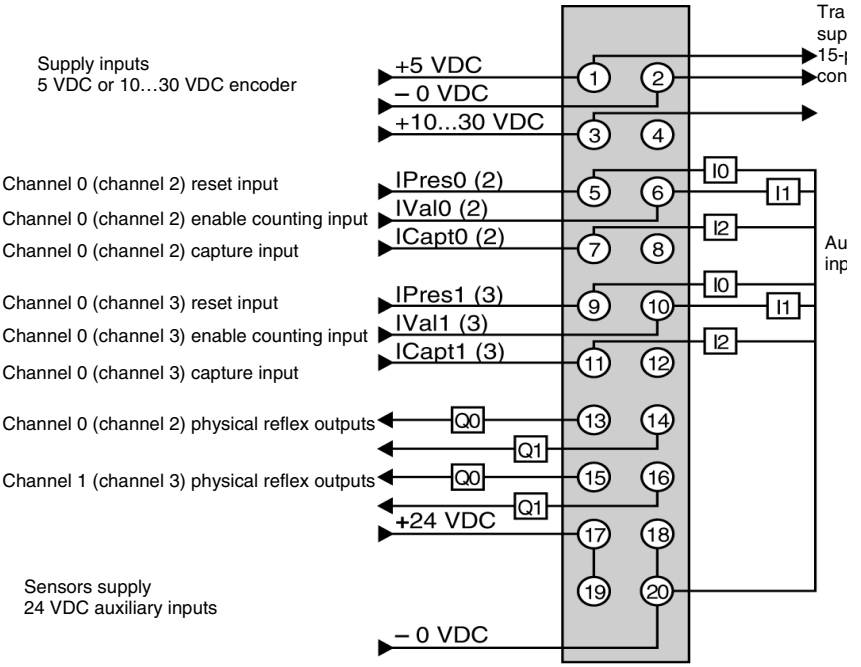

Key:

24 VDC signals	Pins
Channel 0 (channel 2) auxiliary input:	
Preset IPres0/2	5
Confirmation IVal0/2	6
Capture ICapt0/2	7
Channel 1 (channel 3) auxiliary input:	
Preset IPres1/3	9
Confirmation IVal1/3	10
Capture ICapt1/3	11
Channel 0 (channel 2) reflex output:	
Output Q0	13
Output Q1	14
Channel 1 reflex output:	
Output Q0	15
Output Q1	16

Key:

Supplies	**Pins**
Encoder supply:	
+5 VDC	1
- 0 VDC	2
+10...30 VDC	3
Sensor supply:	
+24 VDC	17 or 19
-0 VDC	18 or 20

20-pin HE10 connector of a TSX CTY 2C module

General

This connector is used to connect the auxiliary inputs, the outputs, the encoder supplies and the other sensors.
The TSX CTY 2C module comprises only one HE10 connector for channels 0 and 1.

Illustration Wiring diagram for a 20-pin HE10 connector:

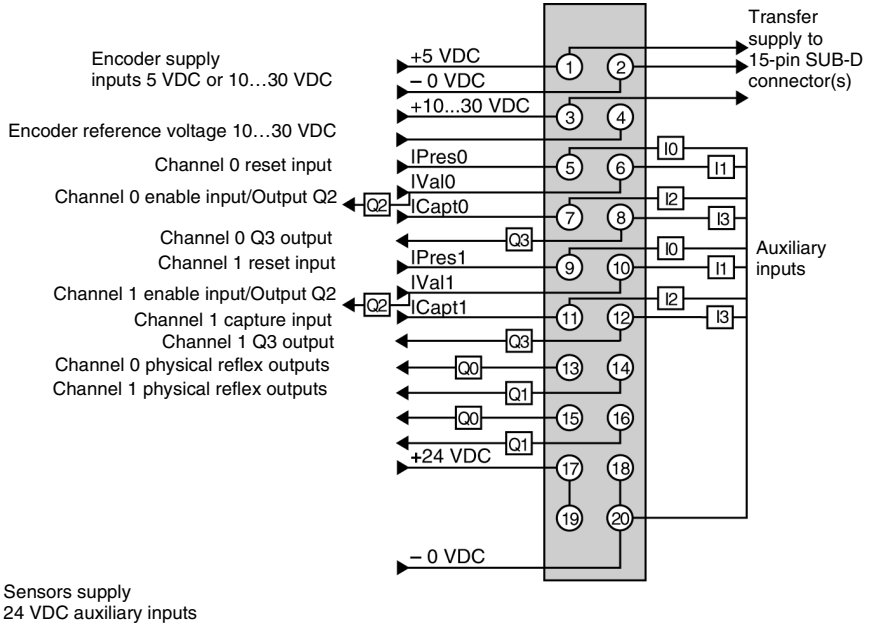

Key:

24 VDC signals	**Pins**
Channel 0 auxiliary input:	
Preset IPres0	5
Confirmation IVal0/Output Q2	6
Capture ICapt0	7
Output Q3	8
Channel 1 auxiliary input:	
Preset IPres1	9
Confirmation IVal1/Output Q2	10
Capture ICapt1	11
Output Q3	12
Channel 0 reflex output:	
Output Q0	13
Output Q1	14
Channel 1 reflex output:	

24 VDC signals	Pins
Output Q0	15
Output Q1	16

Key:

Supplies	Pins
Encoder supply:	
+5 VDC	1
- 0 VDC	2
+10...30 VDC	3
Encoder reference voltage +10…30 VDC	4
Sensor supply:	
+24 VDC	17 or 19
-0 VDC	18 or 20

Principle for connecting counter proximity sensors

Illustration

Process diagram:

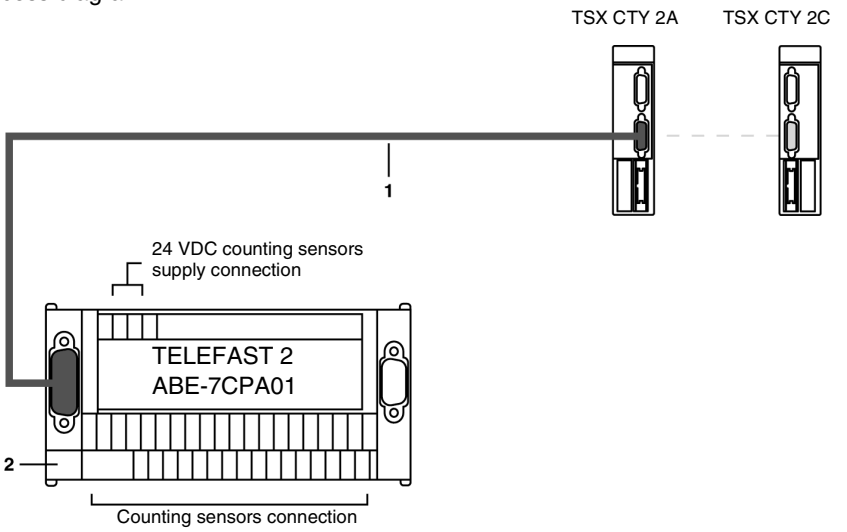

Number table

This table describes the labels on the diagram:

Number	Description
1	TSX CCP S15 cable (2.5m long) or TSX CCPS15050 (0.5m long) or TSX CCP S15100 (1m long), equipped with a high-density 15-pin SUB-D connector and a standard 15-pin SUB-D connector. This cable is used to connect the counting channel to the TELEFAST 2 (ABE-7CPA01) base. It carries the various relevant signals to the counter channel.
2	TELEFAST 2 connection base, reference ABE-7CPA01: Used to connect the count sensors to their supply for the relevant channel.

Note: The connection of channels 2 and 3 of a TSX CTY 4A module is exactly the same as for channels 0 and 1.

Connecting counter sensors and their supply

General

Process diagram:

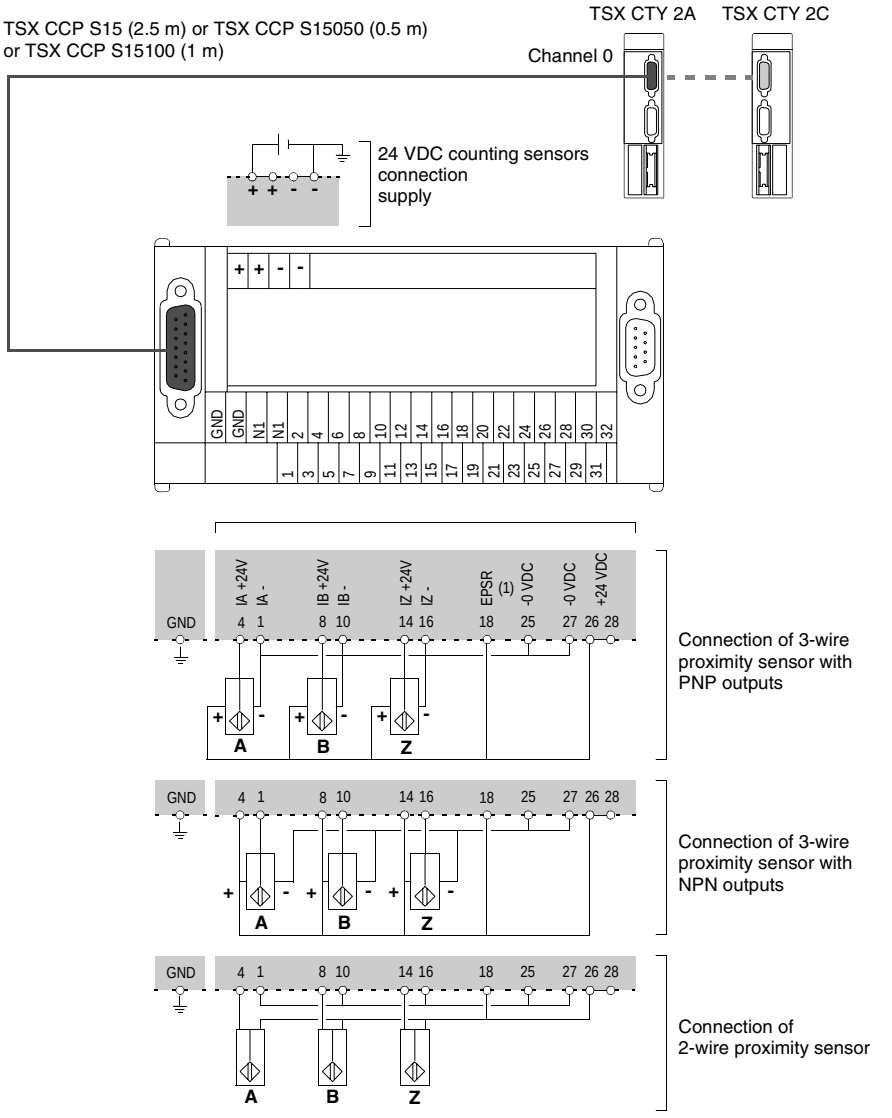

Note: In order to use counter proximity sensors, it is necessary to polarize the EPSR input (encoder return supply). To do this, connect:

- the EPSR (terminal 18) to the + 24 VDC sensor supply (terminal 26 or 28),
- the –0 VDC sensor supply (terminal 27) to the –0 VDC encoder supply (terminal 25).

Wiring precautions

General

The IPres, IVal and ICapt inputs are rapid inputs, which should be connected to the sensor using either a twisted wire, if it is a dry contact, or using shielded cables if it is a 2 or 3-wire proximity sensor.
The module integrates basic protection against short circuits or polarity inversions. **It is necessary** however, to protect the supplies using **fuses in series**. These should be non-delay fuses, with a maximum caliber of 1A.

Important: wiring of Q0 and Q3 static outputs

The actuator connected to the Q0 and Q3 outputs has its shared point at 0 V of the supply. If, due to an incorrect contact, or the accidental disconnection of a wire, the output amplifier is no longer connected to the 0 V supply, the point shared by the actuators remains linked to the 0 V; this could generate a current of a few mA from the amplifier, sufficient to keep the low-power actuators locked.
Illustration:

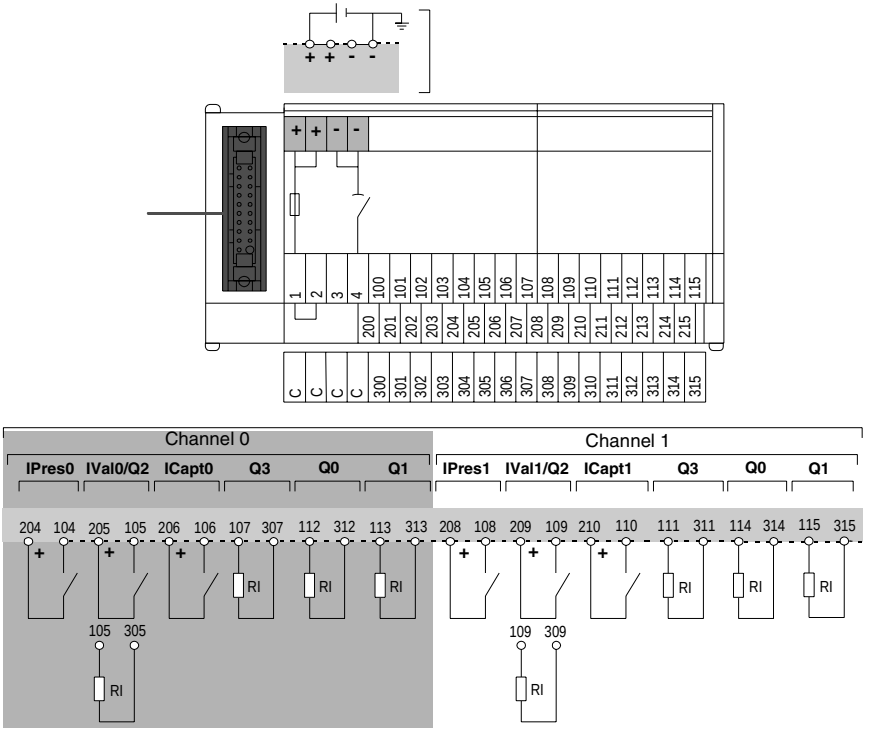

Connection via TELEFAST

This kind of connection provides the most guarantees, on condition that shared actuators are connected to shared pin bar 2•• (jump wire in position 1-2). In this case there can be no outage of the shared module without an outage of the shared actuators.

Process for connecting encoder count sensors

Illustration

The TSX CTY 4A module wiring is as follows. For a TSX CTY 2A or TSX CTY 2C module, only the elements related to channels 0 and 1 should be connected.

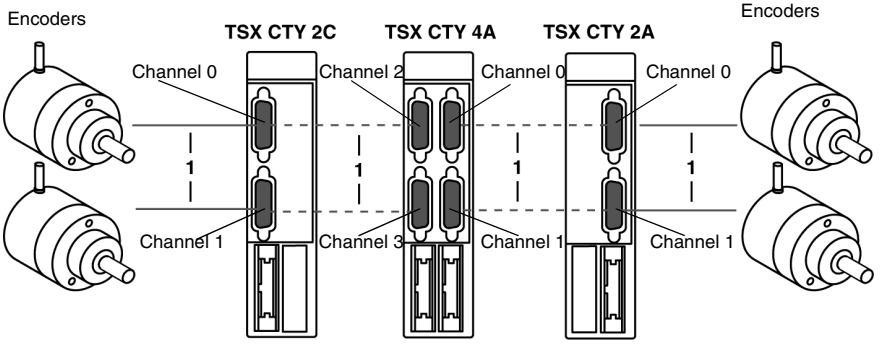

Description of the different connection elements

Process for connecting the encoder to the standard 15-pin SUB-D connector, located on the TSX CTY 2A / 4A / 2C module. Given the various encoder types, it is your responsibility to carry out this connection, which consists of:

- a connector for linking to the encoder (determined by the connector on the encoder in use; normally a female 12-pin DIN connector),
- a standard male 15-pin SUB-D connector, to connect to the female 15-pin SUB-D connector on the TSX CTY 2A/4A/2C module. This connector is available under reference TSX CAP S15,
- a cable:
  - with twisted pairs (gauge 26) and shielding for an incremental encoder with standard RS 422 line transmitter outputs or an absolute encoder,
  - multi-conductor (gauge 24) with shielding for an incremental encoder with Totem Pole outputs.

The type of cable shielding should be "braid and foil". The cables should be completely supported to ensure the "braid and foil" is connected to the ground connection of each connector.
Connection of the cable to the two connectors can vary according to the type of encoder supply (5 VDC or 10…30 VDC) and the type of outputs (RS 422, Totem Pole). By way of an example, certain types of connection are described in the following pages.

Connecting an encoder to a TSX CTY 2A / 4A / 2C module

Illustration

Process diagram:

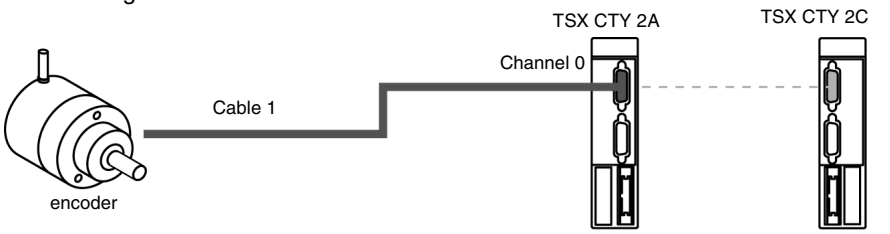

Example for connecting an incremental encoder with RS 422 / RS 485 line transmitter outputs

Encoder characteristics

- supply voltage: 5 VDC,
- output voltage: 5 VDC differential,
- high-level output: line transmitter, RS 422 / RS 485 standard.

Process diagram:

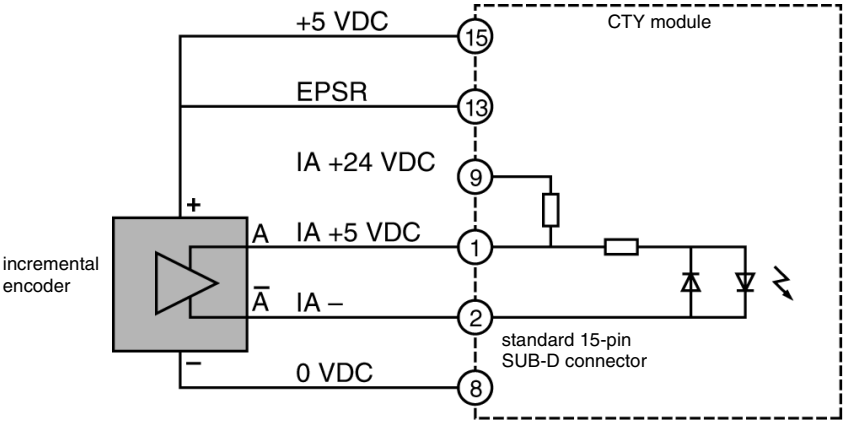

Channel connection diagram:

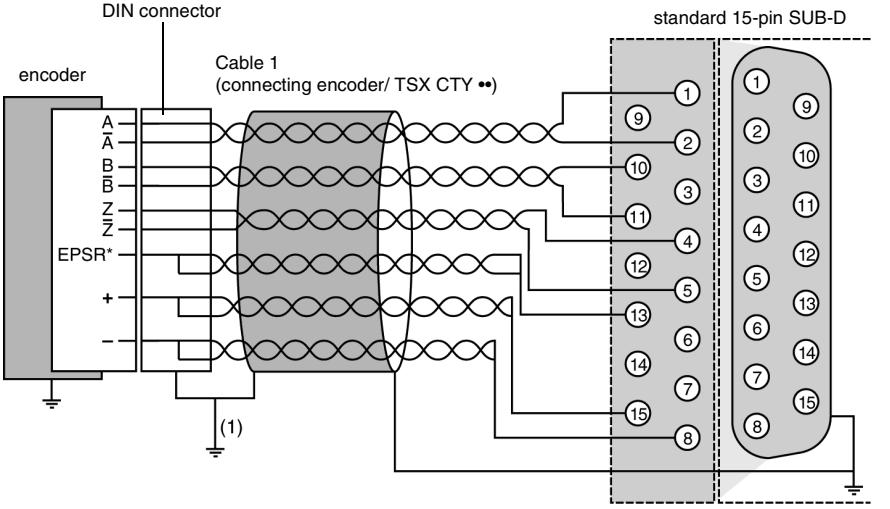

*EPSR: supply feedback of the encoder,
(1) link directly if the encoder is grounded.

Example of connecting an incremental encoder with Totem Pole outputs

Encoder characteristics

- supply voltage: 10...30 VDC,
- output voltage: 10…0 VDC,
- high-level outputs: Totem Pole.

Process diagram

This diagram shows the principles for connection:

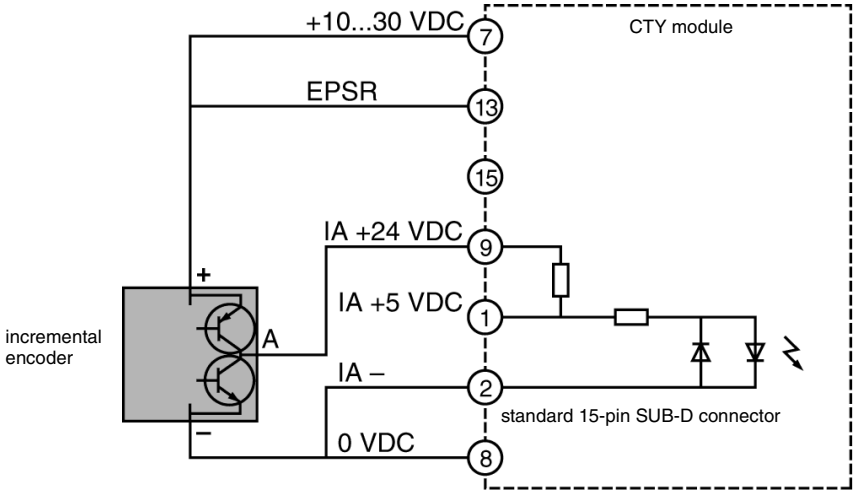

Channel connection diagram

This diagram shows the principles for connecting a channel:

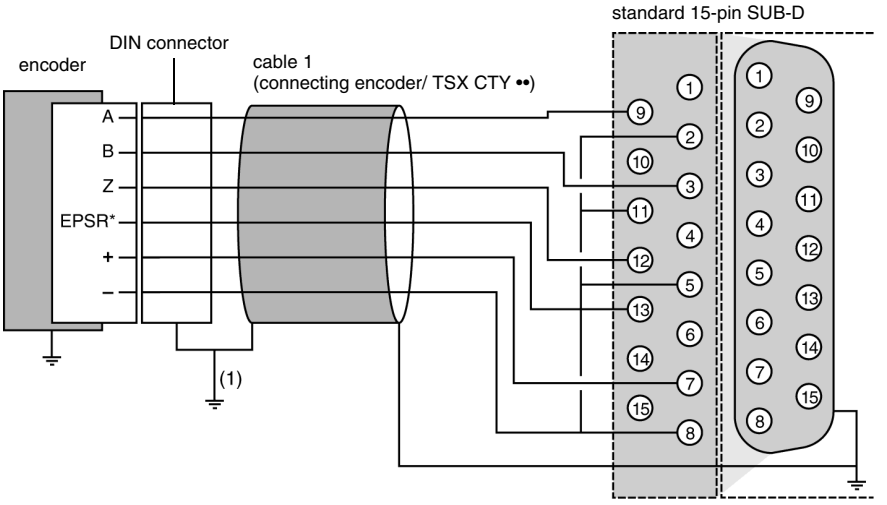

*EPSR: supply feedback of the encoder.
If the encoder has no supply feedback, link the EPSR input on the encoder side to the + of the supply.
(1) link directly if the encoder is grounded.

Example of connecting an incremental encoder with NPN open collector outputs.

Encoder characteristics

- supply voltage: 24 VDC,
- output voltage: 24 VDC,
- high-level outputs: NPN open collector.

Process diagram

This diagram shows the principles for connection:

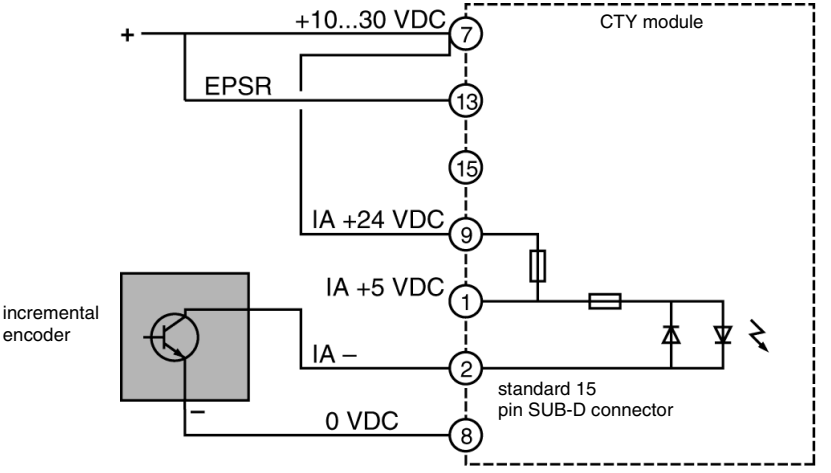

Channel connection diagram

This diagram shows the principles for connecting a channel:

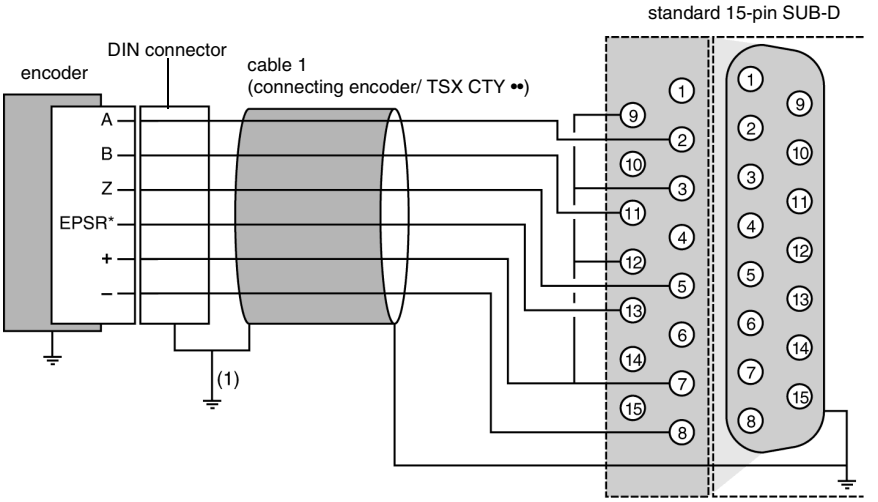

*EPSR: supply feedback of the encoder.
If the encoder has no supply feedback, link the EPSR input on the encoder side to the + of the supply.
(1) link directly if the encoder is grounded.

Example of connecting an incremental encoder with PNP open collector outputs

Encoder characteristics

- supply voltage: 24 VDC,
- output voltage: 24 VDC,
- high-level outputs: PNP open collector.

Process diagram

This diagram shows the principles for connection:

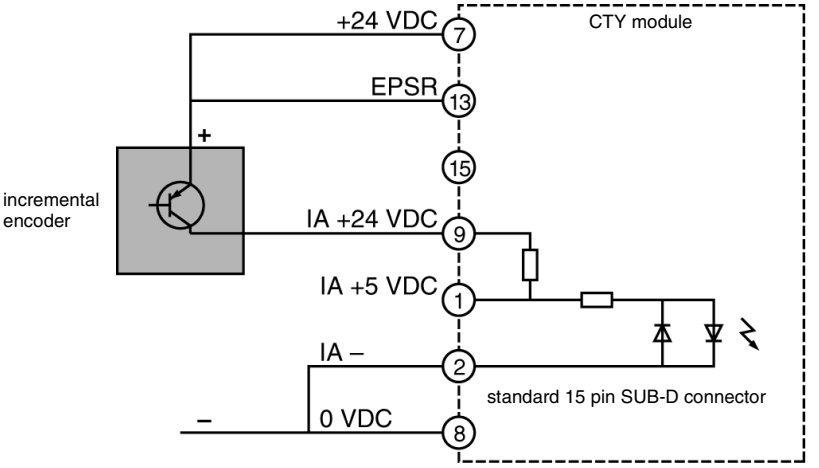

Channel connection diagram

This diagram shows the principles for connecting a channel:

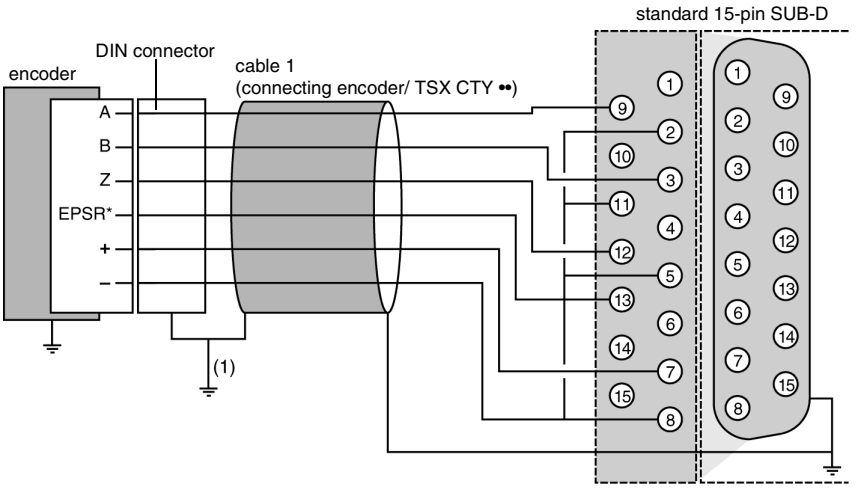

*EPSR: supply feedback of the encoder.
If the encoder has no supply feedback, link the EPSR input on the encoder side to the + of the supply.
(1) link directly if the encoder is grounded.

Example of connecting an absolute encoder with a serial output or parallel outputs, via ABE-7CPA11 adapted TELEFAST (only TSX CTY 2C module)

Encoder characteristics

- supply voltage: 5 VDC or 10...30 VDC,
- high-level outputs: differential line transmitter.

Process diagram

This diagram shows the principles for connection:

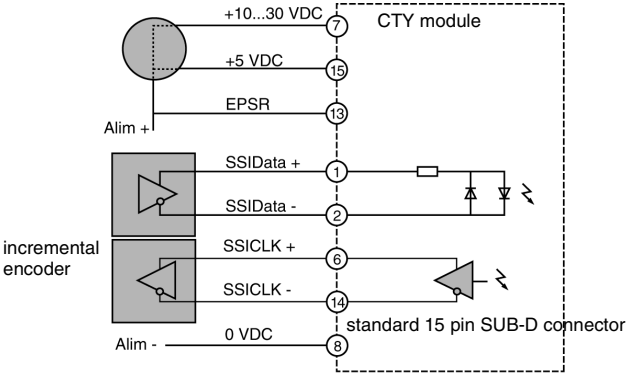

Channel connection diagram

This diagram shows the principles for connecting a channel:

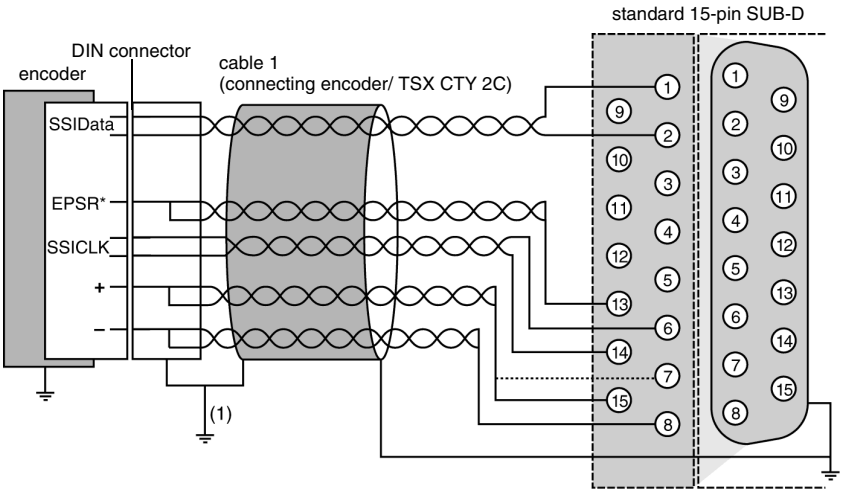

*EPSR: supply feedback of the encoder.
If the encoder has no supply feedback, link the EPSR input on the encoder side to the + of the supply.
(1) link directly if the encoder is grounded.

Principle for connecting sensors onto auxiliary I/O

Connection principle

The TSX CTY 4A wiring is as follows. For a TSX CTY 2A or TSX CTY 2C module, only one TELEFAST is connected (channels 0 and 1).

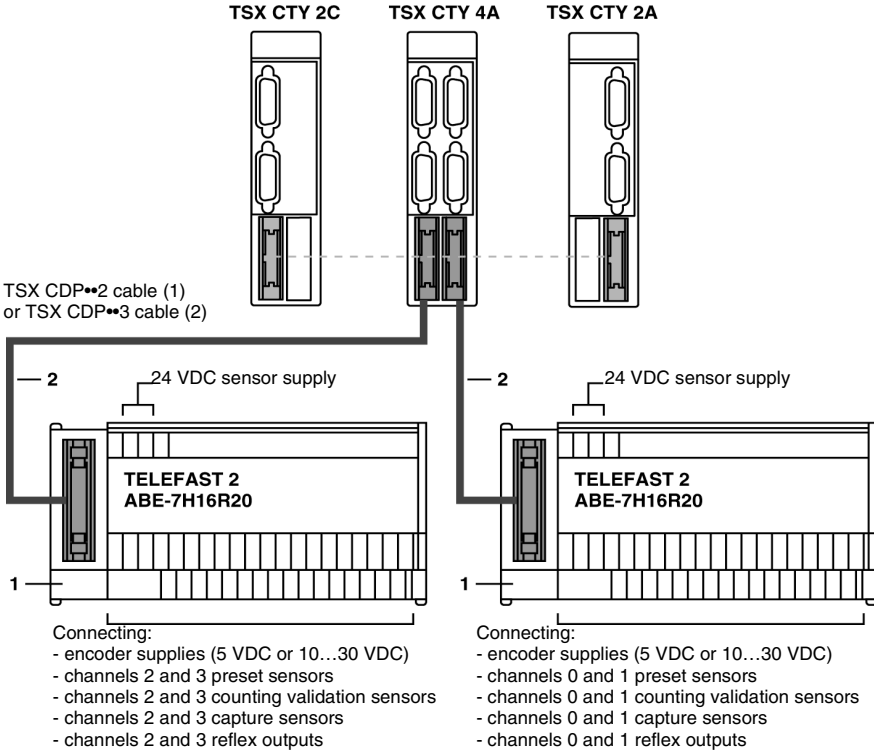

Note: Using a discrete TELEFAST connection base is not compulsory, but advisable as it facilitates the connection of supplies, sensors and pre-actuators on to the auxiliary I/O.

(1) TSX DCP 102: 1 m in length,
TSX CDP 202: 2 m in length,
TSX CDP 302: 3 m in length,

(2) TSX CDP 053: 0.5 m in length,
TSX CDP 103: 1 m in length,
TSX CDP 203: 2 m in length,
TSX CDP 303: 3 m in length,
TSX CDP 503: 5 m in length.

Description of the different connection elements

This table shows the different connection elements according to address:

Number	Description
1	TELEFAST 2 connection base: ABE-7H16R20. This allows rapid connection of: ● the 24 VDC supply for the sensors connected to the auxiliary I/O, ● the encoder supply (if the counting sensor is of the encoder type), ● the sensors onto the auxiliary I/O (preset, confirmation, capture), ● the pre-actuators.
2	Stranded and clad TSX CDP •• 2 cable or connection cable TSX CDP ••3.

Note: The ABE-7BV20 accessory (sold in inseparable quantities of 5) facilitates shared connection.

Connecting sensors and their supply

Process diagram This connection is made using a TELEFAST 2 connection base with the reference no. ABE-7H16R20:

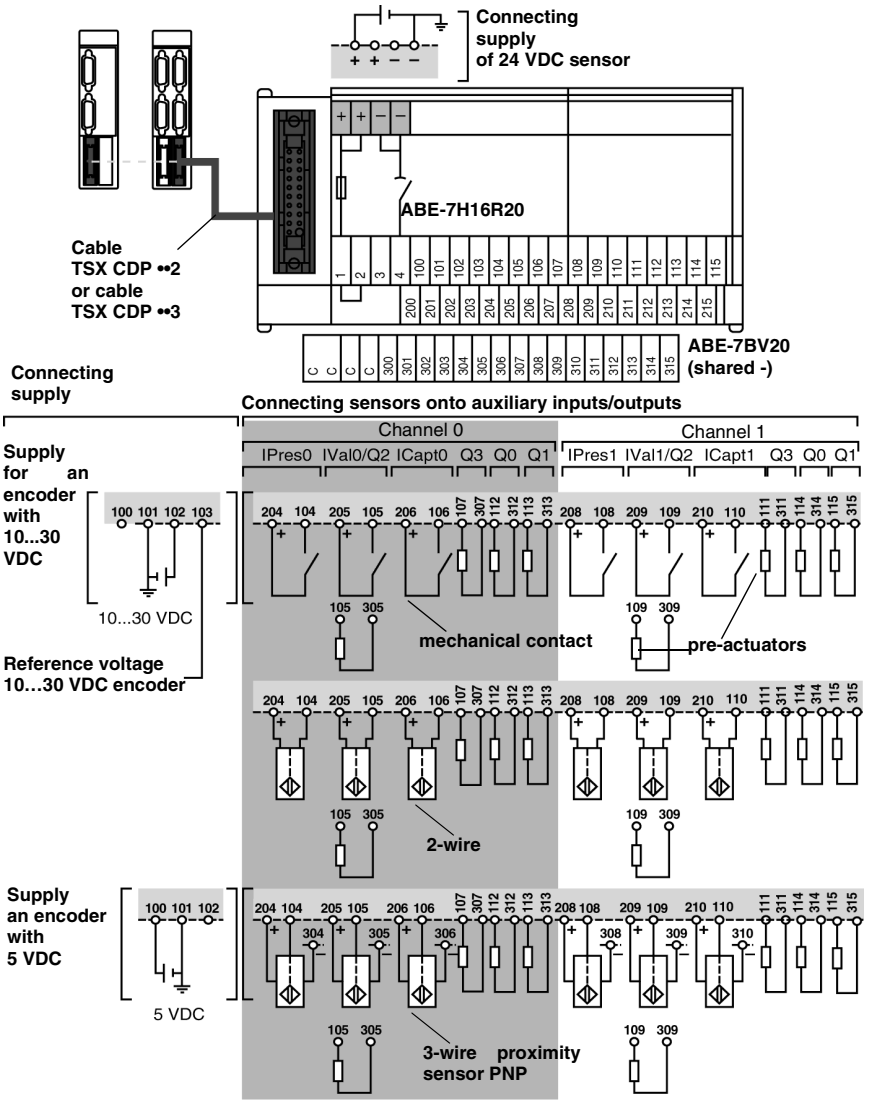

Note: The connection of channels 2 and 3 of a TSX CTY 4A module is exactly the same as for channels 0 and 1.

General rules for implementation

Installation

Connecting or disconnecting the standard 15 pin SUB-D connectors of the TSX CTY 2A/ 4A/ 2C modules to/from the encoder and sensor supplies present is not recommended as this may damage the encoder. Some encoders cannot withstand sudden and simultaneous signal and supply power-ups or outages.

General wiring instructions

Wire sections

Use wires of a satisfactory section to avoid drops in voltage (mainly with 5 V) and overheating.

Example of falls in voltage for encoders supplied with 5 V with a cable length of 100 meters:

Section of the wire	Encoder consumption			
	50 mA	**100 mA**	**150 mA**	**200 mA**
0.08 mm^2 (gauge 28)	1.1 V	2.2 V	3.3 V	4.4 V
0.12 mm^2 (gauge 26)	-	1.4 V	-	-
0.22 mm^2 (gauge 24)	-	0.8 V	-	-
0.34 mm^2 (gauge 22)	0.25 V	0.5 V	0.75 V	1 V
0.5 mm^2	0.17 V	0.34 V	0.51 V	0.68 V
1 mm^2	0.09 V	0.17 V	0.24 V	0.34 V

Connection cable

All cables carrying the sensor supply (encoders, proximity sensor etc.) and the counting signals must:

- be at a distance from high voltage cables,
- be shielded with the shielding , which is linked to the protective ground connection on both the PLC and encoder side,
- never carry signals other than counting signals and supplies relating to counting sensors.

The connection cable between the module and encoder should be as short as possible to avoid creating loops, as the circuit capacities can interfere with operation.

Note: If necessary, direct the flow of the signal in the same cable as the supplies. Cables with twisted pairs should preferably be used for this.

Encoder and auxiliary sensor supply

Encoder supply

This must:

- be reserved exclusively for supplying the encoder to avoid parasitic pulses which could interfere with the encoders, whose electronics are sensitive,
- be placed as close to the TELEFAST 2 base as possible to reduce drops in voltage and coupling with other cables,
- be protected against short circuits and overloads by fast blow fuses,
- work well independently to avoid micro-power outages.

Auxiliary sensor supply

Refer to the general regulations for implementing discrete modules.

Note: The – 0 VDC polarity of the auxiliary encoder and sensor supplies should be grounded as near to the supplies as possible.
The shielding of the cables carrying the voltages should be grounded.

Software implementation

Software implementation and the language objects assigned to the different counting functions are described in the "counting application" manual.

Appendices

4

At a Glance

Subject of this chapter

This Chapter deals with TELEFAST 2: ABE-7CPA01, TELEFAST 2: ABE-7H16R20, etc.

What's in this Chapter?

This chapter contains the following topics:

Topic	Page
Connecting TELEFAST 2: ABE-7CPA01	99
Availability of counting signals on the TELEFAST screw terminal block	101
Correspondence between TELEFAST ABE-7CPA01 terminal block and 15 pin SUB-D connector	102
TELEFAST 2 connection base: ABE-7H16R20	103
Availability of signals on TELEFAST screw terminal block	104
Correspondence between TELEFAST ABE-7H16R20 terminals and HE10 connector	105
TELEFAST 2 connection and adaptation base: ABE-7CPA11	106
Physical description of the TELEFAST 2: ABE-7CPA11	107
Characteristics of the TELEFAST base ABE-7CPA11	108
Connecting the TELEFAST 2 base: ABE-7CPA11	111
Connecting encoders with 10…30 V supply	113
Connecting encoders with 5 V supply	115
Example of the multiplexing of encoders with a 5 V supply.	117
Example of connection: each TSX CTY 2C channel is only connected to one TELEFAST	119
Example of connection: 2 TELEFAST are connected on the same channel	121
Example of connection: 3 TELEFAST are connected on the same channel	122
Example of connection: 4 TELEFAST are connected on the same channel	124

Topic	Page
Rules and precautions for wiring	126
Configuration of the TELEFAST base	129
Overview of the TSX TAP S15•• wiring accessories	134
Mounting and measurements of the TSX TAP S15 05/24	135
Connecting an encoder with a TSX TAP S15 05 accessory.	137
Connecting an encoder with a TSX TAP S15 24 accessory	138
Pre-wired strands and cable	139
Module display	141

Connecting TELEFAST 2: ABE-7CPA01

At a Glance

Using a TELEFAST 2 (ABE-7CPA01) connection base, a standard 15 pin female SUB-D connection can be transformed into a screw terminal block connection with:

- 32 terminals on two rows, where the different sensors and their supplies can be connected,
- 4 terminals for restart (2 GND terminals + 2 N1 terminals for specific restarts),
- 4 terminals for connecting the sensor supply.

This means proximity detector type sensors can be quickly connected onto a counting channel of the TSX CTY 2A, TSX CTY 4A and TSX CTY 2 modules. Illustration:

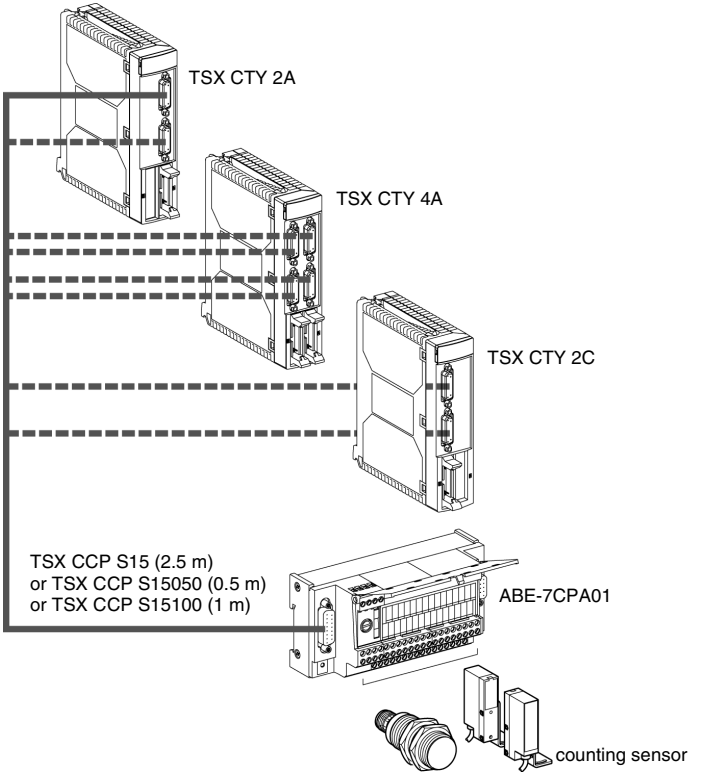

The 9 pin SUB-D connector means information can be reported to an Altivar when this base is used with analog inputs/outputs.

Wiring layout

Illustration:

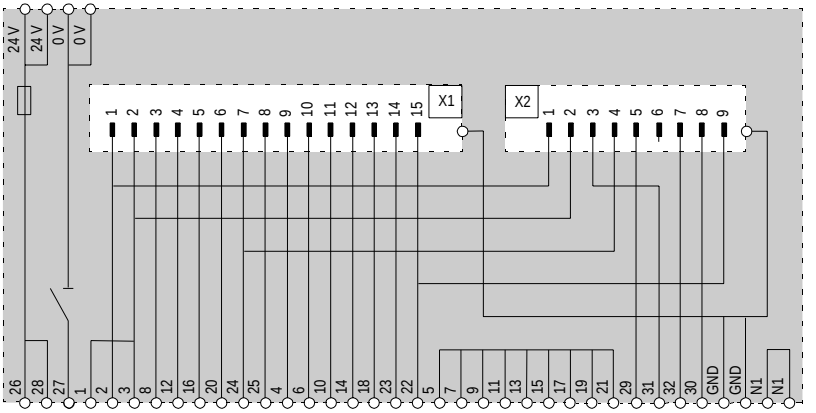

Dimensions and mounting

Dimensions

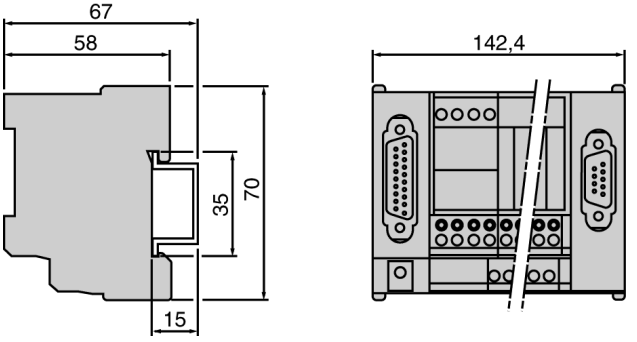

Mounting

The ABE-7CPA01 connection base is mounted on a DIN mounting rail, which has a width of 35 mm.

Availability of counting signals on the TELEFAST screw terminal block

Counting channel used with proximity detector type sensors

Illustration:

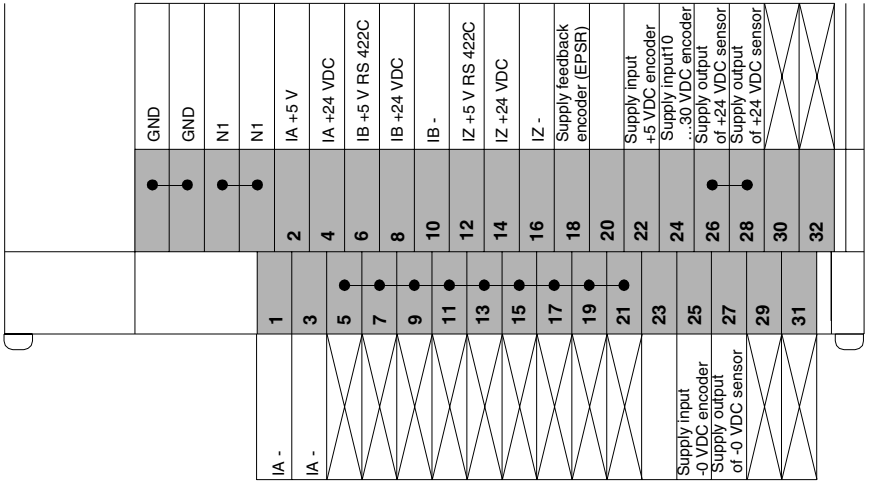

Note: Each TELEFAST 2 ABE-7CPA01 connection base comes with 6 labels so that each base can be individually identified according to the function.
An optional ABE-7BV20 bar can be added, for example for a shared GND.

Correspondence between TELEFAST ABE-7CPA01 terminal block and 15 pin SUB-D connector

General

This table shows the correspondences between TELEFAST ABE-7CPA01 terminal blocks and the 15 pin SUB-D connector:

TELEFAST screw terminal block (Terminal No.)	Standard 15 pin SUB D connector (Pin No.)	Signal type	
		TSX CTY 2A / 4A	TSX CTY 2C
1	2	IA-	IA-
2	1	IA + 5 V RS 422C	IA + 5 V RS 422C
3	2	IA-	IA-
4	9	IA + 24 VDC	IA + 24 VDC
5			
6	10	IB + 5 V RS 422 C	IB + 5 V RS 422 C
7			
8	3	IB + 24 VDC	IB + 24 VDC
9			
10	11	IB-	IB-
11			
12	4	IZ + 5 V RS 422 C	IZ + 5 V RS 422 C
13			
14	12	IZ + 24 VDC	IZ + 24 VDC
15			
16	5	IZ-	IZ-
17			
18	13	Encoder supply return (EPSR)	
19			
20	6		Reserved
21			
22	15	Encoder supply input + 5 VDC	
23	14		Reserved
24	7	Encoder supply input +10…30 VDC	
25	8	Encoder supply input -0 VDC	
26		Sensor supply output + 24 VDC	
27		Sensor supply output -0 VDC	
28		Sensor supply output + 24 VDC	
29			
30			
31			
32			

TELEFAST 2 connection base: ABE-7H16R20

At a Glance

With a TELEFAST 2 (ABE-7H16R20) connection base, a 20 pin HE10 type connection can be transformed into a screw terminal block connection, so that sensors and supplies can be quickly connected to the auxiliary inputs of the TSX CTY 2A / 4A / 2C counting modules.

Illustration

This diagram shows the connection of a TELEFAST to the counting modules:

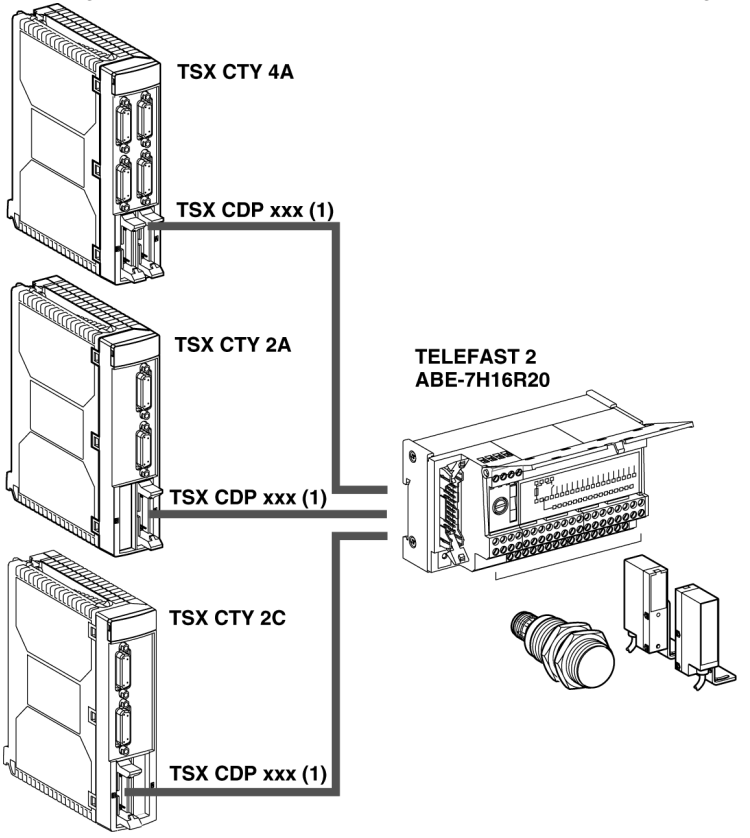

(1) TSX CDP ••2 or TSX CDP ••3 cable.

Note: The TELEFAST 2 connection bases for discrete I/O are described in the discrete I/O implementation manual.

Availability of signals on TELEFAST screw terminal block

Illustration

The terminal block below represents the terminal block of the ABE-7H16R20 base.

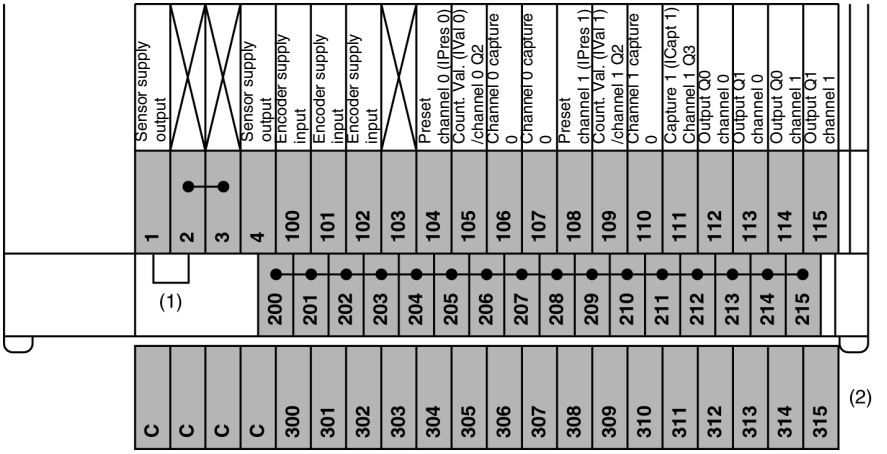

(1) On the ABE-7H16R20 base, the position of the jumper wire determines the polarity of all the 2•• terminals:

- jumper wire in position 1 or 2: terminals 200 to 215 have + polarity,
- jumper wire in position 3 or 4: terminals 200 to 215 have - polarity.

(2) On the ABE-7H16R20 base, it is possible to add an optional ABE-7BV20 bar to create a second shared sensor (+ or - according to user's choice).

Note: Sensor connection and supply on the ABE-7H16R20 base are described in the discrete I/O implementation manual.

Correspondence between TELEFAST ABE-7H16R20 terminals and HE10 connector

General This table introduces the correspondence between TELEFAST ABE-7H16R20 terminal blocks and the HE10 connector:

TELEFAST screw terminal block (Terminal No.)	20 pin HE10 connector (Pin No.)	Kind of signal		
		TSX CTY 2A / 4A	TSX CTY 2C	Type of signal
100	1	+ 5 VDC	+ 5 VDC	Encoder supply
101	2	- 0 VDC	- 0 VDC	
102	3	+ 10...30 VDC	+ 10...30 VDC	
103	4		Encoder reference voltage 10…30 VDC	
104	5	IPres 0/2	IPres 0	Auxiliary inputs channels 0 / 2
105	6	IVal 0/2	IVal 0 / Q2 output channel 0	
106	7	ICapt 0/2	ICapt 0	
107	8		Q3 output channel 0	
108	9	IPres 1/3	IPres 1	Auxiliary inputs / outputs channels 1 / 3
109	10	IVal 1/3	IVal 1 / Q2 output channel 1	
110	11	ICapt 1/3	ICapt 1	
111	12		Q3 output channel 1	
112	13	Q0 output channel 0/2	Q0 output channel 0	Reflex outputs channels 0 / 2
113	14	Q1 output channel 0/2	Q1 output channel 0	
114	15	Q0 output channel 1/3	Q0 output channel 1	Reflex outputs channels 1 / 3
115	16	Q1 output channel 1/3	Q1 output channel 1	
+ 24 VDC	17	Auxiliary input/output supply		
- 0 VDC	18			
+ 24 VDC	19			
- 0 VDC	20			
1		Terminals 200 to 215 at +24 VDC		
2				
3		Terminals 200 to 215 at -0 VDC		
4				
200...215		Connecting shared sensors to: + 24 VDC if terminals 1 and 2 are connected - 0 VDC if terminals 3 and 4 are connected		
300...315		On the ABE-7BV20 optional bar, terminals can be used as sensors		

TELEFAST 2 connection and adaptation base: ABE-7CPA11

At a Glance

The TELEFAST 2 connection and adaptation base: ABE-7CPA11 is used to connect absolute encoders with parallel outputs to the TSX CTY 2C counting module.
It converts the position value provided by the absolute encoder with parallel outputs into serial information. The absolute encoder must be encoded in pure binary or Gray with a maximum of 24 bits of data.
2 absolute encoders with parallel outputs can be connected on the same adaptation TELEFAST. Further, serializing several ABE-7CPA11 bases (4 maximum) means up to 4 absolute encoders with parallel outputs can be multiplexed on one counting channel (position acquisition).

Illustration

This diagram shows an absolute encoder with a TELEFAST ABE-7CPA11 and a TSX CTY 2C module:

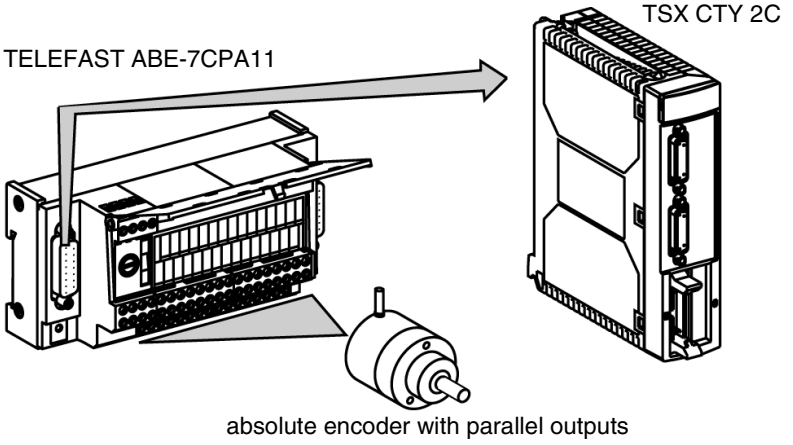

Physical description of the TELEFAST 2: ABE-7CPA11

Illustration

This diagram shows a TELEFAST 2: ABE-7CAP11:

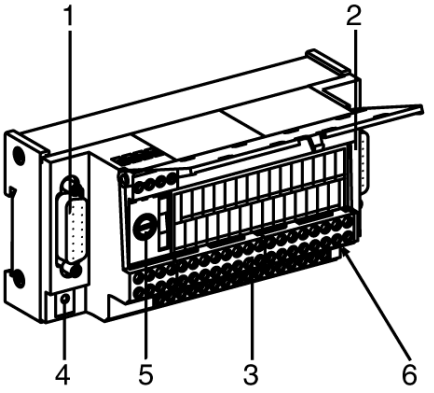

Table of numbers

This table describes the diagram below using numbers:

Number	Description
1	Standard 15 pin SUB-D connector for connecting the TELEFAST to the TSX CTY 2C module.
2	Standard 15 pin SUB-D connector for putting several TELEFASTS (maximum 4) in series.
3	Screw terminal block for connecting one or more absolute encoders with parallel outputs (maximum 2). The supplies can be shared out by using additional snap on terminal blocks: ABE-7BV10 (10 terminals) or ABE-7BV20 (20 terminals).
4	TELEFAST diagnostics LED. This green LED is illuminated when the TELEFAST is powered.
5	Protection fuse for the 10…30 V supply (rapid 1A type).
6	Microswitch for configuring one or more encoders (encoder number, type, etc.).

Characteristics of the TELEFAST base ABE-7CPA11

General characteristics

This is a table of the general characteristics:

Parameters	Values
Permitted voltage at 10…30 VDC	11…30 V
Permitted voltage at 5 VDC	5…6V
Maximum frequency for change in state of the least significant bit	75 kHz
Read frequency of the serial frame	150 kHz...1 MHz
Current used (excluding encoder)	typical: 90 mA Max: 130 mA
Dissipated power	typical: 450 mW Max: 1.5 W
Encoder supply return monitoring: ● on the + supply ● on the - supply	-15% Vsuppl +15% Vsuppl
Insulation resistance	> 10 MΩ under 500 VDC
Dielectric rigidity	1000 Veff.50/60 Hz in 1 min
Operating temperature	0…60°C
Hygrometry	5%…95% without condensation
Storage temperature	-25 °C…+70°C
Operating altitude	0...2000 m

Characteristics of the encoder read inputs (in0 to in23)

This table shows the characteristics of the read inputs (in0 to in23):

Parameters	Values
Logic	positive or negative (1)
Compatibility with encoder outputs	11-30 V Totem pole outputs 5 V TTL outputs 11-30 V NPN open collector transistor outputs
Max. voltage permissible on the inputs	+30 V
Max. wiring length between encoder and TELEFAST	200 m (2)
VIL input voltage	0 V < VIL < 2.5 V
VIH input voltage	3.9 V > VIL > 30 V

(1) **Positive logic**: voltage < 2.5 V -> state 0,
voltage > 3.9 V -> state 1,
Negative logic: voltage < 2.5 V -> state 1,
voltage > 3.9 V -> state 0.

(2) 50m max with pure binary encoded encoders with NPN open collector outputs and derating according to length.

Characteristics of the discrete address inputs (AD0, AD1)

This table shows the characteristics of the discrete address inputs (AD0, AD1):

Parameters	Values
Logic	positive
Voltage limit • max. voltage limit permissible	30 V 34 V (1hr in 24)
Nominal values • with voltage • in current	24 V 7 mA
Voltage for ON state Current for ON state at 11 V Voltage for OFF state Current for OFF state	≥11 V ≥3mA ≤ 5 V ≤ 2 mA
Input impedance for nominal U	3.6 kΩ
Response time	25 µs...50 µs
Type of inputs	resistive
IEC 1131 conformity	type 1

Characteristics of the command outputs with 3 encoder states (3OT0, 3OT1)

This table shows the characteristics of the command outputs with 3 encoder states (3OT0, 3ST1):

Parameters	Values
Output voltage	encoder supply
Nominal current	enc. supply / 3 kΩ
Max fall in voltage	< 0.5 V
Max. current	10 mA
Protection against overloads and short-circuits	no

Connecting the TELEFAST 2 base: ABE-7CPA11

15 pin SUB-D connector pinouts

Illustration:

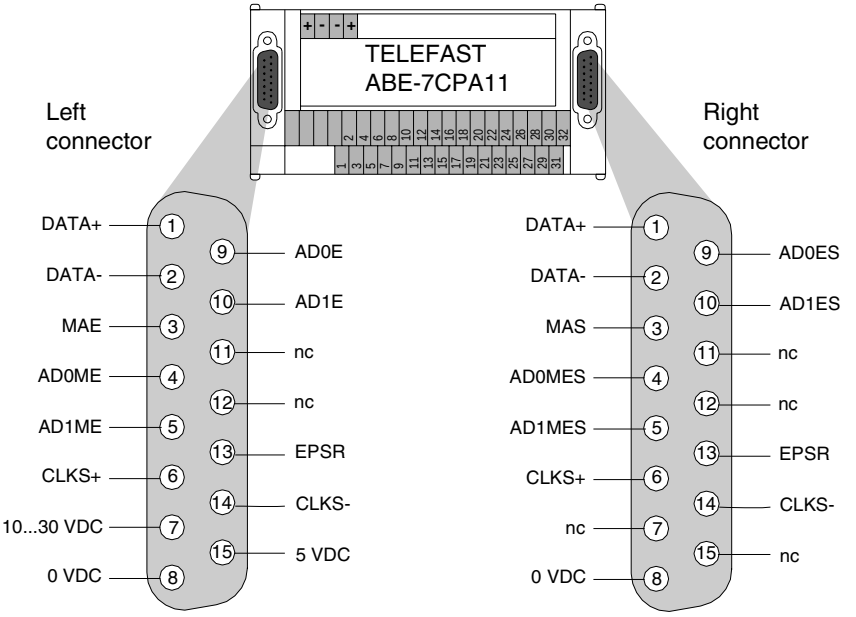

Key:

Supply	
0 VDC	8
10...30 VDC	7
0 VDC	15
Addressing the encoders	
• inter-TELEFAST bus (Input):	
AD0E	9
AD1I	10
AD0MI	4
AD1MI	5
MAI	3
Encoder supply return EPSR	13

Serial link	
● data outputs:	
DATA+	1
DATA-	2
● clock inputs:	
CLKS+	6
CLKS-	14

Key:

Supply	
0 VDC	8
Addressing the encoders	
● inter-TELEFAST bus (Output):	
AD0IO	9
AD1IO	10
AD0MIO	4
AD1MIO	5
MAO	3
Encoder supply return EPSR	13
Serial link	
● data outputs:	
DATA+	1
DATA-	2
● clock inputs:	
CLKS+	6
CLKS-	14

Connecting encoders with 10…30 V supply

Process diagram Illustration:

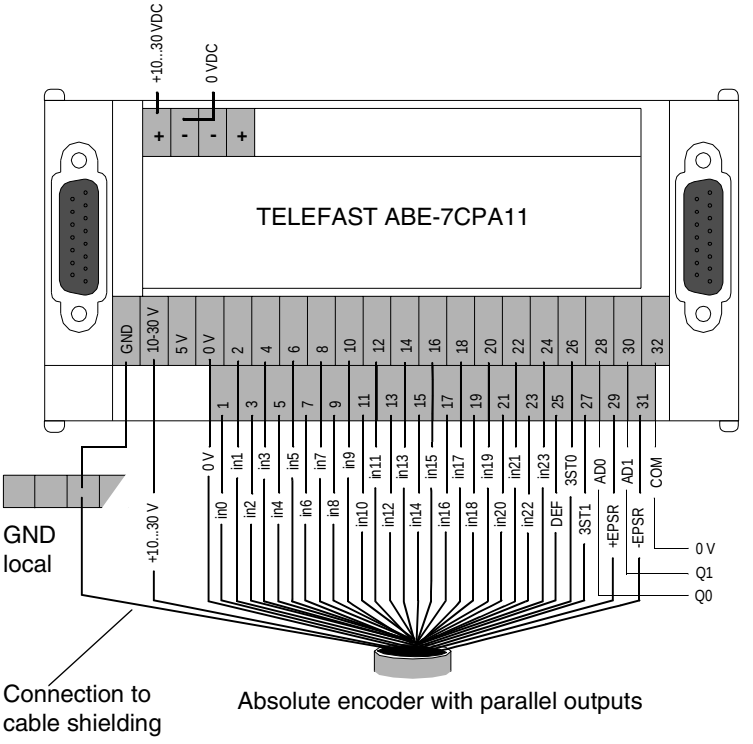

Key:

Signals	Meaning	Terminal No.
GND	ground connection of the encoder(s)	
+10…30 V	+ supply terminal of the encoder(s)	
0 V	- supply terminal of the encoder(s)	
in0 to in23	outputs of the encoder(s)	1...24
ERR	error output of the encoder(s)	25
3OT0	command to inhibit the 0 encoder outputs (for multiplexing)	26
3OT1	command to inhibit the 1 encoder outputs (for multiplexing)	27
AD0, AD1	encoder multiplexing command	28,30
COM	shared AD0 and AD1 signals	32
+ EPSR	encoder supply return input + (connector at 10…V if no monitoring)	29
- EPSR	encoder supply return input + (connector at 0 V without monitoring)	31

Note:
refer to wiring rules and precautions (See *Rules and precautions for wiring, p. 126*) for encoder outputs.

Connecting encoders with 5 V supply

Process diagram Illustration:

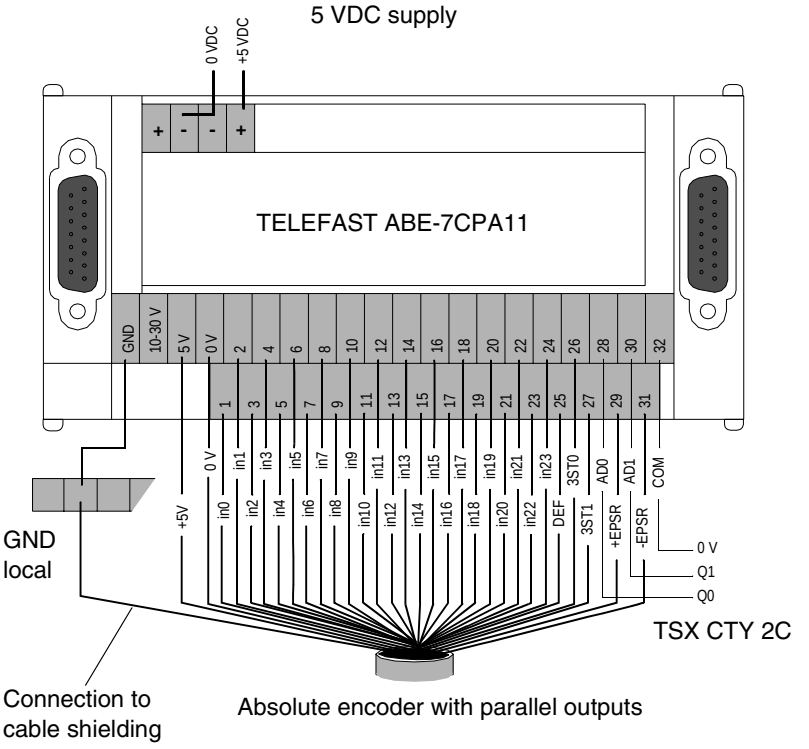

Key:

Signals	Meaning	Terminal No.
GND	ground connection of the encoder(s)	
+5 V	+ supply terminal of the encoder(s)	
0 V	- supply terminal of the encoder(s)	
in0 to in23	outputs of the encoder(s)	1...24
ERR	error output of the encoder(s)	25
3OT0	command to inhibit the 0 encoder outputs (for multiplexing)	26
3OT1	command to inhibit the 1 encoder outputs (for multiplexing)	27
AD0, AD1	encoder multiplexing command	28,30
COM	shared AD0 and AD1 signals	32
+ EPSR	encoder supply return input + (connect to +5 V if no monitoring)	29
- EPSR	encoder supply return input + (connector at 0 V if no monitoring)	31

Note:
refer to wiring rules and precautions (See *Rules and precautions for wiring, p. 126*) for encoder outputs.

Example of the multiplexing of encoders with a 5 V supply.

General

Illustration:

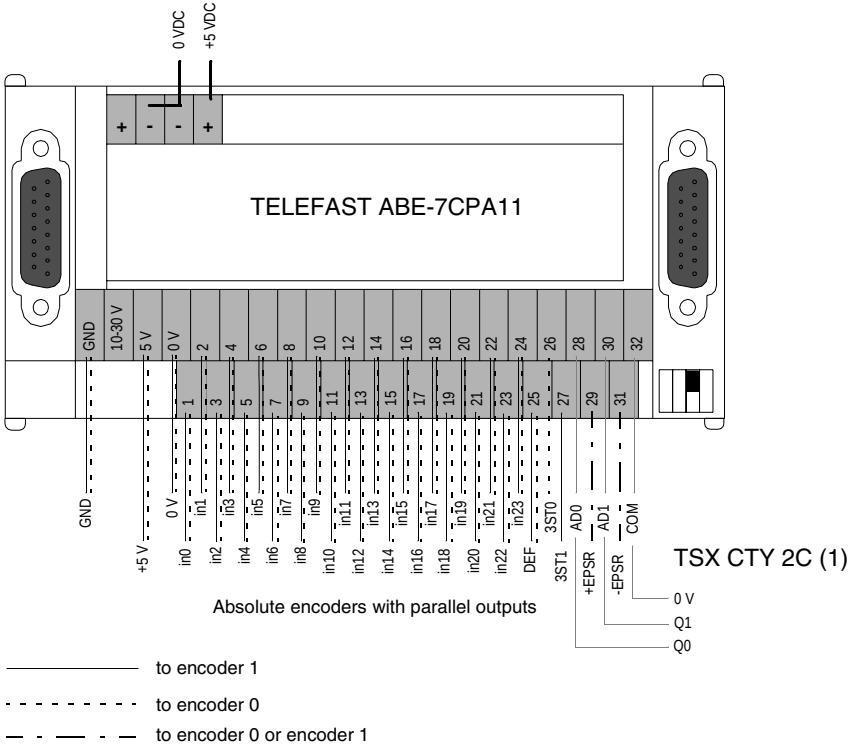

IMPORTANT
When carrying out multiplexing, encoders with parallel outputs of the same type must be used:

- with the same number of data bits,
- and the same supply (the encoders have a supply of either 10…30 VDC, or 5 VDC).

Note: if the control supply encoder is not used, the +EPSR terminal (encoder + supply feedback) must be connected to +10…30 V or +5 Vand the –EPSR terminal (encoder supply feedback) must be connected to 0 V.
(1) Using the Q0 and Q1 reflex outputs from TSX CTY 2C is not compulsory for addressing encoders; as this operation can be carried out by 2 outputs from a discrete module. In this case, the shared outputs at the COM input of the TELEFAST ABE-7CPA11 must be connected.
(2) It is compulsory to set the configuration micro-switch according to the number of encoders connected on the base (OFF if 1 encoder, or ON if 2 encoders).

Example of connection: each TSX CTY 2C channel is only connected to one TELEFAST

Illustration

This diagram illustrates the connection of each TSX CTY 2C channel to one TELEFAST:

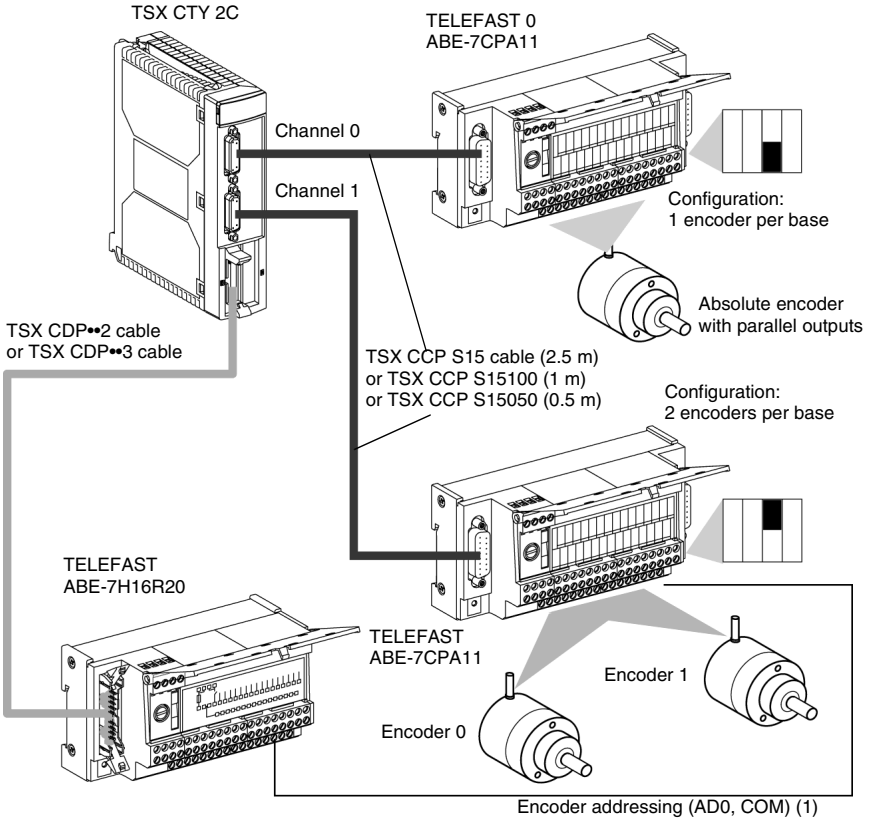

Note: (1) it is not necessary to wire the TELEFAST 0 (channel 0) encoder addressing because it has the default address of 00.

Addressing the encoders

Addressing the TELEFAST encoders is as follows:

AD1	AD0	Action
0	0	Read encoder 0
0	1	Reading encoder 1
1	0	No reading
1	1	No reading

Example of connection: 2 TELEFAST are connected on the same channel

Illustration

This diagram illustrates the connection of 2 TELEFAST on the same channel:

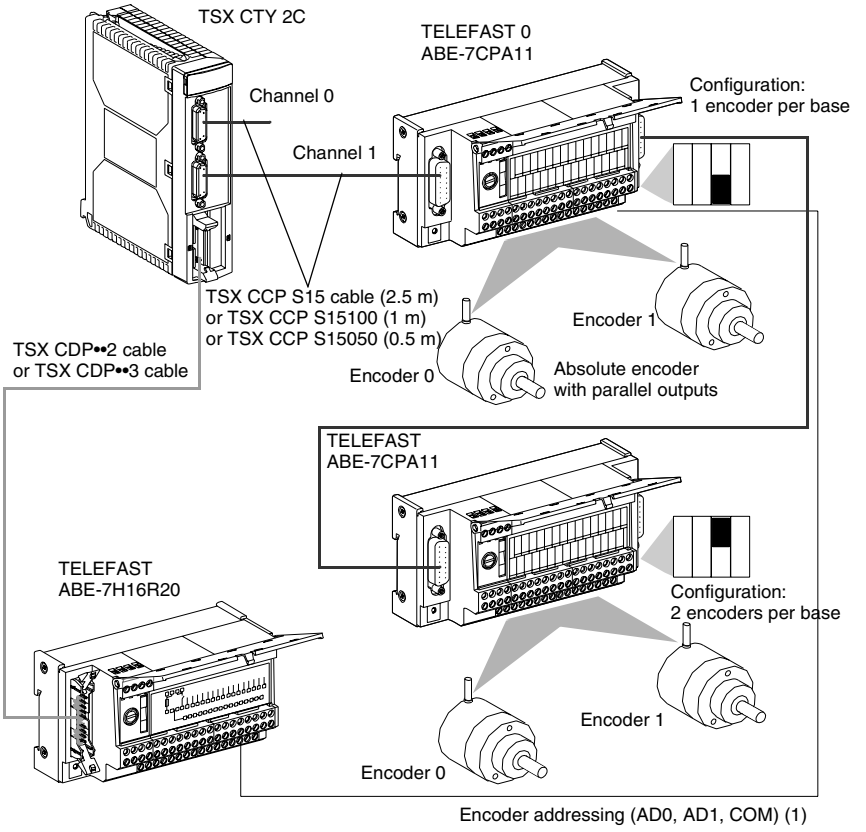

Addressing the encoders

(1) Addressing the TELEFAST encoders is as follows:

AD1	AD0	Action
0	0	Reading the TELEFAST 0 encoder 0
0	1	Reading the TELEFAST 0 encoder 1
1	0	Reading the TELEFAST 1 encoder 0
1	1	Reading the TELEFAST 1 encoder 1

Example of connection: 3 TELEFAST are connected on the same channel

Illustration

This diagram illustrates the connection of 3 TELEFAST on the same channel:

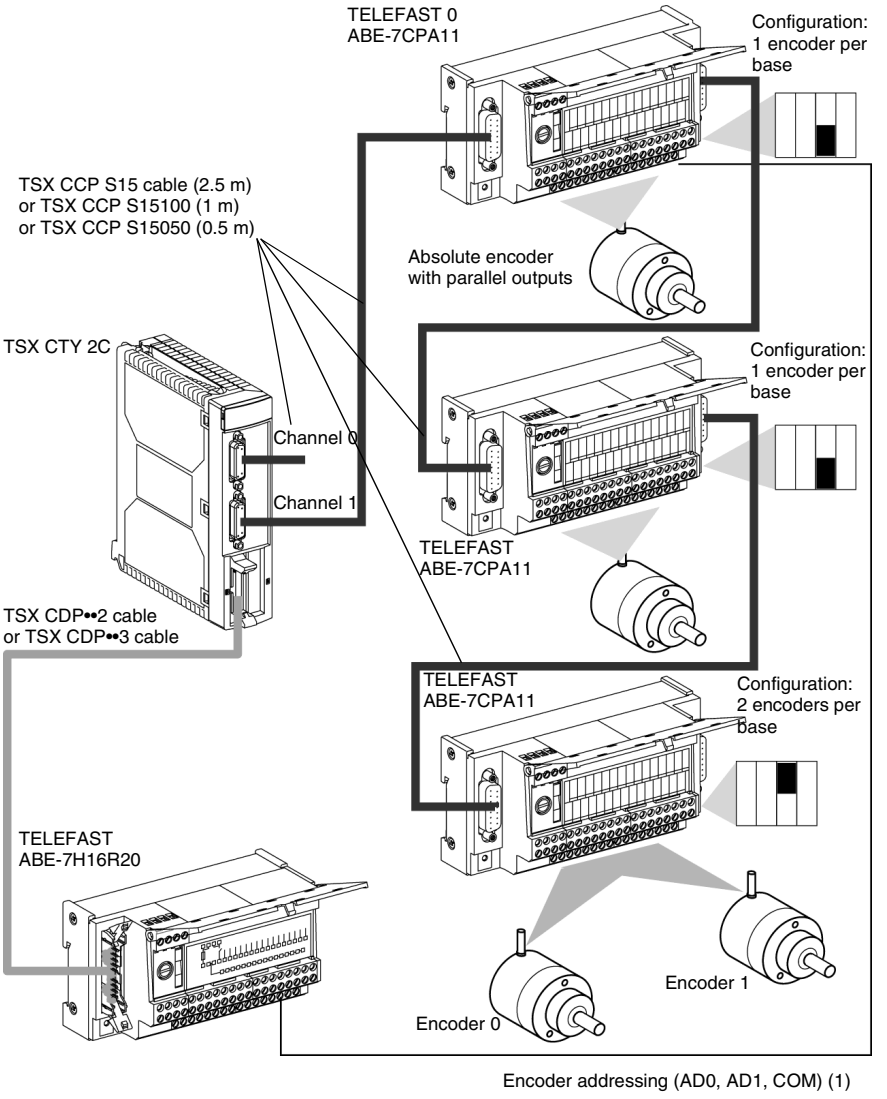

Addressing the encoders

(1) Addressing the TELEFAST encoders is as follows:

AD1	AD0	Action
0	0	Reading the TELEFAST 0 encoder
0	1	Reading the TELEFAST 1 encoder
1	0	Reading the TELEFAST 2 encoder 0
1	1	Reading the TELEFAST 2 encoder 1

If, for example, 2 encoders are wired on TELEFAST 0 and a single encoder on TELEFAST 2, the addressing becomes: 00-reading of the TELEFAST 0 encoder 0, 01-reading of the TELEFAST 0 encoder 1,10-reading of the TELEFAST 1 encoder and 11-reading of the TELEFAST 2 encoder.

Example of connection: 4 TELEFAST are connected on the same channel

Illustration

This diagram illustrates the connection of 4 TELEFAST on the same channel:

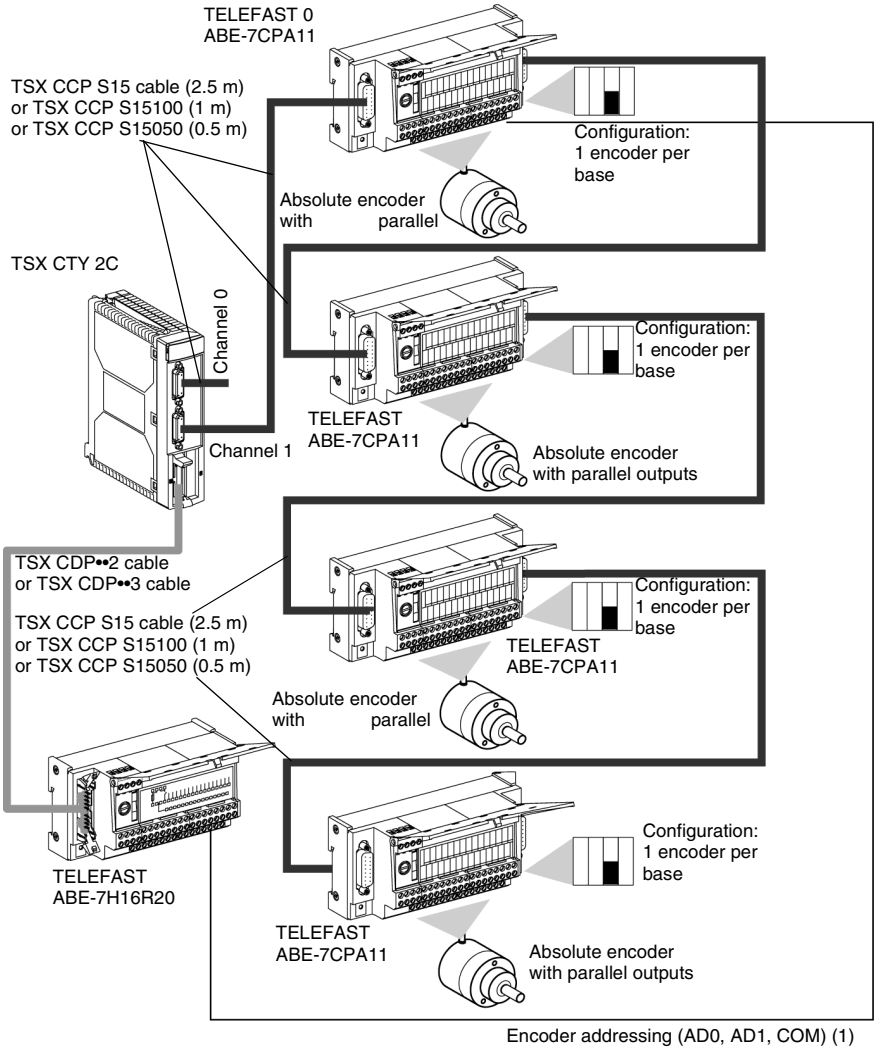

Addressing the encoders

(1) Addressing the TELEFAST encoders is as follows:

AD1	AD0	Action
0	0	Reading the TELEFAST 0 encoder
0	1	Reading the TELEFAST 1 encoder
1	0	Reading the TELEFAST 2 encoder
1	1	Reading the TELEFAST 3 encoder

Rules and precautions for wiring

Important

All connections or disconnections on the TELEFAST must be made when SWITCHED OFF (encoders, link to counting module, links between TELEFAST bases).

Connecting TELEFAST 0 to TELEFAST counting and chaining module

The TSX CCP S15 (2.5m), TSX CCP S15100 (1m) and TSX CCP S15050 (0.5m) cables are offered for connecting TELEFASTS amongst themselves or for connecting TELEFAST 0 to the TSX CTY 2C module. The user can however carry out longer links by using the wiring kit, reference no. TSX CAP S15••, and by respecting the following setpoint when the encoders have a 5 V supply : if the link between the counting module and the TELEFAST 0 does not exceed 100m, use gauge 28 wires (0.008mm^2). If it is > 100m, use wires with at least gauge 22 (0.34mm^2). However, to limit the drop in voltage at 0 V (due to the encoder supply current), we recommend that you wire the 0 V according to the following diagram.

Illustration

Wiring diagram:

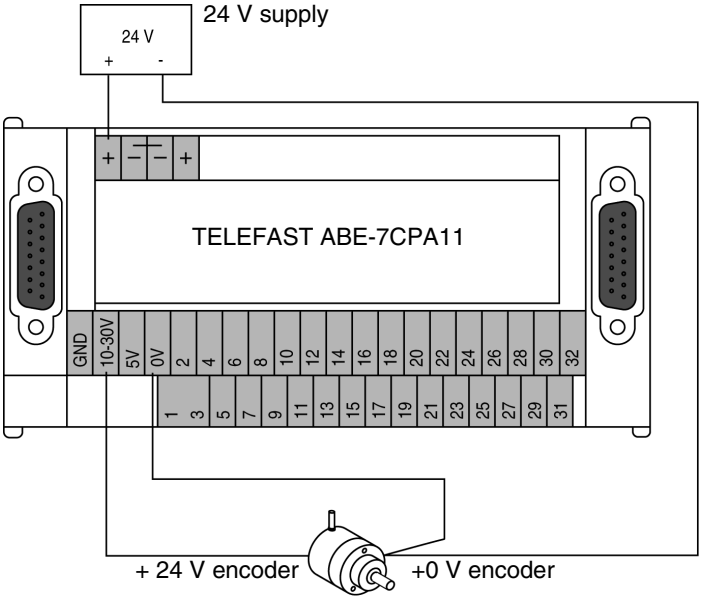

Cable length between counting module and TELEFAST

The total length of the link between the counting module and the TELEFAST (sum of the lengths between the counting channel and the first TELEFAST and the different TELEFAST between one another) must not exceed 200m, in the knowledge that the maximum cable length between 2 TELEFAST is 50m.

If the total distance between the first and the last TELEFAST exceeds 20m, the line on the right connector of the last TELEFAST must be adapted by inserting an end-of-line stopper (220 Ω resistance between pins 1 and 2 of the connector).
The following table shows the serial transmission clock frequencies, according to the total length of the link:

Cable lengths	Frequency of the serial transmission clock
< 10m	1 MHz
< 20m	750 kHz
< 50m	500 kHz
< 100m	375 kHz
< 150m	200 kHz (default)
< 200m	150 kHz

Protecting the encoder supply

The voltage used by the encoder(s) connected to TELEFAST determine whether this supply should be 10…30 VDC or 5 VDC. If the supply is 10…30 VDC, the protective fuse is built-in to the TELEFAST (fast-blow 1A fuse). However, if the TELEFAST has a supply of 5 VDC, the user must provide in series with the +supply terminal a fast-blow fuse, which is adapted to TELEFAST consumption and to the encoders connected.

Monitoring the encoder supply voltage

This function is only valid if a single encoder is connected to the TELEFAST. If the encoder supply voltage decreases by more than 15%, the default EPSR is sent back to the module.

If the encoder does not have an encoder supply feedback, you must wire:
- the TELEFAST +EPSR terminal to the + of the encoder supply,
- the TELEFAST -EPSR terminal to the - of the encoder supply.

Wiring the encoder outputs

If the encoder outputs have positive logic and there are less than 24 of them, the following rules must be adhered to:

- wire the encoder outputs to the TELEFAST inputs, working up from the least to the most significant,
- wire the unused TELEFAST inputs to the 0 V terminal.

Illustration:

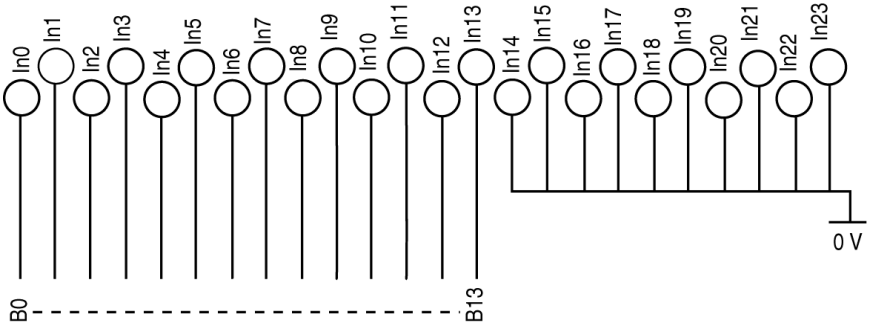

If the encoder outputs have negative logic, and there are less than 24 of them, the following rules must be adhered to:

- wire the encoder outputs to the TELEFAST inputs, working from the up from the least to the most significant,
- do not wire the unused TELEFAST inputs (leave loose).

Illustration:

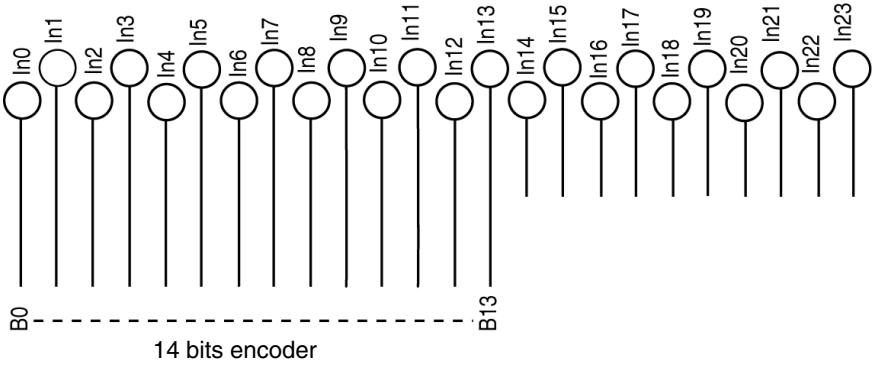

Configuration of the TELEFAST base

Introduction

The base is configured by setting the 4 micro-switches, which are located under the connector to the right of this.
They make it possible to inhibit the encoder outputs and to define the number and the type of encoders connected to the TELEFAST base.
Illustration:

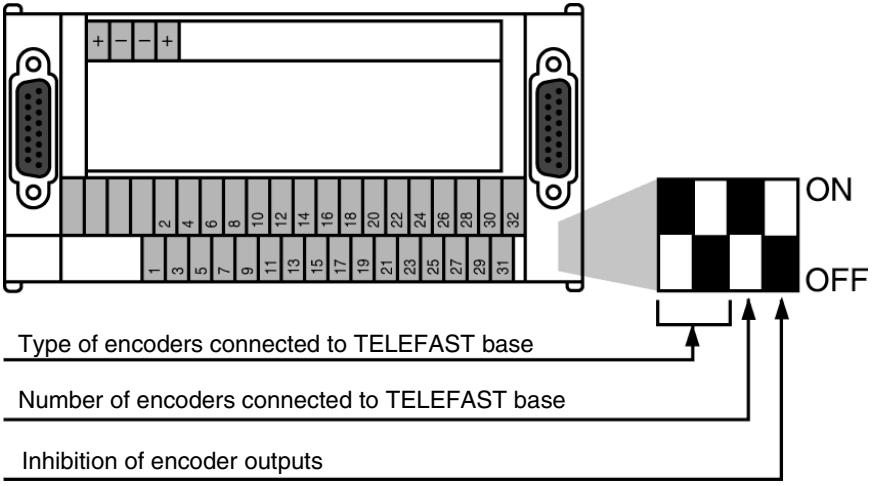

Inhibiting the encoder outputs

This micro-switch chooses the state of the 2 inhibition commands (3ST0 and 3ST1) of the encoder outputs.

Illustration	Description
	The encoder outputs are at high impedance with a 3ST0 or 3ST1 command active at 0.
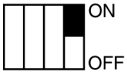	The encoder outputs are at high impedance with a 3ST0 or 3ST1 command active at 1.

Number of encoders connected to TELEFAST

This micro-switch makes it possible to define the number of encoders connected to the TELEFAST base (1 or 2 parallel output absolute encoders).

Illustration	Description
	An encoder is connected to the base.
	Two encoders are connected to the base.

If the number of connected encoders is odd and the number of TELEFAST in series is equal to 2 or 3 for one counting channel, **the TELEFAST must be configured so that the sum of the encoders equals 4**.

With 2 TELEFAST bases

This table shows the configuration if there are two TELEFAST bases:

Hardware configuration (number of encoders per TELEFAST)	TELEFAST micro-switch		Address		Action
	0	1	AD0	AD1	
2 encoders on TELEFAST 0 and 1 encoder on TELEFAST 1	ON	ON	0 0 1 1	0 1 0 1	Reading the TELEFAST 0 encoder 0 Reading the TELEFAST 0 encoder 1 Reading the TELEFAST 1 encoder Reading the TELEFAST 1 encoder
1 encoder on TELEFAST 0 and 2 encoders on TELEFAST 1	ON	ON	0 0 1 1	0 1 0 1	Reading the TELEFAST 0 encoder Reading the TELEFAST 0 encoder Reading the TELEFAST 1 encoder 0 Reading the TELEFAST 1 encoder 1

With 3 TELEFAST bases

This table shows the configuration if there are two TELEFAST bases:

Hardware configuration (number of encoders per TELEFAST)	TELEFAST micro-switch			Address		Action
	0	1	2			
1 encoder on TELEFAST 0 1 encoder on TELEFAST 1 and 1 encoder on TELEFAST 2	ON	OFF	OFF	0 0 1 1	0 1 0 1	Reading the TELEFAST 0 encoder Reading the TELEFAST 0 encoder Reading the TELEFAST 1 encoder Reading the TELEFAST 2 encoder
1 encoder on TELEFAST 0 1 encoder on TELEFAST 1 and 1 encoder on TELEFAST 2	OFF	ON	OFF	0 0 1 1	0 1 0 1	Reading the TELEFAST 0 encoder Reading the TELEFAST 1 encoder Reading the TELEFAST 1 encoder Reading the TELEFAST 2 encoder
1 encoder on TELEFAST 0 1 encoder on TELEFAST 1 and 1 encoder on TELEFAST 2	OFF	OFF	ON	0 0 1 1	0 1 0 1	Reading the TELEFAST 0 encoder Reading the TELEFAST 1 encoder Reading the TELEFAST 2 encoder Reading the TELEFAST 2 encoder

Type of encoders connected to TELEFAST

These micro-switches make it possible to define the type of encoders connected to the TELEFAST base. The following tables show the performance characteristics of the encoder/TELEFAST link, according to the code chosen by the micro-switches:

Table 1

Encoders with positive logic outputs, Totem pole outputs, TTL outputs and NPN open collector outputs coded in Gray	**Max.length encoder/ TELEFAST**	**Max. frequency for changing least significant bit**
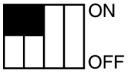	50 m	75 kHz

Table 2

Encoders with negative logic outputs, Totem pole outputs, TTL outputs and NPN open collector outputs coded in Gray	**Max.length encoder/ TELEFAST**	**Max. frequency for changing least significant bit**
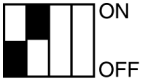	50 m	75 kHz
	100 m	40 kHz
	200 m	5 kHz

Table 3

Encoders with positive or negative logic outputs, NPN open collector, binary coded	**Max. length encoder/ TELEFAST**	**Max. frequency for changing least significant bit**
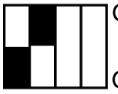	10 m	40 kHz
	30 m	20 kHz
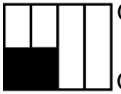	50 m	5 kHz

Note: For encoders with positive logic, TTL and Totem pole outputs, it is possible to go beyond these capacities, without exceeding the recommendations of the encoder manufacturers.

Overview of the TSX TAP S15•• wiring accessories

General

The TSX TAP S15•• wiring accessories make it possible to connect an incremental encoder to the counting module, by using a specific cable (supplied by the encoder manufacturer):

- TSX TAP S15 05: makes it possible to connect an incremental encoder with a VDC supply: encoder with RS 422 line issuer outputs,
- TSX TAP S15 24: makes it possible to connect an incremental encoder with a 24 VDC supply: encoder with totem pole outputs or open collector PNP outputs.

The TSX TAP S15•• has 2 connectors:

- a female 12-pin DIN base, labeled in an anti-clockwise direction. This connector makes it possible to connect the encoder, via a cable supplied by the manufacturer of the encoder,
- a standard 15-pin SUB-D connector making it possible to connect the module counting inputs to the SUB-D connector, using a standard TSX CCP S15 cable.

The TSX TAP S15•• product can be fixed onto a DIN rail using a bracket supplied with the accessories, or it can be fixed to a cabinet lead-in with a gasket, which is supplied with the product.

Illustration:

Incremental encoder equipped with a DIN 12 pin connector

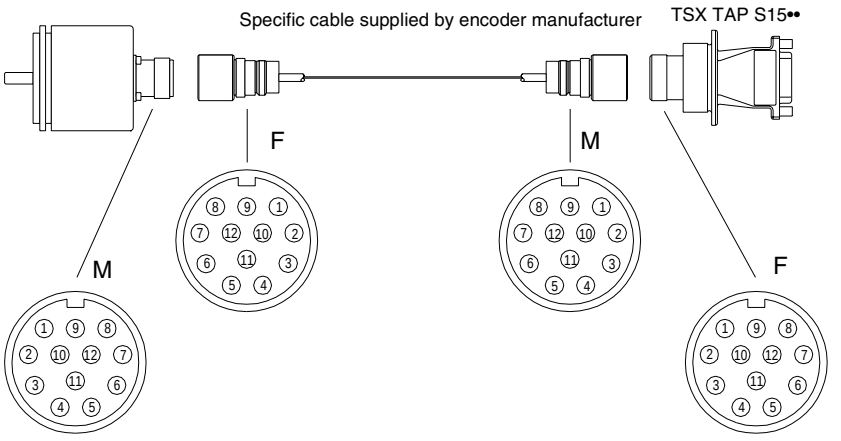

Mounting and measurements of the TSX TAP S15 05/24

Mounting on a Telequick plate

The set square supplied makes it possible to fix the TSX TAP S15 05/24 on an AM1-PA••• type perforated plate or on any other support.

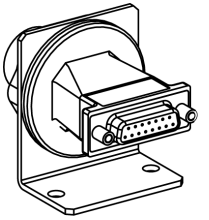

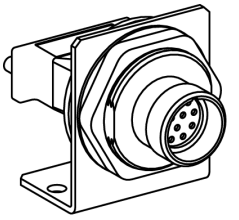

Mounting through a cabinet

Thanks to its rifle nut, the TSX TAP S15 05/24 can be mounted through a cabinet. Its seal means the area between the interior and the exterior is guaranteed to be watertight.

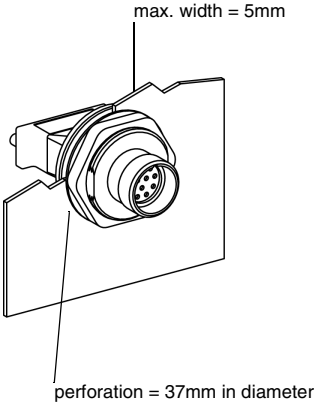

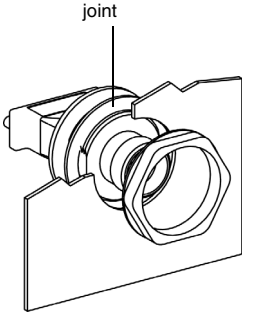

Size

Illustration:

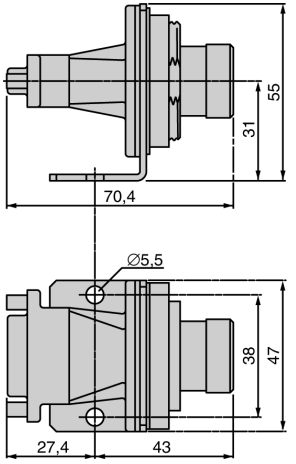

Connecting an encoder with a TSX TAP S15 05 accessory.

General

A specific cable, supplied by the manufacturer of the encoder, is used for connecting an encoder using an auxiliary TSX TAP S15 05.

Illustration

The pinout of TSX TAP S15 05 is as follows:

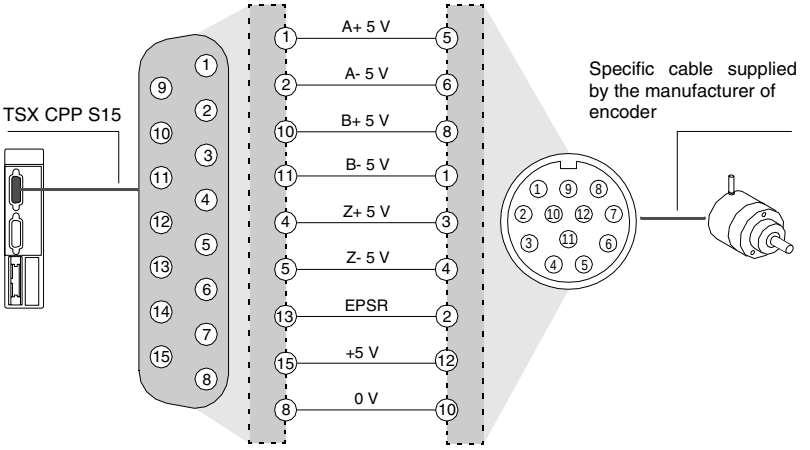

Connecting an encoder with a TSX TAP S15 24 accessory

General

A specific cable, supplied by the manufacturer of the encoder, is required for connecting an encoder using an auxiliary TSX TAP S15 24.

Illustration

The pinout of TSX TAP S15 24 is as follows:

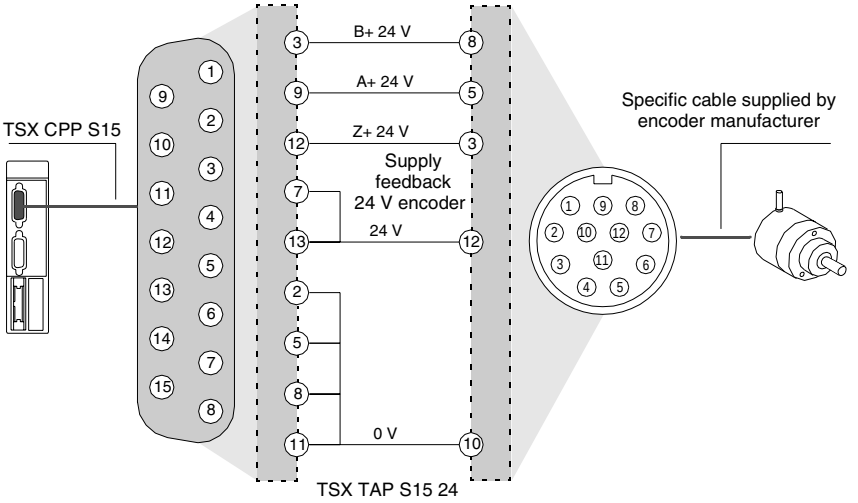

This type of connection is compatible with encoders with a 24V supply (Heidenheim, Hengstler, Codechamp, Ivo, Ideacod, etc.).

Pre-wired strands and cable

TSX CDP 301 and TSX CDP 501 pre-wired strands

These pre-wired strands (or strips) make it possible to connect the sensors, pre-actuators or terminals directly to the counting modules. They comprise 20 gauge-22 wires (0.34m^2) and are fitted with an HE10 connector at one end. The free wires at the other end are labeled with a color code according to the DIN 47100 standard. The correspondence between the color of the wires and the pin number of the HE10 connector is as follows:

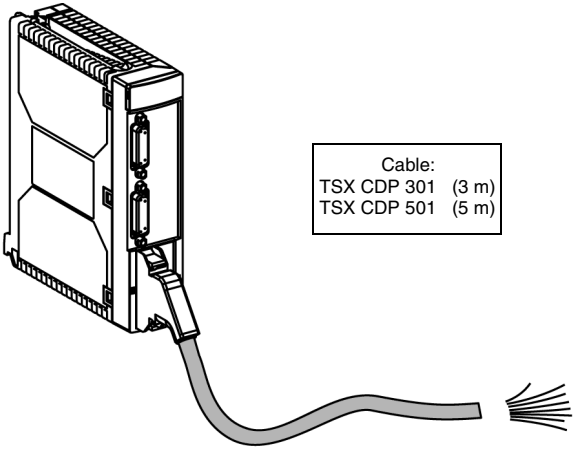

HE10			TSX CTY 2A/4A	TSX CTY 2C
1	2	white	+5 VDC	+5 VDC
		brown	0 VDC	0 VDC
3	4	green	+10...30 VDC	+10...30 VDC
		yellow	nc	nc
5	6	gray	IPres0	IPres0
		pink	IVal0	IVal0 / Q2
7	8	blue	ICapt0	ICapt0
		red	nc	Q3
9	10	black	IPres1	IPres1
		violet	IVal1	IVal1 / Q2
11	12	gray-pink	ICapt1	ICapt1
		red-blue	nc	Q3
13	14	white-green	Q0	Q0
		brown-green	Q1	Q1
15	16	white-yellow	Q0	Q0
		yellow-brown	Q1	Q1
17	18	white-gray	+24 VDC	+24 VDC
		gray-brown	0 VDC	0 VDC
19	20	white-pink	+24 VDC	+24 VDC
		pink-brown	0 VDC	0 VDC

TSX CDP 102, TSX CDP 202 and TSX CDP 302 connection cables

These stranded and clad connection cables make it possible to connect the HE10 connector of a counting module to a TELEFAST 2 (1) connection interface. They are made up of a stranded, flat cable and clad with gauge-28 wires (0.08mm^2, and are fitted with an HE10 connector at each end.
Given the small area of each of the wires, you are advised to only use these connection cables for low current inputs or outputs (< 100mA per input or output).

3 connection cable lengths are offered:
TSX CDP 102: 1 meter long,
TSX CDP 202: 2 meters long,
TSX CDP 503.302: 3 meters long.

TSX CDP 053/ 103/203/303/503 connection cable

These connection cables make it possible to connect the HE10 connector of a counting module to a TELEFAST 2 (1) connection interface. They are made up of a cable with gauge-22 wires (0.34 mm^2, and are fitted with a compound-filled HE10 connector at each end.
These cables allow higher levels of current to enter (< 500mA) than connection cables.

5 cable lengths are offered:
TSX CDP 053 : 0.5 meter long,
TSX CDP 103 : 1 meter long,
TSX CDP 203 : 2 meters long,
TSX CDP 303 : 3 meters long,
TSX CDP 503 : 5 meters long.

Module display

General

The TSX CTY 2A/4A/2C modules are fitted with LEDs on the front panel, which make it possible to view the state of the module and the counting channels:

- Module state LEDs (RUN, ERR, I/O)
  These 3 LEDs provide information on the operation mode of the module:
  - RUN indicates the state of the module operation,
  - ERR signals an error inside the module,
  - I/O signals an external module error or an application fault.
- Channel state LEDs (CH.)
  These are 2 or 4 LEDs, which make it possible to view and diagnose the state of each channel in the module.

Diagnostics

This table shows the diagnostics of the module according to the state of the LEDs:

	Lit ●	**Flashing** ⊗	**Off** ○
RUN	Module operative	/	Module switched off or experiencing a fault
ERR	Internal module error: module has broken down.	Communication error or awaiting configuration.	No error.
I/O	External module error: ● wiring fault, ● encoder supply error, ● measurement overrun. Application fault	/	No error.
CH **TSX CTY 2A/2C** CH0 and CH1 **TSX CTY 4A** CH0, CH1, CH2, CH3.	The channel is operational.	The channel is not functioning correctly due to: ● an internal fault, ● an external fault, ● a communication error, ● an application fault.	Channel inoperative: The channel is not configured, or is badly configured.

Illustration of module LEDs:

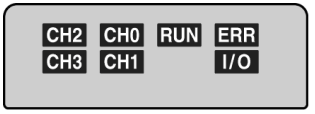

TSX CAY axis command modules

II

At a Glance

Subject of this part

This part provides an overview of the TSX CAY axis command modules, their functionality and how to implement them.

What's in this Part?

This part contains the following chapters:

Chapter	Chapter Name	Page
5	Introduction to the TSX CAY modules	145
6	Functions	151
7	Implementing	155
8	Appendices	221

Introduction to the TSX CAY modules

5

At a Glance

Subject of this chapter

This chapter provides an overview of the different TSX CAY axis command modules.

What's in this Chapter?

This chapter contains the following topics:

Topic	Page
General	146
Physical description	148

General

Introduction

The axis command and controlled placement offer for Premium PLCs is designed for machines, which require a simultaneous performing movement command and a sequential command by programmable controller.
The following modules: **TSX CAY 21** (2 axes) and **TSX CAY 41** (4 axes) make controlled placement possible on independent, linear and limited axes.
The modules **TSX CAY 22** (2 axes) and **TSX CAY 42** (4 axes) make controlled placement possible on independent, circular and infinite axes.
The module **TSX CAY 33** (3 axes) makes a placement on 2 or 3 synchronized axes (linear interpolation) possible.

Terminology

- the term TSX CAY covers everything on the axis command offer,
- the reference TSX CAY 2 regroups the TSX CAY 21 and 22 modules,
- the reference TSX CAY 4• corresponds to the TSX CAY 41 and 42 modules.

These modules in standard format (TSX CAY 2•) or double format (TSX CAY 4• and TSX CAY 33) can be installed in all the available slots of a PLC configuration (TSX, or PCX).

To ensure position measurement, an encoder (which may be a different type) is wired onto each of the channels:

- RS 422/485 incremental encoder,
- 5 V Totem pole incremental encoder,
- SSI serial absolute encoder,
- parallel output absolute encoder (with ABE-7CPA11 interface).

Illustration

This diagram illustrates different types of TSX CAY modules:

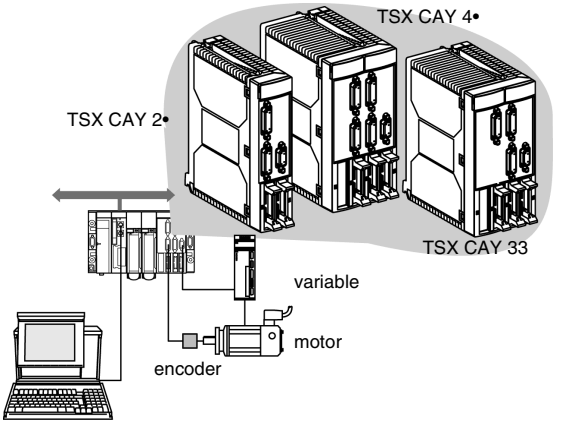

Physical description

Illustration

This diagram illustrates different TSX CAY modules:

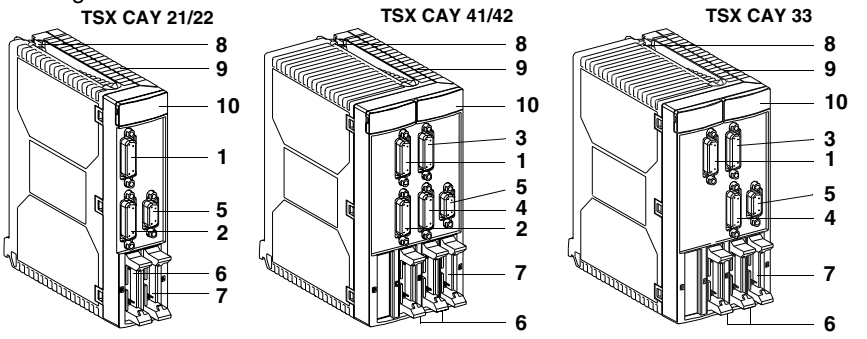

Table of numbers The following table describes the above diagrams using numbers:

Number	Description
1	15-pin SUB-D connector for connecting an axis 0 encoder.
2	15-pin SUB-D connector for connecting an axis 1 encoder.
3	15-pin SUB-D connector for connecting an axis 2 encoder.
4	15-pin SUB-D connector for connecting an axis 3 encoder.
5	9-pin SUB-D connector for connecting speed references.

6	HE10 connector(s) for connecting:
	● auxiliary inputs:
	  ● cam reference point,
	  ● emergency stop,
	  ● recalibration,
	● of auxiliary outputs,
	● of external supplies (encoders and sensors).

7	HE10 connector for connecting variable controller inputs/outputs.
8	Screw for fixing module in place.
9	Rigid body, which functions as the module captor in the slot.

10	Module diagnostic LEDs:
	● module level diagnostics:
	  ● green LED RUN: indicates the operating mode of the module,
	  ● red LED ERR: indicates an internal error,
	  ● red LED I/O: indicates an external error or application fault,
	● module channel level diagnostics:
	  ● CHx green LEDs: indicates of channel diagnostics.

Functions

6

At a Glance

Subject of this chapter

This Chapter introduces the various functions of the TSX CAY modules.

What's in this Chapter?

This chapter contains the following topics:

Topic	Page
Circuit diagram of an axis command	152
Command processing	153

Circuit diagram of an axis command

Illustration

Process diagram:

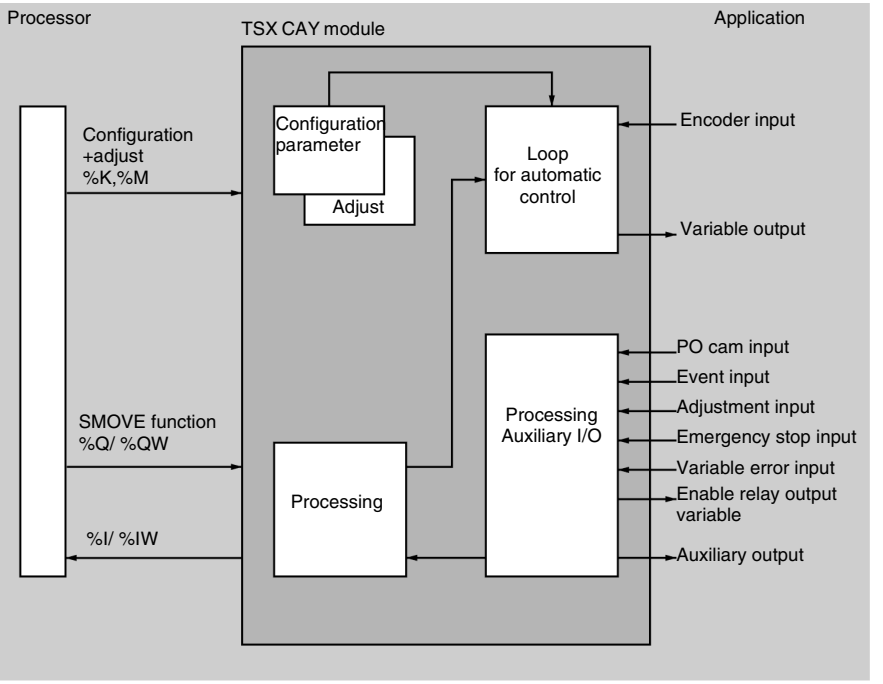

Functions provided by the axis command modules

The axis command modules provide the following functions for each axis:

- Inputs:
  - one input for the acquisition of position measurements:
    RS 485 incremental encoder or 5 V totem pole, 16 to 25-data bit SSI serial absolute encoder,
  - one machine reference point input,
  - one event input,
  - one variable default input,
  - one recalibration input,
  - one emergency stop input.
- Outputs:
  - one +/- 10 V, + sign 13-bit resolution analog output, for the speed controller command,
  - one relay output for validating the controller,
  - one auxiliary static output.

Command processing

Introduction

Each movement, controlled from the PLC sequential program, is described by a SMOVE movement command function in the PL7 language. From this SMOVE command, the TSX CAY modules work out a position/speed trajectory.

The PL7 screens make it possible to easily achieve the configuration, adjustment, and setting of the axes.

Axis configuration

The configuration screen enables the required parameters to be entered, in order to adapt the operation of the module to the characteristics of the machine. These are: the encoder type, position limits, maximum speed, etc. These parameters cannot be modified by a program. There is no default configuration.

Axis adjustment

The parameters offered by the adjustment screen are linked to axis operation. The parameters are adjusted when on or offline.

The operating parameters are:
- corrected resolution,
- mmovement control: errors of following, adjustment, overspeed, etc.,
- stop control: delay, speed, debug window,
- position loop: position gain, speed anticipation coefficient, offset,
- command: soft stops, acceleration, acceleration profile,
- manual mode parameters: speed, reference point value etc.

Note: These parameters can be changed by program.

Debug

The debug screen can only be accessed in online mode. This makes it possible to control and observe the performance of the axis.
Information and commands differ according to the operation mode chosen:
- automatic mode,
- manual mode,
- loop control disabled mode,
- measurement mode (off).

The top part of the screen indicates the operating state and diagnostics of the module. The lower part accesses the commands and indications on the operation of movement, inputs/outputs, errors, etc.

Implementing

7

At a Glance

Subject of this chapter

This Chapter describes the implementation of TSX CAY axis command modules.

What's in this Chapter?

This chapter contains the following sections:

Section	Topic	Page
7.1	General	157
7.2	Connecting speed reference signals	165
7.3	Connecting the counting signals	174
7.4	Wiring accessories	182
7.5	Connection of sensors/ pre-actuator and supply modules, without variable speed controller	191
7.6	Connecting the variable speed controller signals	202
7.7	Electrical characteristics of modules	207

7.1 General

At a Glance

Subject of this section

This Section introduces general instructions for the installation of TSX CAY axis command modules.

What's in this Section?

This section contains the following topics:

Topic	Page
Standard configuration required	158
Installation procedure	159
General precautions for wiring	160
Choice of encoders	161
Module display	163

Standard configuration required

General

The servomotor axis command modules can be installed in all the available slots in a Premium (TSX, or PCX) PLC configuration.
To be used to the maximum:

Processors	**Number of "application-specific" channels supported (*)**
TSX P57 103	8
TSX P57 153	8
TSX P57 203 / PCX 57 203 / TSX P57 2•23	24
TSX P 57 253	24
TSX P 57 2623 / TSX P 57 2823	24
TSX P 57 303	32
TSX P57 353 / PCX 57 353 / TSX P57 3623	32
TSX P57 453 / TSX P57 4823	48

(*) The term "application-specific" applies to all channels on an application-specific module (axis command counting module, etc.). TSX CAY 2 modules include 2• "application-specific" channels, TSX CAY 4• modules include 4 "application-specific" channels and TSX CAY 33 modules include 3 "application-specific" channels.

Note: TSX CAY 22/42 and 33 modules are not compatible with the old TSX P57 10 and TSX P57 20 processors.

The rack power supply must be chosen according to the number of modules installed.

Installation procedure

General

The module can be installed or removed without cutting off the rack supply voltage. The design of the modules allows this action to be carried out with the power on, in order to ensure that a device is available.



CAUTION

Connecting or disconnecting the connectors

Connecting or disconnecting connectors with sensor supplies is not recommended, as some encoders do not support this action. The auxiliary input/output connectors can be disconnected while switched on without damaging the module. However, for safety reasons it is recommended that you turn off the auxiliary supply before any type of disconnection.

Failure to follow this precaution can result in injury or equipment damage.

The module fixing screws and connectors must be correctly screwed in place in order to obtain good electrical contacts, thus guaranteeing effective resistance to electrostatic and electromagnetic interference.

General precautions for wiring

General

The supplies to sensors and actuators must be protected against overloading or excess voltage by non-delay fuses.

When wiring, use wires of a satisfactory size to avoid on-line drops in voltage and overheating,

Keep sensor and actuator cables away from any source of radiation resulting from high-power electric circuit switches.
All cables which link the incremental or absolute encoders must be shielded. The shielding should be good quality and linked to the protective ground connection on the side of the module and the side of the encoder. Continuity must be ensured throughout connections. Do not introduce any other signals than those of the encoders in the cable.

For reasons of performance, the auxiliary inputs of the module have a short response time. You must therefore make sure that the supply autonomy of these inputs is sufficient to ensure the module continues to operate correctly in the event of short power breaks. It is recommended that you use regulated supplies to ensure more reliable response times from the actuators and sensors. The 0 V supply must be linked to the protective ground connection as near to the supply output as possible.

Choice of encoders

Output interface

The output interfaces of incremental encoders or pulse generators are:
- RS 422/485 standard output, two push-pull outputs, complemented by the signal,
- 5 V Totem pole output, two complementary push-pull outputs.

Absolute SSI serial encoders have a standardized RS 485 interface for clock and data signals.
We recommend an encoder with opto type "CLOCK" signal input stage. Different types of encoders can be connected onto the same module. For example, an incremental encoder on channel 0 and an absolute SII encoder on channel 1.

Encoder supply

The module is designed to supply encoders with 5 V or 24 V. Mixing supply voltages is possible on all module channels.
Incremental encoders usually have a 5 V supply.
Absolute SSI encoders have a 24 V (10/30 V) supply.

5 V encoder supply: maximum drop in voltage.
In this case there is reason for taking the on-line voltage drop into account. This drop depends on cable length and encoder consumption for a given wire gauge.
Example for a 100m-long cable:

Section of the wire	**Drop in voltage for a 100m-long cable**			
Encoder consumption	50 mA	100 mA	150 mA	200 mA
Gauge 28 = 0.08mm^2	1.1 V	2.2 V	3.3 V	4.4 V
Gauge 22 = 0.34mm^2	0.25 V	0.5 V	0.75 V	1 V
0.5 mm^2	0.17 V	0.34 V	0.51 V	0.68 V
1 mm^2	0.09 V	0.17 V	0.24 V	0.34 V

24 V encoder supply.
This type of encoder is recommended, because it does not need a precise supply (10 V/30 V). When there is a 24 V supply, these encoders make it possible to have a very large cable, which makes the voltage drop in the cable rather insignificant. This is the case for SSI serial link encoders.

Note: If a 24 V absolute SSI serial encoder is used, it is not necessary to connect the 5 V supply.

Shielding

To ensure good working order in the case of interference, an encoder, whose metal casing is grounded by the connected device, must be chosen. The encoder must ground the connection cable shielding.

Module display

General

The TSX CAY 2•/4• and 33 modules are provided with LEDs, used to display the state of the modules and channels.

- Module state LEDs (RUN, ERR, I/O)
  Three LEDs located on the front panel of the module provide information about the module's operation through their state (LED off, blinking or lit):
  - RUN LED: indicates the operating state of the module,
  - ERR LED: indicates an internal module error,
  - I/O LED: indicates an external error.
- Channel state LEDs (CH.)
  The TSX CAY 2•/4• and 33 modules have 2, 3 or 4 LEDs, which are used to display and diagnose the state of each channel. These LEDs are green.

Diagnostic table This table shows the diagnostics of the module according to the state of the LEDs:

	Lit ●	**Blinking** ⊗	**Off** ○
RUN	Module normal	/	Module switched off or experiencing a fault
ERR	Internal module error: module has broken down.	Communication error Application missing, invalid or experiencing a fault during execution	No error.
I/O	External module error: ● wiring fault, ● Encoder supply and 10/30 V supply fault, ● absolute encoder error (*).	/	No error.
CH **TSX CAY 2•** CH0 and CH1 **TSX CTY 4•/33** CH0, CH1, CH2, CH3.	The channel is operational.	The channel is not functioning correctly due to: ● an external fault, ● a communication error, ● a processing error.	Channel inoperative. The channel is not configured, or is badly configured.

(*) application fault:
- configuration declined,
- SMOVE function declined.

Illustration of module LEDs:

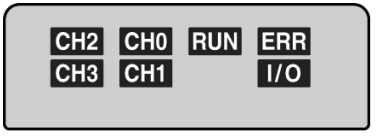

7.2 Connecting speed reference signals

At a Glance

Subject of this section

This Section deals with the connection of speed reference signals.

What's in this Section?

This section contains the following topics:

Topic	Page
Signal labeling	166
Connection using TSX CAP S9	167
Connection using TSX CDP 611 strips	168
Connection of terminals with the TELEFAST pre-wiring system	169
Correspondence between the SUB-D connector pins and the TELEFAST terminals	171
TAP MAS connection device	172
Connecting the variable using the TAP MAS device	173

Signal labeling

Process diagram

This diagram illustrates the principles for labeling signals:

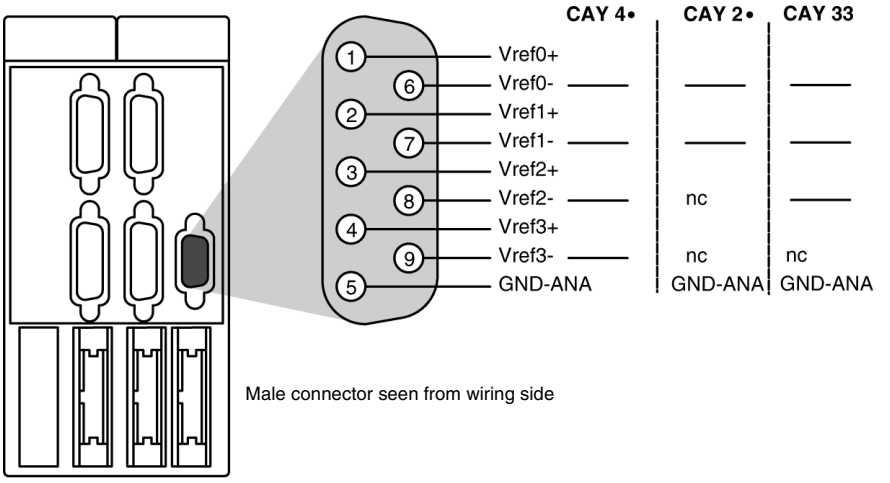

Connecting the speed references

Four types of connection are offered:

- wiring with TSX CAP S9 connector and cover,
- using the TSX CDP 611 strip,
- wiring with output on terminals with TELEFAST ABE-7CPA01,
- wiring with output on TAP MAS (exploding device).

Connection using TSX CAP S9

General

The connection is made manually by soldering onto the 9 pins SUB-D connector, as labeled in the preceding principle diagram. However, checks must be carried out to ensure that the shielding is properly connected to the cable, which must be correctly clamped to the cover of the connector.

Connection using TSX CDP 611 strips

General

This pre-wired cable is made up of a SUB-D 9-pin connector at one end, to connect to the TSX CAY module, and free wires at the other end. With a length of 6m, it is made up of 24 gage wires, corresponding to the SUB-D connector pins; It enables direct connection of the equipment to the module. The different signals are labeled using a color code.

Note: It is imperative to connect the shielding to the protective ground of the connected equipment.

Diagram of the priciple

This diagram illustrates the principle for connection using TSX CDP 611 strips:

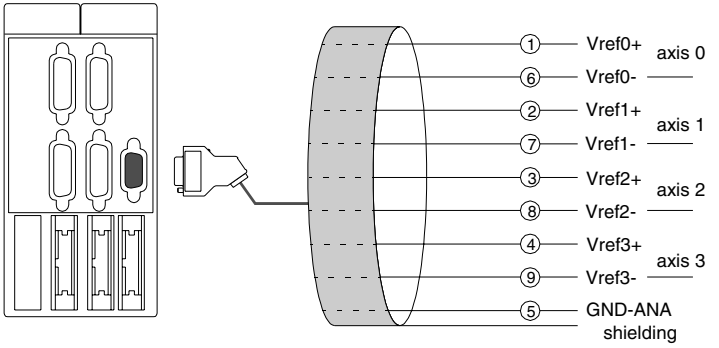

Note: the TSX CDP 611 cable is 6m in length.

Connection of terminals with the TELEFAST pre-wiring system

General

The TELEFAST 2 system is a collection of products, which allow rapid connection of the modules from the Micro and Premium range. It acts as a substitute for screw terminal blocks, by realigning the single wire connection.
The connection on speed reference terminals is necessary when the variable speed controllers are not close to each other. The TELEFAST pre-wiring system facilitates installation by allowing access to signals via the screw terminal blocks. Connection to the module with the TELEFAST reference: ABE-7CPA01 assists a cable equipped with a 9-pin SUB-D connector on the module side and a 15 pin SUB-D connector on the TELEFAST side. This cable can be: TSX CXP 213 or TSX CXP 613.

Diagram of the principle

This diagram illustrates the principle for connection with the TELEFAST pre-wiring system:

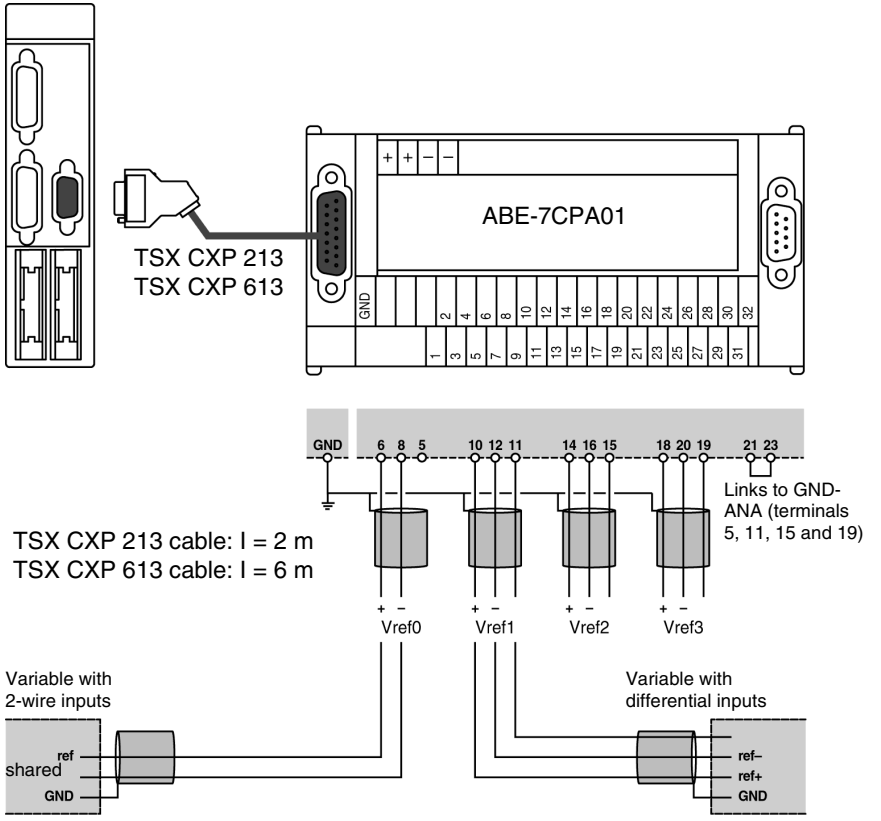

Correspondence between the SUB-D connector pins and the TELEFAST terminals

General

This table shows the correspondence between the SUB-D connector pins and the TELEFAST terminals:

TELEFAST screw terminal block (Terminal No.)	Standard SUB D 15-pin connector (Pin No.)	TSX CAY module SUB-D 9-pin connector	Kind of signal
2	1		
4	2		
5			
6	10	1	Vref0+
8	3	6	Vref0-
10	11	2	vref1+
11			
12	4	7	Vref1-
14	12	3	Vref2+
15			
16	5	8	Vref2-
18	13	4	Vref3+
19			
20	6	9	Vref3-
21			link to terminal 23
22	nc		
23	14	5	GND-ANA
24	nc		
26	nc		
28	nc		
30	nc		

TAP MAS connection device

General

The connection device enables the speed references of each variable speed controller to start again at the same time. This allows the simple connection of several variables, while maintaining good ground connection continuity.
Illustration of the connection device:

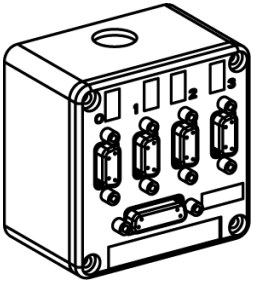

Dimensions and fixing

The TSX TAP MAS device is installed either on an AM1 PA… type perforated board or on a DIN rail with an LA9 D09976 fixation board with two M3x8 or M3x10 screws:

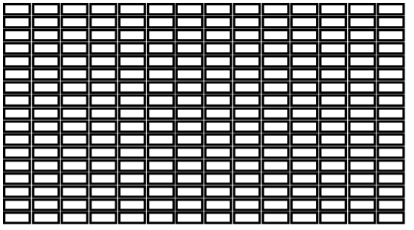

AM1-PA...

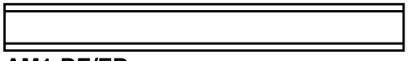

AM1-DE/ED

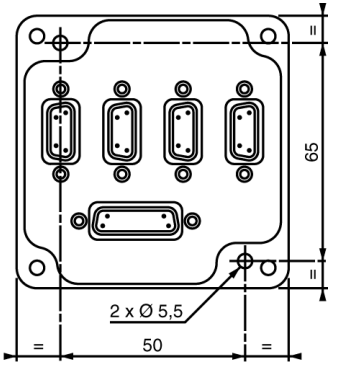

Connecting the variable using the TAP MAS device

General

The NUM MDLA modular variable speed controllers can be connected to the TSX CAY module using the TSX TAP MAS connection device. Installation is simplified by using predefined cables and the connection device, which simply directs the voltage references to the different axes.

Illustration

This diagram illustrates the principle for connection using the TAP MAS connection device:

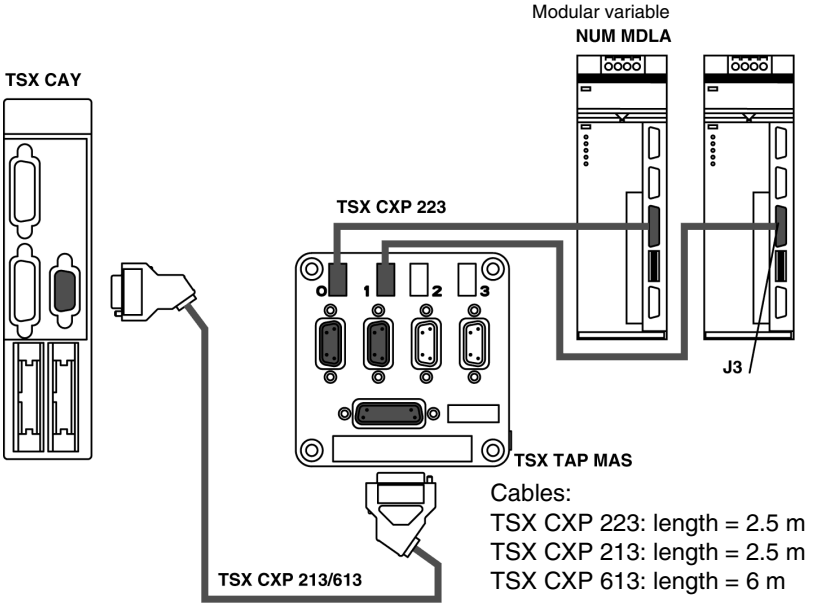

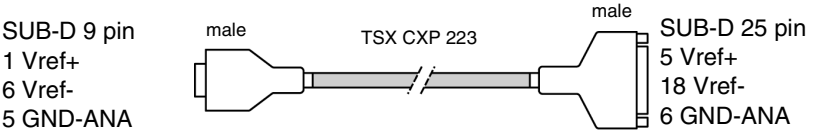

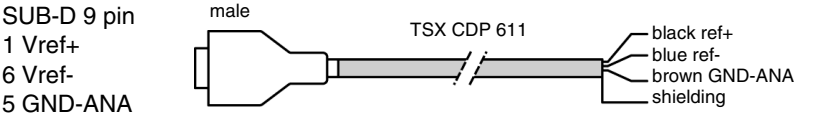

7.3 Connecting the counting signals

At a Glance

Subject of this section

This Section deals with the connection of counting signals.

What's in this Section?

This section contains the following topics:

Topic	Page
Connecting counting signals	175
Connecting an incremental encoder	178
Connecting an absolute SSI encoder	179
Connecting the encoder supply	180

Connecting counting signals

Introduction

To ensure position measurement, the TSX CAY modules are equipped with connectors allowing direct connection of an incremental or absolute SSI encoder on each channel. Each of these channels can be equipped with a different type of encoder.

Signal labeling

TSX CAY modules can be connected either to incremental encoders, or to SSI type encoders with serial links. In configuration mode, the available functions are as follows:

- Two types of interface are possible for the incremental encoders:
  - RS 422/RS 485 outputs with two outputs complemented by a signal,
  - 5 V Totem Pole outputs.
- Absolute SSI encoder, standard RS 485 interface.

A 15-pin SUB-D connector is assigned to each channel. This also allows the encoder supply. These supplies are elaborated from the +supply discrete HE10 connector. Signal: +return supply encoder, from the encoder allows monitoring for accidental disconnection of the encoder.

Illustration

This diagram illustrates the principles for labeling signals:

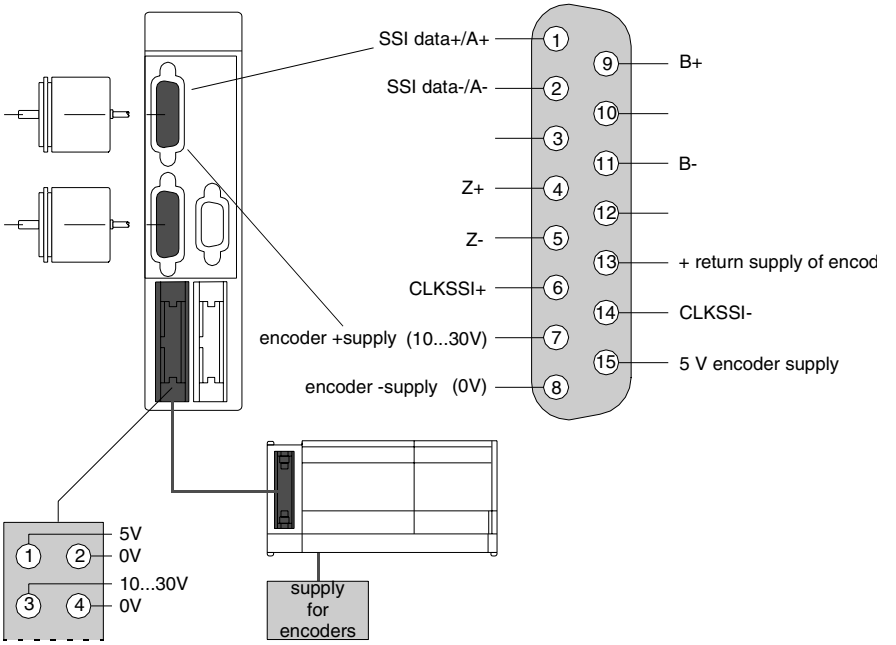

Branching

Branching table:

Element	Designation	Terminal
Incremental encoder	input A+	1
	input A-	2
	input Z+	4
	input Z-	5
	input B+	10
	input B-	11
	return supply of encoder	13
Absolute SSI encoder:	+ SSI Data	1
	- SSI data	2
	CLKSSI+	6
	CLKSSI-	14
5 V encoder supply	+supply (5 V)	15
	- supply (0 V)	8
Encoder supply (10-30 V)	+supply (10-30 V)	7
	- supply (0 V)	8

Connecting an incremental encoder

Connection diagram

The type of interface is either RS 422 / RS 485 or totem pole:

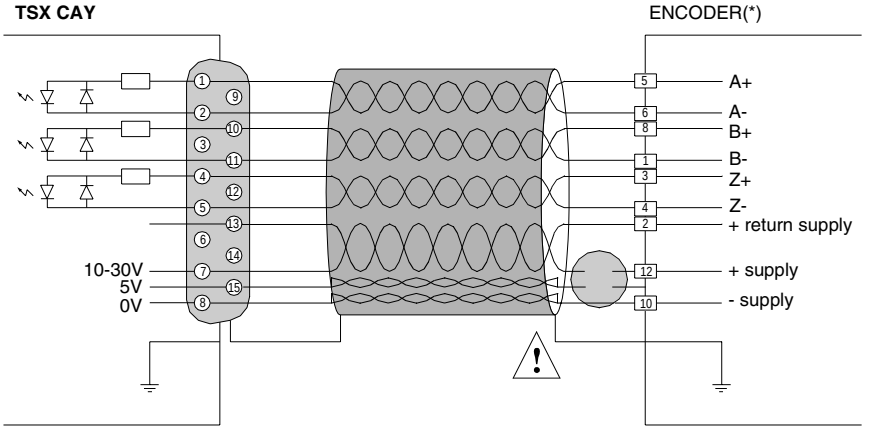

(*) standard pinouts for an encoder equipped with a 12-pin DIN connector.

Each signal (A+, A- for example) should be connected by a twisted pair. To reduce on-line voltage falls, it is recommended to connect each supply point using a pair. Cable shielding should be connected at each end to the protective ground.

	CAUTION
	+supply encoder input The +supply encoder input of the DIN connector is linked to a 10-30 V supply wire or a 5 V wire, according to the type of encoder used. **Failure to follow this precaution can result in injury or equipment damage.**

Connecting an absolute SSI encoder

Connection diagram

illustration:

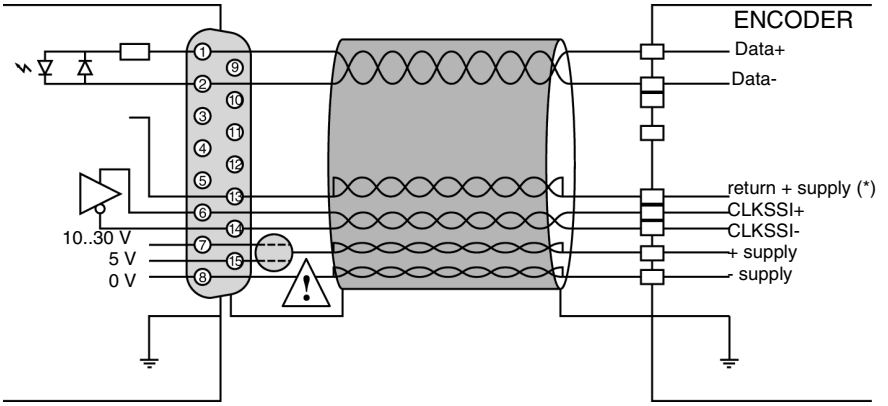

	WARNING
	Connecting the encoder supply The encoder supply is linked to pin 15 or 7 of the SUB-D connector, according to the encoder supply voltage. **Failure to follow this precaution can result in death, serious injury, or equipment damage.**

(*) + return supply: encoder output, which returns the supply voltage to the module, therefore allowing the module to monitor the presence of the encoder.

Connecting the encoder supply

Diagram of the principle

This diagram illustrates the connection of the encoder supply:

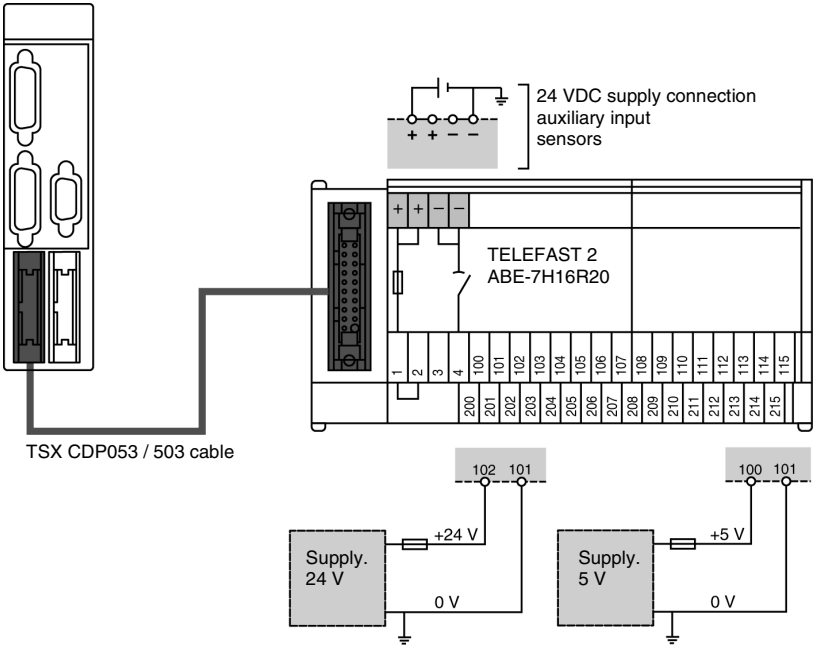

Cable length:

Cable	Length
TSX CDP 053	0.5 m
TSX CDP 103	1 m
TSX CDP 203	2 m
TSX CDP 303	3 m
TSX CDP 503	5 m

Note: The maximum length of the wire between the supply outputs and the connection points on the TELEFAST should be less than 0.5 m.
Only one supply is required if the encoders on the two channels are of the same type.

Fuses

This module integrates several basic protection systems against wiring errors and accidental short circuits on the cable:

- polarity inversions of the supplies,
- inversion of 5 V supplies <--> 10/30 V,
- 10/30 V short circuit on the CLOCK signal of the serial link.

The module cannot tolerate them for very long time, it should therefore have very fast blow fuses. The fuses should therefore be "rapid" and of 1A caliber maximum. Supplies should have a limitation current, such that the blow of the fuse can be correctly executed.

7.4 Wiring accessories

At a Glance

Subject of this section

This Section introduces the wiring accessories for the TSX CAY modules.

What's in this Section?

This section contains the following topics:

Topic	Page
Encoder connection accessories	183
Information on FRB type 12 pin connectors	185
TSX TAP S15 05 mounting and dimensions	187
Connecting absolute encoder // via a TELEFAST with ABE-7CPA11 adaptation	189
Connecting to a NUM MDLA variable speed controller	190

Encoder connection accessories

General

A number of accessories are available to facilitate implementation and installation. These accessories are used to pre-wire the installation. A direct link with the installation can be established using cover kits containing the 15 pin SUB-D connector, TSX CAP S15. To facilitate installation, the TSX TAP S15 05 is used as an interface between the SUB-D and 12 pin DIN connector. Using a fixing hook, this accessory can be mounted on a DIN rail or on a cabinet lead-in with a gasket and adjusting nut. Connection to the module is via a 2.5m long TSX CCP S15 cable.

Examples

Illustration:

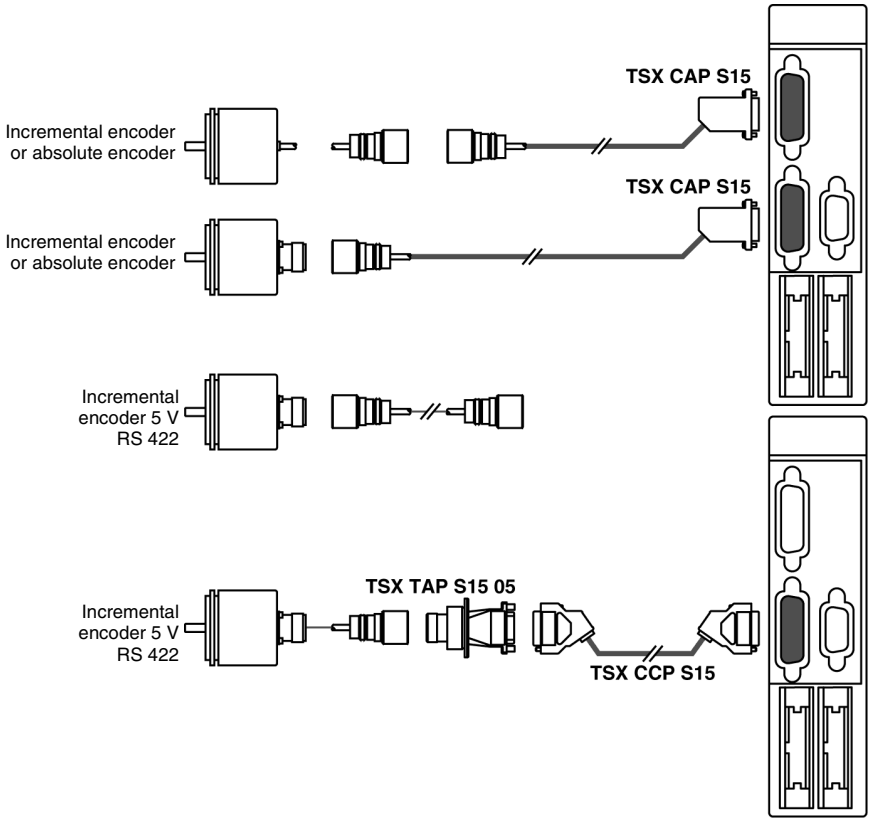

Note: Good signal and shielding continuity can be ensured in difficult conditions thanks to these accessories. Encoder connection cables can generally be obtained from encoder suppliers.

Information on FRB type 12 pin connectors

General

Number labeling of pins in these connectors is performed in two different ways. Most encoders have a built-in 12 pin base and are labeled anti-clockwise. The TSX TAP S15 has a 12 pin female base labeled anti-clockwise. All user cables must be equipped with connecting plugs labeled clockwise, so that the pin numbers correspond to one another when wired.
Illustration:

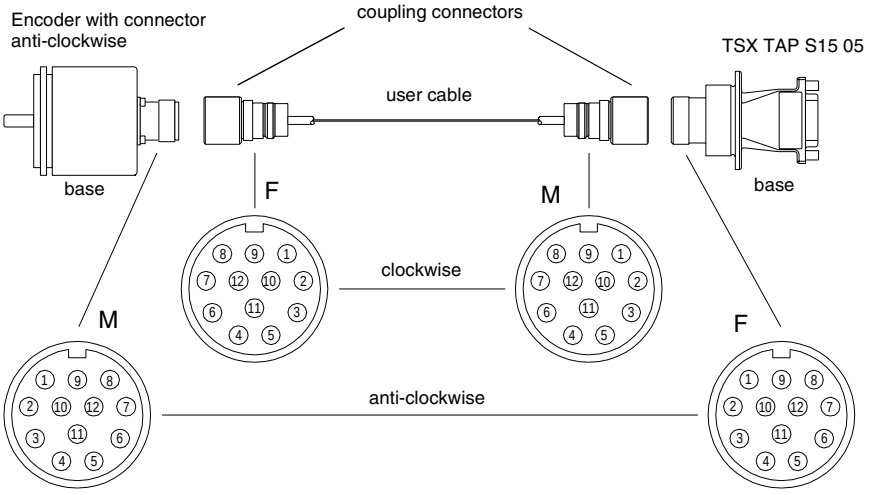

Labeling of the DIN and 15 pin SUB-D connector of the TSX TAP S15 05

Table of numbers:

DIN Pin	Signal	SUB_D Pin
1	B-	11
2	Supp return	13
3	Z+	4
4	Z-	5
5	A+	1
6	A-	2
7	nc	
8	B+	10
9	nc	
10	0 V	8
11	nc	
12	5 V	15

Shielding should be continuous along the connections which should be linked to the mechanical ground connection on both sides.

TSX TAP S15 05 mounting and dimensions

Mounting onto a Telequick board

The TSX TAP S15 05 can be attached to an AM1-PA••• type perforated board or any other support using the bracket supplied.

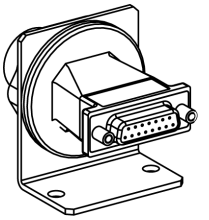

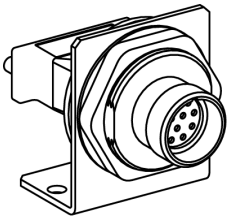

Mounting through a cabinet

The TSX TAP S15 05 can be mounted through a cabinet as it has a fixing nut. Its joint creates an impervious seal between the interior and exterior.

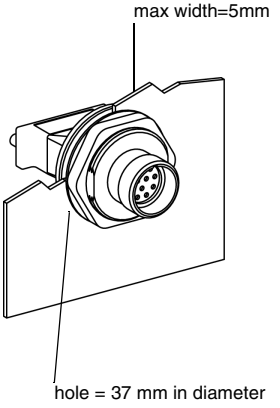

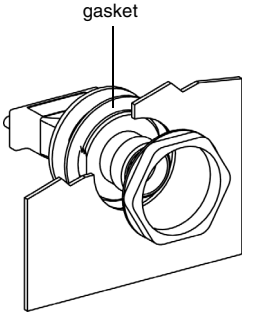

Dimensions

Illustration:

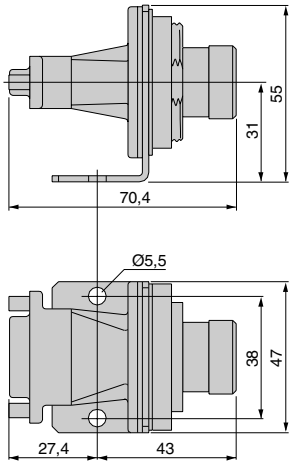

Connecting absolute encoder // via a TELEFAST with ABE-7CPA11 adaptation

General

- the multiplexing function must not be used: each channel uses a base, to which only one absolute encoder with parallel outputs is connected,
- the encoder frame should be configured as follows:
  - code: binary or Gray (according to the encoder type),
  - header bits: 0,
  - data bits: 24 (irrespective of the number of encoder data bits),
  - status bits: 3,
  - rank of the error bit: 1 (optional),
  - parity: even.

Illustration

This diagram shows the connection between a TSX CAY and a TELEFAST ABE-7CPA11:

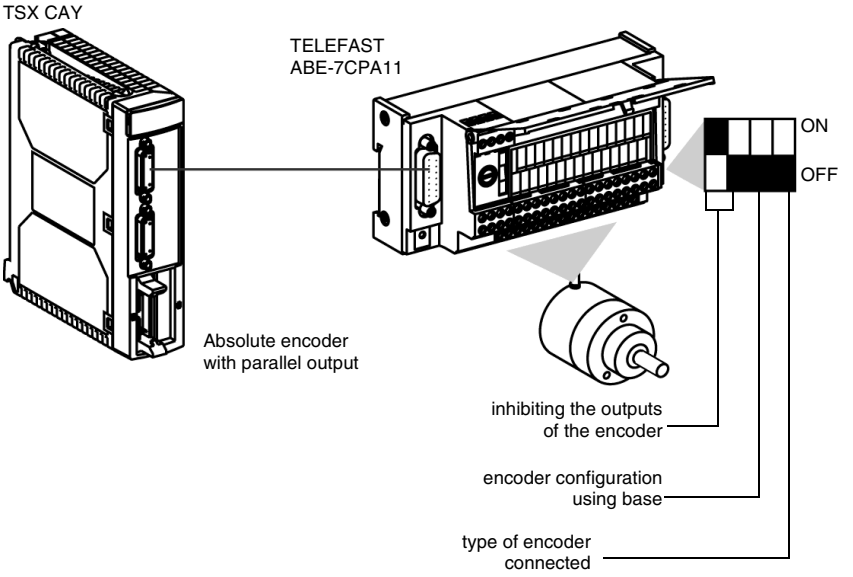

Connecting to a NUM MDLA variable speed controller

General

The NUM 400 V controller contains all the elements necessary to functioning. It offers an output whose signals simulate the functioning of an incremental encoder as a position report. Direct connection is possible using the 2.5 cm or 6m long TSX CXP 233 / 633 cable accessory.

Illustration

Connection to a variable speed controller:

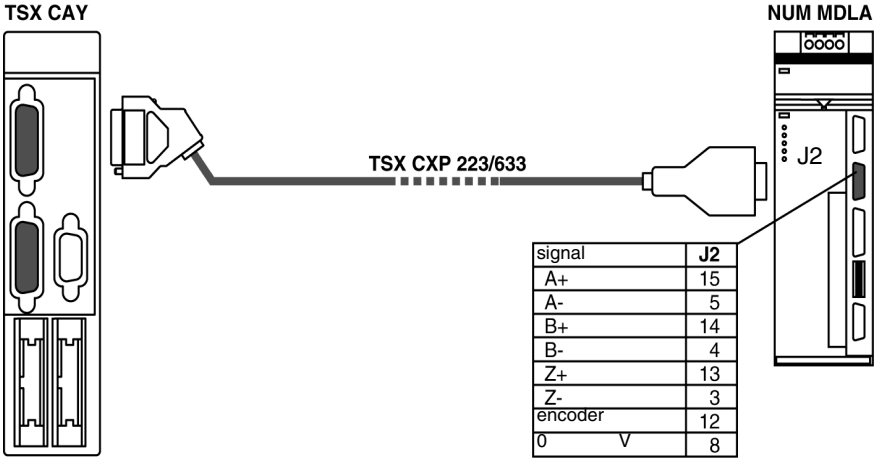

Cable length:

Cable	Length
TSX CXP 213	2.5 cm
TSX CXP 633	6 m

Note: Here, it is not necessary to have an encoder supply.

7.5 Connection of sensors/ pre-actuator and supply modules, without variable speed controller

At a Glance

Subject of this section

This Section deals with the connection of sensors/pre-actuators and supply modules without a variable speed controller.

What's in this Section?

This section contains the following topics:

Topic	Page
General	192
TELEFAST connection and wiring accessories	194
Availability of signals on TELEFAST	195
Example of connecting sensors to the auxiliary inputs and their supply.	196
Correspondence between TELEFAST terminal blocks and module HE10 connector	197
Connection using TSX CDP 301 or 501 strips	199
Wiring precautions	200

General

Introduction

The TSX CAY modules integrate basic inputs/outputs, which ensure complete functioning of the movement command, as well as ensuring the encoder supply.

Signal labeling

The connector is a high density HE10:

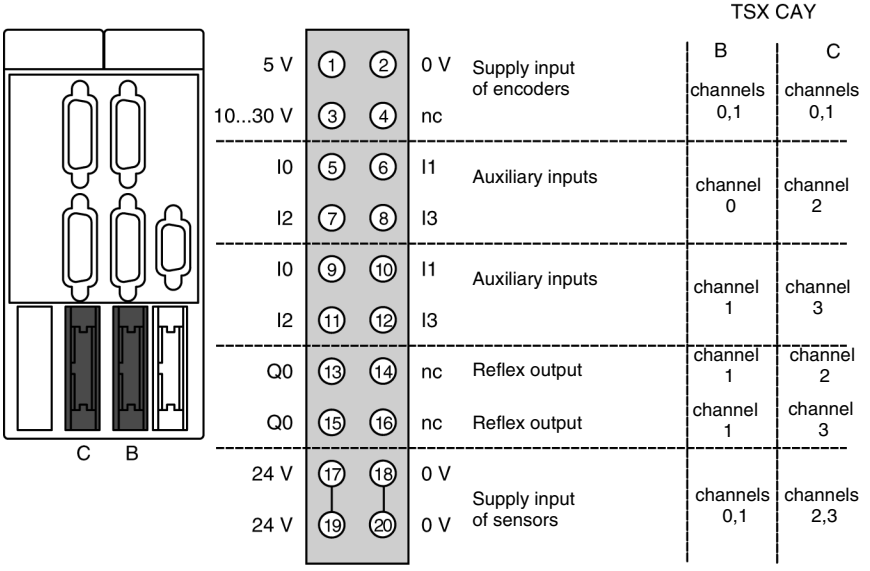

TSX CAY 2• module: Channels 0 and 1
TSX CAY 4• module: Channels 0,1,2 and 3
TSX CAY 33• module: Channels 0,1 and 2

The auxiliary inputs/outputs are allocated the following functions:

- I0 = cam reference point input,
- I1 =emergency stop input (stop if there is no current in the input),
- I2 = adjusting input,
- I3 = adjustment input,
- Q0 = reflex output (static output),
- 0 V = shared auxiliary inputs and reflex outputs.

Principle for connecting the I/O associated with channel 0

Illustration:

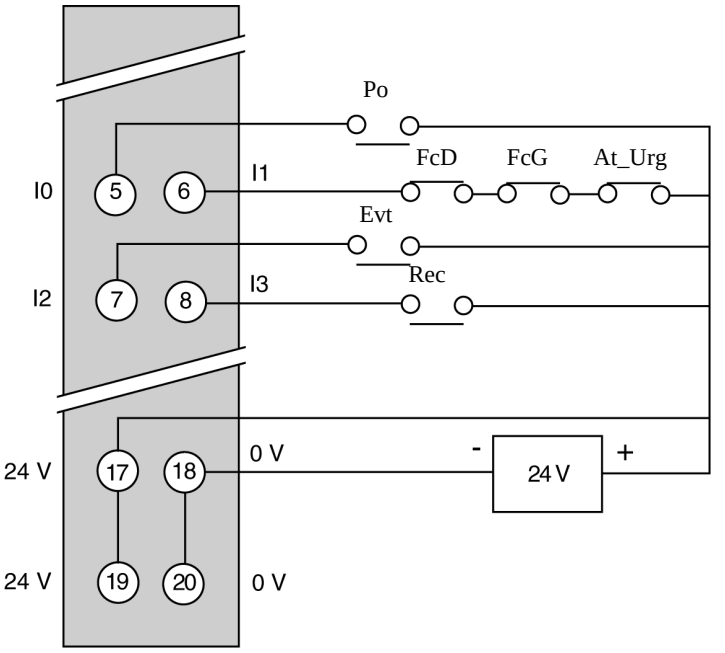

TELEFAST connection and wiring accessories

General

When connecting this high density connector, it is recommended that you use the discrete TELEFAST ABE-7H16R20 pre-wiring accessory and the TSX CDP 053/503 cable or a 3m long strip of the 20-wire TSX CDP 301 or a 5m strip of the TSX CDP 501, which contains a HE10 connector at one end and free wires at the other.

Illustration

Discrete TELEFAST wiring:

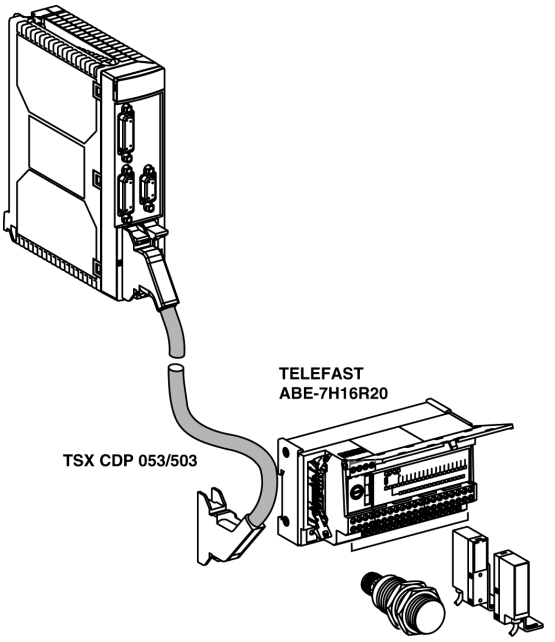

Cable length:

Cable	Length
TSX CDP 053	0.5 m
TSX CDP 103	1 m
TSX CDP 203	2 m
TSX CDP 303	3 m
TSX CDP 503	5 m

Availability of signals on TELEFAST

Illustration

The terminal below represents the terminal of the ABE-7H16R20 base. The signals are represented using TSX CDP 053 / 503 cable:

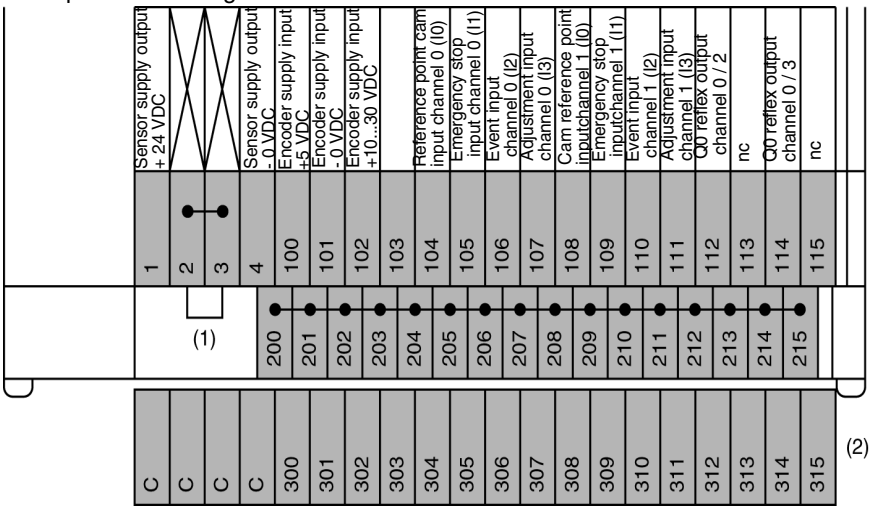

(1) At the ABE-7H16R20 base, the position of the jumper wire determines the polarity of all terminals from 200 to 215:

- jumper wire in position 1 or 2: terminals 200 to 215 have + polarity,
- jumper wire in position 3 or 4: terminals 200 to 215 have - polarity,

(2) At the ABE-7H16R20 base, it is possible to add an optional ABE-7BV20 strip to create a second shared sensor (+ or - according to user's choice).

Example of connecting sensors to the auxiliary inputs and their supply.

Illustration

This connection is made using a TELEFAST 2 connection base: ABE-7H16R20:

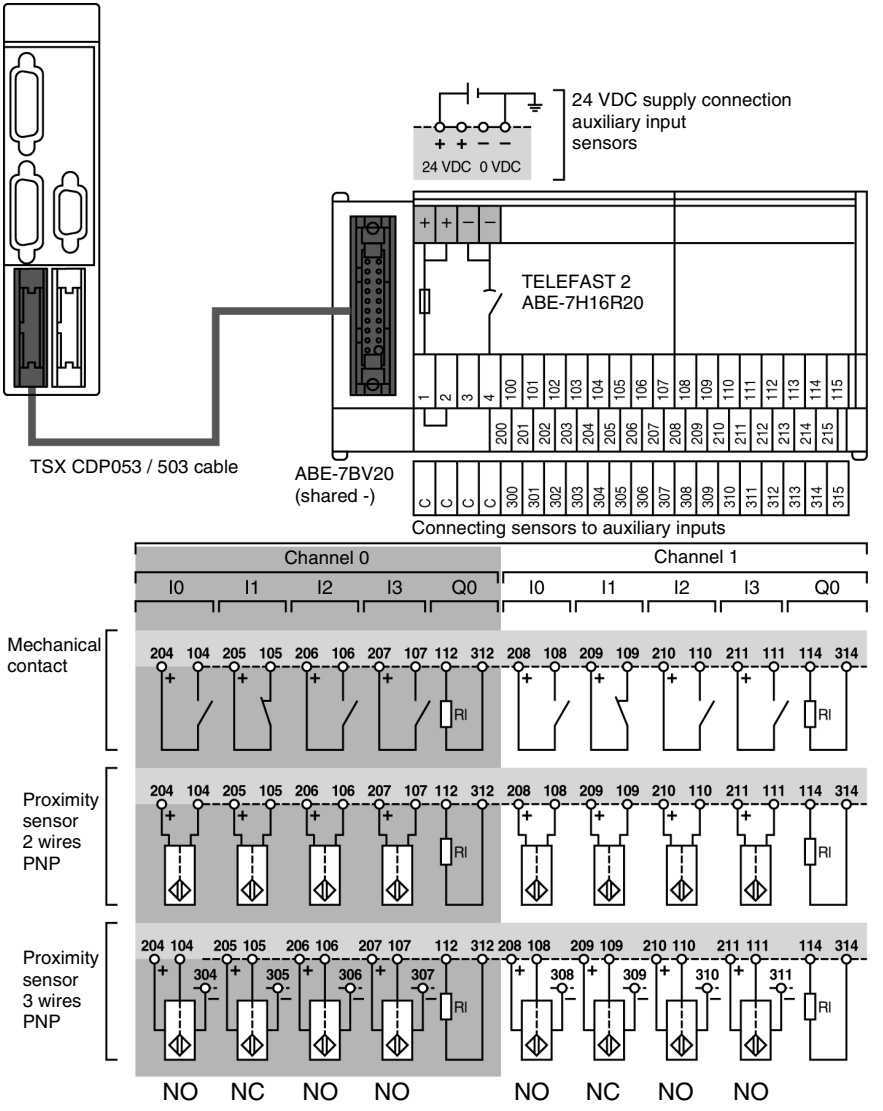

NO: Normally Open.
NC: Normally Closed (Conductor).

Correspondence between TELEFAST terminal blocks and module HE10 connector

General

This table shows the correspondence between TELEFAST terminals and the module's HE10 connector:

TELEFAST screw terminal block (Terminal No.)	HE10 20-pin connector (Pin No.)	Kind of signal	
100	1	+ 5 VDC	Encoder supply
101	2	- 0 VDC	
102	3	+10...30 VDC	
103	4	nc	
104	5	Reference point cam input I0 (channel 0)	Channel 0 auxiliary inputs:
105	6	Emergency stop input I1 (channel 0)	
106	7	Event input I2 (channel 0)	
107	8	Recalibration input I3 (channel 0)	
108	9	Reference point cam input I0 (channel 1)	Channel 1 auxiliary inputs
109	10	Emergency stop input I1 (channel 1)	
110	11	Event input I2 (channel 1)	
111	12	Recalibration input I3 (channel 1)	
112	13	Q0 reflex output (channel 0)	
113	14	nc	
114	15	Q0 reflex output (channel 1)	
115	16	nc (1)	
+ 24 VDC	17	Auxiliary input sensor supply	
- 0 VDC	18		
+ 24 VDC	19		
- 0 VDC	20		
1		Terminals 200 to 215 at + 24 VDC	
2			

TELEFAST screw terminal block (Terminal No.)	HE10 20-pin connector (Pin No.)	Kind of signal
3		Terminals 200 to 215 at –0 VDC
4		
200...215		Connecting shared sensors to: • + 24 VDC if terminals 1 and 2 are connected, • - 0 VDC if terminals 3 and 4 are connected
300...315		On the optional ABE-7BV20 bar, the terminals that can be used as a shared sensor must be connected by a wire to the shared voltage.

(1) nc = not connected

The same wiring applies to the TSX CAY 4• modules for channels 2 and 3, as well as for channel 2 of the TSX CAY 33 module.

Connection using TSX CDP 301 or 501 strips

Introduction

Connection using strips allows a direct connection to actuators, pre-actuators or terminals. This strand comprises 20 gage 22 wires (0.34 mm^2) with a HE10 connector at one end and free wires at the other end, each identified using a color code.

Illustration

This diagram shows the relation between the color of the wires and the pin number of the HE10 connector:

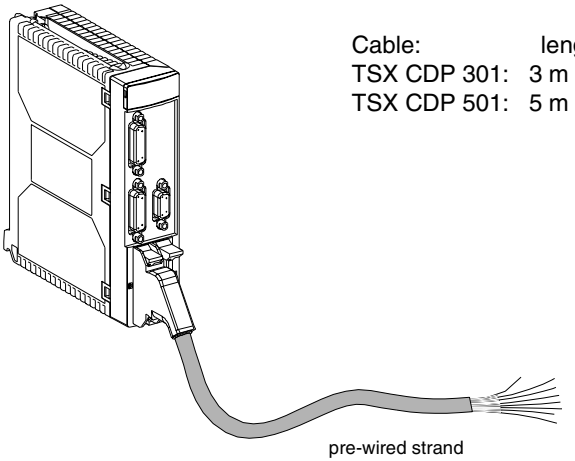

Cable:	length
TSX CDP 301:	3 m
TSX CDP 501:	5 m

pre-wired strand

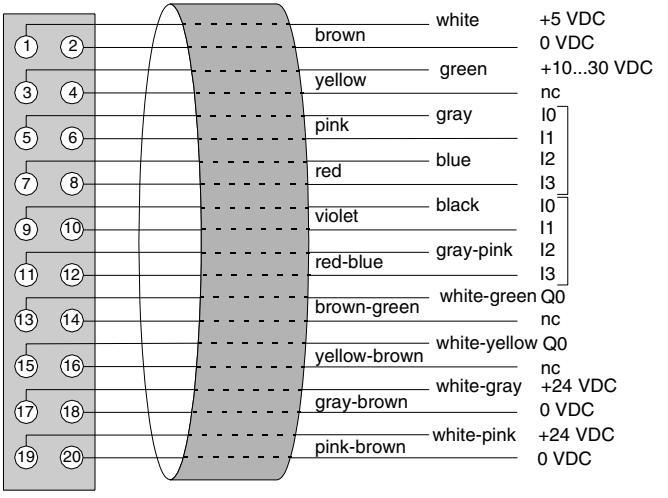

Wiring precautions

General

The I0, I1 and I3 inputs are rapid inputs, which should be connected to the sensor using either a twisted wire if it is a dry contact, or using shielded cables if it is a 2 or 3-wire proximity sensor.
The module integrates basic protection against short circuits or voltage inversions. However, the module cannot remain operational for long with an error. You must therefore ensure that the fuses in series with the supply carry out their protective function. These are 1A maximum non-delay fuses, the supply energy must be sufficient to ensure their fusion.

Important note: wiring of Q0 static outputs

The actuator connected to the Q0 output has its shared point at 0 V of the supply. If for any reason (poor contact or accidental unplugging) there is a 0 V outage of the output amplifier supply, when the 0 V of the actuators remains connected to the 0 V supply, there may be enough mA output current from the amplifier to keep low-power actuators locked.
Illustration:

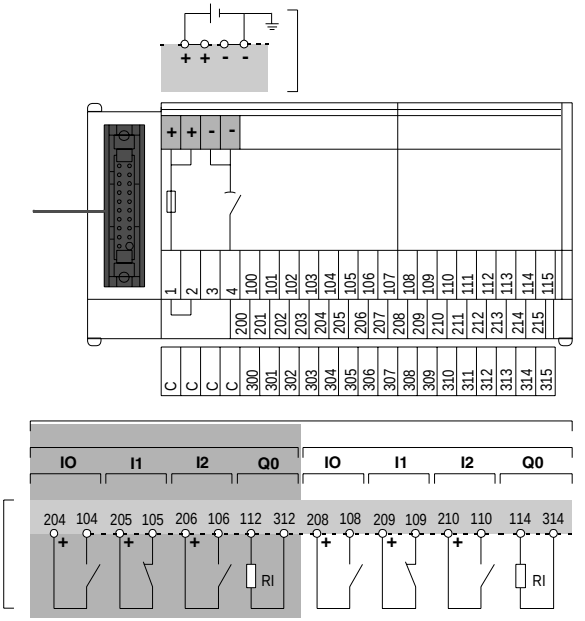

Connection via TELEFAST

This kind of connection provides the most guarantees, on condition that the shared actuators are connected to the bar for shared points 200 to 215 (jumper wire in position 1-2). In this case there can be no outage of the shared module without an outage of the shared actuators.

Connection using strips

This kind of connection must be carried out with the highest care and attention. It is recommended that you take special care in wiring this cable, for example using cable markers on screw terminals. It may be necessary to double the connections in order to ensure permanent contacts. When the actuator supply is a long distance away from the modules and close to the shared actuators, there may be an accidental break in the link between the latter and the 0 V or modules terminal
Illustration:

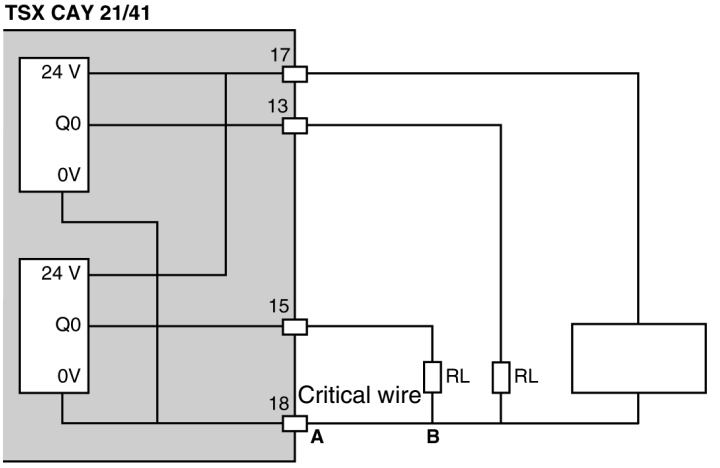

If there is a break of the supply section between A and B, there is a risk that the RL actuators may not remain operational. You must, if possible, double connections of 0 V supply to the modules.
Using TSX CDP 301/501 strips:

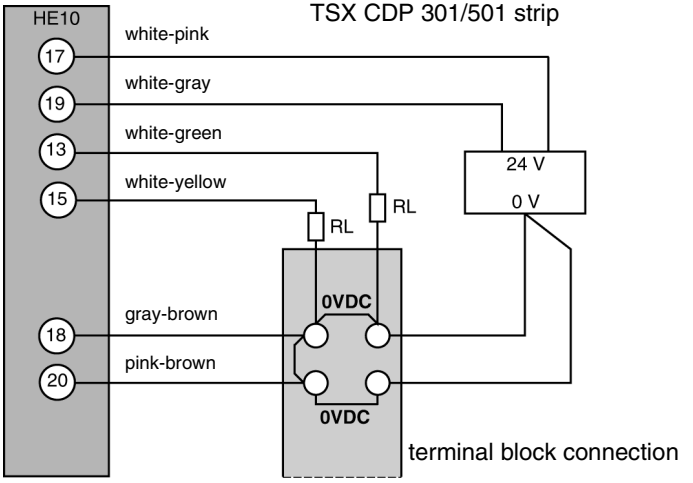

7.6 Connecting the variable speed controller signals

At a Glance

Subject of this section

This Section deals with the connection of variable speed controller signals.

What's in this Section?

This section contains the following topics:

Topic	Page
Signal labeling	203
Connection using the TELEFAST pre-wiring system	205
Correspondence between TELEFAST terminals and HE10 connector	206

Signal labeling

General

The TSX CAY modules implement basic management of the signals necessary for correct operation of the variable speed controllers. There is only one connector, regardless of the number of TSX CAY module channels.
Illustration:

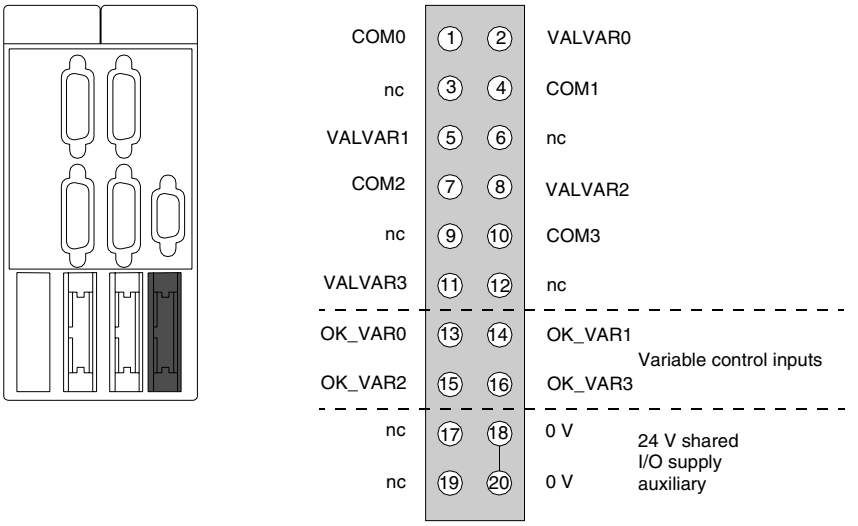

COMx – VALVARx: potential free contact to validate variable speed controller
OK_VARx: variable speed controller input check
24 V – 0 V sensor supply

Note: Each channel uses a potential free closing contact.

Principle for connecting the variable speed controller I/O associated with channel 0

Illustration:

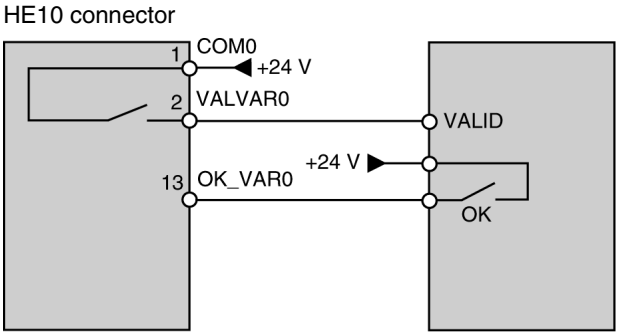

To connect this HE10 connector, use the discrete ABE-7H16R20 TELEFAST wiring accessories and the TSX CDP 303 or TSX CDP 503 cable.

Connection using the TELEFAST pre-wiring system

Diagram of the principle

This diagram illustrates the principles for connection:

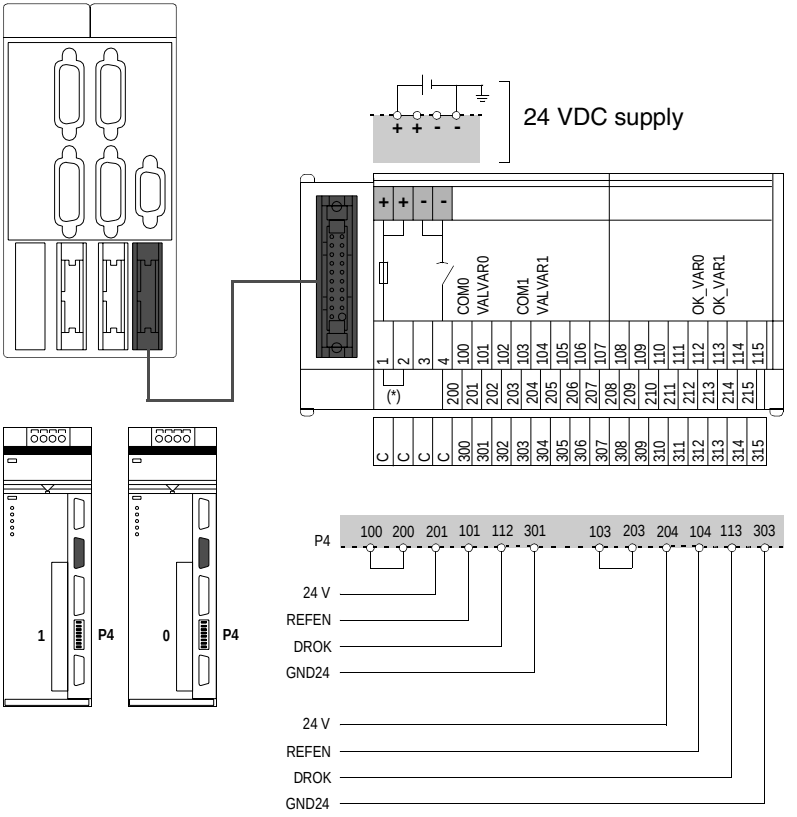

To connect directly, use the TSX CDP 301 or 501 strip (See *Connection using TSX CDP 301 or 501 strips, p. 199*).
(*) Strap between 1 and 2: terminals 200 to 215 are +24 VDC.

Correspondence between TELEFAST terminals and HE10 connector

General

This table shows the correspondence between TELEFAST terminals and the module's HE10 connector:

TELEFAST screw terminal block (Terminal No.)	HE10 20-pin connector (Pin No.)	Kind of signal	
100	1	COM0	closed contact = variable speed controller confirmation
101	2	VALR0	
102	3	nc	
103	4	COM1	
104	5	VALR1	
105	6	nv	
106	7	COM2	
107	8	VALR2	
108	9	nc	
109	10	COM3	
110	11	VALR3	
111	12	nc	
112	13	OK_VAR0	VARiable OK = voltage presence of the encoder supply
113	14	OK_VAR1	
114	15	OK_VAR2	
115	16	OK_VAR3	
+ 24 VDC	17	Auxiliary input sensor supply	
- 0 VDC	18		
+ 24 VDC	19		
- 0 VDC	20		
1		Terminals 200 to 215 at +24 VDC	
2			
3		Terminals 200 to 215 at –0 VDC	
4			
200...215		Connecting shared sensors to: ● +24 VDC if terminals 1 and 2 are connected, ● - 0 VDC if terminals 3 and 4 are connected	
300...315		On the optional ABE-7BV20 bar, the terminals that can be used as a shared sensor must be connected by a wire to the shared voltage.	

(1) nc = not connected.

7.7 Electrical characteristics of modules

At a Glance

Subject of this section

This Section introduces the different characteristics of the TSX CAY axis command modules.

What's in this Section?

This section contains the following topics:

Topic	Page
General characteristics	208
Characteristics of the analog outputs	209
Characteristics of the counting inputs	210
Characteristics of auxiliary inputs	213
Characteristics of the Q0 reflex outputs	215
Monitoring sensor/pre-sensor voltage	217
Characteristics of the variable speed controller inputs	218
Characteristics of the relay outputs	220

General characteristics

Table of characteristics

This table shows the general characteristics of TSX CAY modules:

Maximum frequency of counting: absolute SSI encoder: transmission CLK frequency incremental encoder		200 kHz 500 kHz x 1 250 kHz x 4	
Current used on internal 5 V (ventilator in operation)	**Module**	**Typical**	**Max.**
	CAY 2• CAY 4•/33	1.1 A 1.5 A	1.4 A 1.8 A
Current used on the 24V sensor/ pre-sensor, outputs OFF	CAY 2• CAY 4•/33	15 mA 30 mA	18 mA 36 mA
Current consumed by the module on the 10/30 V encoder at 24V (1)	CAY 2• CAY 4•/33	11 mA 22 mA	20 mA 40 mA
Power dissipated in the module	CAY 2• CAY 4•/33	7.2 W (2) 10 W (2)	11.5 W (3) 17 W (3)
Insulation resistance	> 10 MΩ under 500 VDC		
Dielectric rigidity with ground connection or 0 V logical PLC	1000 Veff 50/60 Hz per min		
Operating temperature	0 to 60 °C		
Storage temperature	-25 °C to 70 °C		
Hygrometry (without condensation)	5% to 95%		
Operating altitude	< 2000 m		

Note (1): absolute encoder and supply used exclusively in 24V.
Note (2): normal conditions of use: one active auxiliary input per channel (under 24V).
Note (3): "worst" case and extreme conditions: all auxiliary inputs active (under 30 V).

This module has a mini internal ventilator, which enables good working order in all temperatures. The ventilator is started up when necessary by the module's internal temperature sensor (triggered at an external temp. of 45 °C).
It is possible to use external ventilation blocks (TSX FAN••), if the conditions around the module surpass the above parameters.

Characteristics of the analog outputs

Table of characteristics

This table shows the characteristics of the analog inputs:

Parameters	Value	Units
Range	+/- 10,24	V
Real dynamic	+/- 10,24	V
Resolution	13 bits + signs	
LSB value	1,25	m V
Max. current supplied by an output	1,5	m A
fallback value	max +/- 1	LSB
Monotony	100	%
Differential linearity	+ /- 2	LSB
Accuracy	0,5	% P.E.
Dielectric rigidity between the channels and the protective ground	1000 VAC	

Each output is protected against short circuits or overloads. In case of error, a signal is sent to the CPU using a status word. A short circuit of these outputs is not harmful to the module.

There is no check for an absent connector on the analog output.

Characteristics of the counting inputs

Diagram

Example of input A:

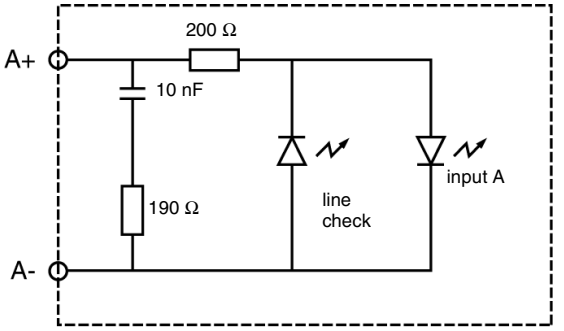

Characteristics

This table shows the characteristics of the counting inputs:

Electrical characteristics	Symbol	Value	Units
Nominal voltage	One	+/- 5	V
Voltage limit	U1	+/- 5,5	V
Nominal current	In	+/- 18	mA
Input impedance (under 5 V)	Re	270	Ohms
Voltage for "On" state	Uon	>= +2,4	V
Current at "On" state	Ion	> +3,7	mA
Voltage for "Off" state	Uoff	<1,2	V
Current at "Off" state	Ioff	<1	mA
Encoder/sensor voltage feedback check	Presence check		

Compatibility of A, B, Z inputs

RS 422 / RS 485 line transmitter outputs, 7 mA current loop Differential line monitor on each input:

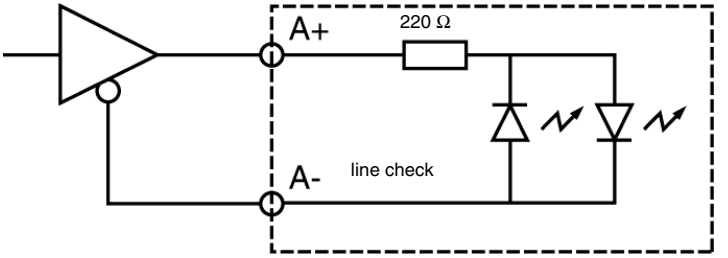

Outputs complemented by 5 V totem pole supply. Differential line monitor on each input:

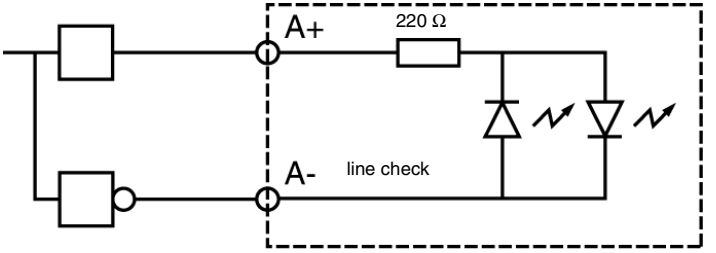

Characteristics of the return +supply encoder inputs

Illustration:

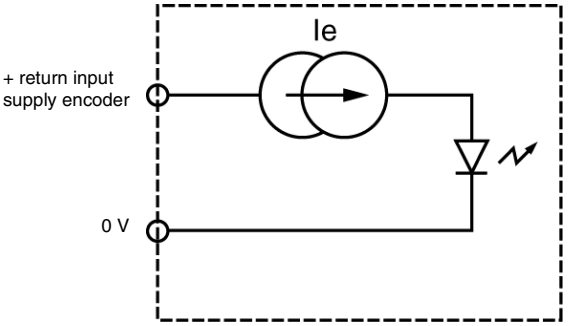

Table of characteristics:

Characteristics	Symbol	Value	Units
Voltage for ON state (OK)	Uok	> 2,5	V
Voltage limits	Umax	30	V
Input current (2.5 < Uok < 30)	Imax	3	mA

As long as the input is active, the presence of the encoder is detected.

Characteristics of auxiliary inputs

Illustration

The inputs use 24 V from a supply provided via the connector.
Diagram:

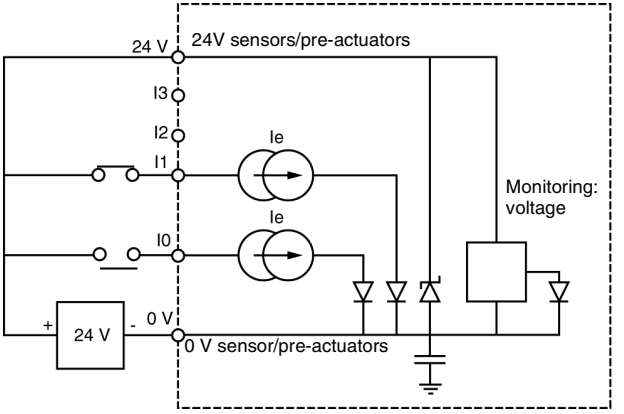

Characteristics

Table of characteristics for auxiliary inputs:

Electrical characteristics	**Symbol**	**Value**	**Unit**
Nominal voltage	Un	24	V
Voltage limits (1) (ripple included)	U1 Utime (*)	19 to 30 34	V
Nominal current	In	8	mA
Input impedance (at Unom)	Re	3	kΩ
Voltage for "On" state	Uon	>=11	V
Current at Uon (11 V)	Ion	>6	mA
Voltage for "Off" state	Uoff	<5	V
Current at "Off" state	Ioff	<2	mA
Immunity Off -->On (for I0, I2 and I3) (for I1)	ton	0.1 to 0.2 1 to 4	ms ms
EVT input (on G07)	incremental encoder: 1µs absolute encoder: ≤ 400 µs		
Dielectric rigidity with the ground connection	1500 Veff 50 / 60 Hz for 1 mn		
IEC compatibility with sensors	type 2		
2-/3-wire proximity sensor compatibility	all proximity sensors function at 24 VDC		
Type of input	current ducts		
Logic type	Positive (sink)		

(*) Utime: maximum permitted voltage for 1 hour in every 24 hours.

Characteristics of the Q0 reflex outputs

General

Each positioning channel has an output controlled by the processor and which allows the integrated command from an ordered axis function to be performed. For example, a brake command between two shifts, safety etc. This output is static, the shared load is at 0 V of the sensor/pre-sensor voltage.
The output is protected against overloads and short circuits and in case of fault, information is made available to the processor about it.

Illustration

Reflex output:

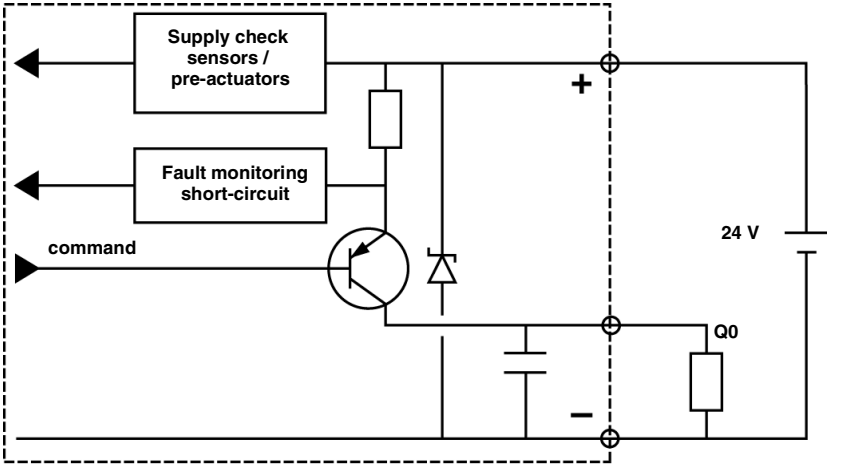

Characteristics

Table of characteristics:

Electrical characteristics	**Value**	**Units**
Nominal voltage	24	V
Voltage limits max for 1 hour in 24 hours (Utime)*	19 to 30 34	V V
Nominal current	500	mA
Max voltage fall "On"	< 1	V
Leakage current	< 0,3	mA
Max current to 30 V and to 34 V	625	mA
Communication time	< 500	µs
Dielectric rigidity with the ground connection	1500 Veff 50/60 Hz per min	
Compatibility with direct current inputs	All positive logic inputs whose input resistance is less than 15 kΩ	
IEC 1131 compatibility	Yes	
Monitoring short-circuits of each channel	One signaling bit per channel	
Reset ● via application program ● automatic	One bit per channel in write mode via program	
Protection against overloads and short-circuits	Using current limiter and thermal circuit breaker (0.7A< id < 2 A)	
Protection against overvoltage of the channels	Zener (breakdown) between outputs and +24V	
Protection against polarity inversions	Using a reverse diode on the supply	
Power of a lamp with filament	10 W (max)	

(*) Utime is the maximum voltage applicable to the module for 1 hour in a 24 hour period of operation.

Monitoring sensor/pre-sensor voltage

General

The supply for the actuators / pre-actuators is monitored by the module to signal to the processor any malfunction, which could lead to incorrect working order.
Table of characteristics:

Electrical characteristics	Symbol	Value	Units
Voltage for OK state	Uok	> 18	V
Voltage for faulty state	Udef	< 14	V
Immunity OK --> Error	Im.off	> 1	ms
Immunity error --> OK	Im.on	> 1	ms
Inclusion of error	Toff	< 10	ms
Inclusion of non-error	Ton	< 10	ms

Characteristics of the variable speed controller inputs

General

The auxiliary inputs of the variable speed controller are supplied by the same supply as the auxiliary input/outputs. This is not monitored by the module, but any loss in voltage less than 5 V on a CTRL_VAR input can signal to the processor a fault with the variable speed controller.
Illustration:

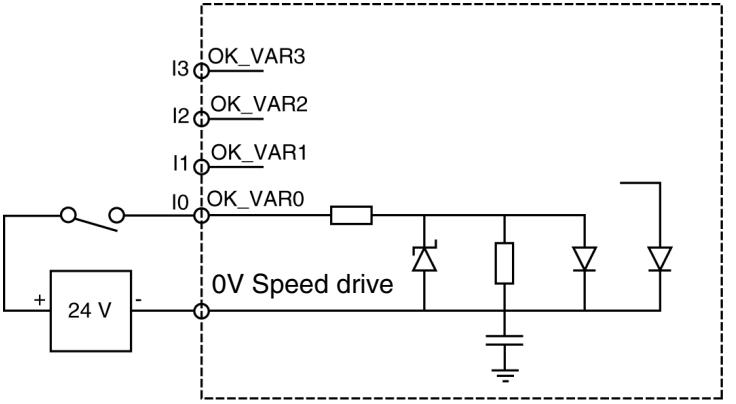

Table of characteristics

Table of electrical characteristics:

Electrical characteristics	Symbol	Value	Units
Nominal voltage	One	24	V
Voltage limits (1) (ripple included)	U1 Utime (*)	19 to 30 34	V V
Nominal current	In	8	mA
Input impedance (at Un)	Re	3	kΩ
Voltage for "OK" state	Uon	≥11	V
Current at Uon (11 V)	Ion	> 3,5	mA
Voltage for "Error" state	Uoff	< 5	V
Current at "Error" state	Ioff	< 1,5	mA
Immunity OK --> Error	toff	1 to 4	ms
Immunity at Error --> OK	ton	1 to 4	ms
Dielectric rigidity with the ground connection	1500 Veff 50/60 Hz per min		
IEC 1131 compatibility with sensors	Type 1		
Logic type	Positive (sink)		

(*) Utime: maximum permitted voltage for 1 hour in every 24 hour period.

Characteristics of the relay outputs

Illustration

Each channel has a relay output.

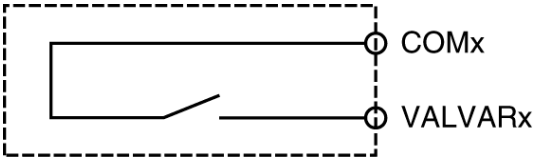

Table of characteristics

This table describes the electrical characteristics:

Electrical characteristics	Value	Units
Direct voltage used	5 to 30	V
Switched current permitted in direct 30 V on resistive load	200	mA
Minimum permitted load	1V/1mA	
Switching time	< 5	ms
Dielectric rigidity: ● between contacts and between channels ● between contacts and ground connection	300 VAC per min 1000 VAC per min	

Appendices

8

Compatibility of the absolute encoders with the TSX CAY modules

General

All absolute SSI encoders, 16 ≤ Number of data bits ≤ 25, Gray or binary code are compatible with the TSX CAY modules. For example:

- **IVO trademark**
  - GM 400 0 10 11 01
    24 Volts, Gray code, 0 header bits, 25 data bits, 0 status bits, without parity,
  - GM 401 1 30 R20 00
    24 Volts, Gray code, 0 header bits, 25 data bits, 1 status bit, with even parity.
- **Hengstler trademark**
  - RA58-M/1212
    24 Volts, Gray code, 0 header bits, 24 data bits, 1 status bit, without parity.
- **Stegmann trademark**
  - AG 661 01
    24 Volts, Gray code, 0 header bits, 25 data bits, 0 status bits, without parity.
- **IDEACOD trademark**
  - SHM506S 428R / 4096 / 8192 / 26
    11-30 Volts, Gray code, 0 header bits, 25 data bits, 0 status bits, without parity,

Step by step axis command

III

At a Glance

Subject of this part

This Part deals with the implementation of step by step axis commands.

What's in this Part?

This part contains the following chapters:

Chapter	Chapter Name	Page
9	Introduction to step by step axis command	225
10	Installation	231
11	Appendix	265

Introduction to step by step axis command

9

At a Glance

Subject of this chapter

This Chapter introduces the step by step axis command.

What's in this Chapter?

This chapter contains the following topics:

Topic	Page
General	226
Physical description	228
Standard functions	229

General

Step by step axis command offer

The TSX CFY 11/21 step by step axis command for Premium PLCs is offered to satisfy the demands of the machine manufacturers.
It is designed for machines, which require a step by step movement command by a motor linked with a sequential command by a programmable PLC.
Illustration:

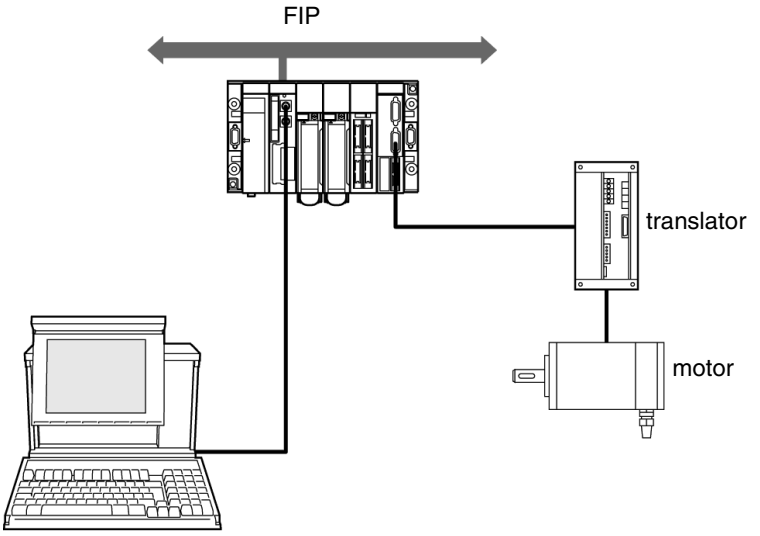

At a Glance

Two modules are available:

- **TSX CFY 11** module: an axis with a command output with one translator,
- **TSX CFY 21** module: two axes with two command outputs with two translators.

Illustration:

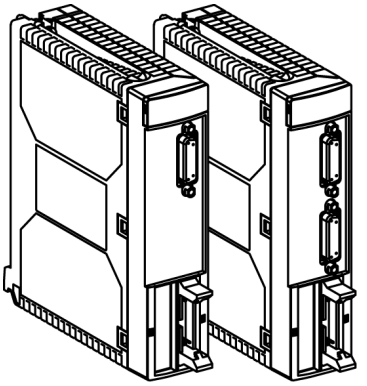

Physical description

Description of step-by-step axis command modules.

TSX CFY 11 module:

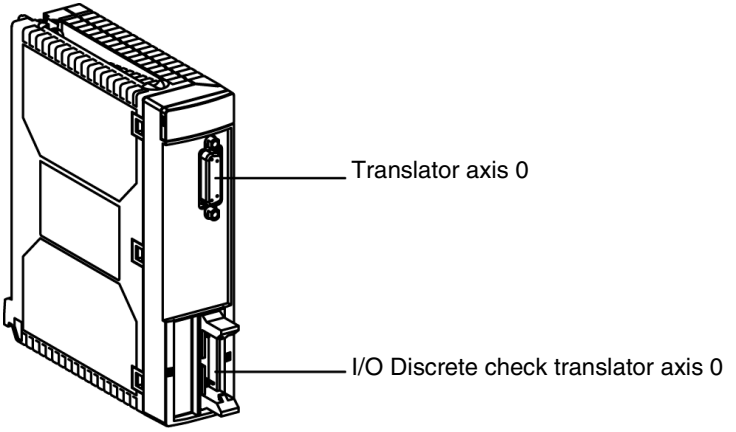

TSX CFY 21:

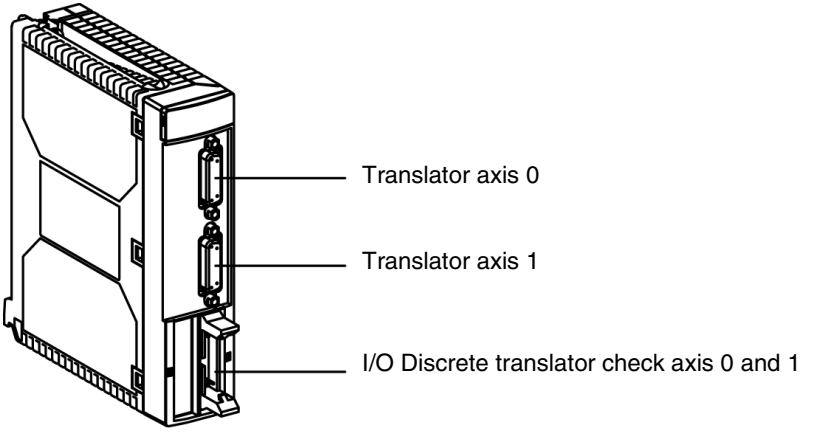

Standard functions

Illustration

Summary of step-by-step axis command module:

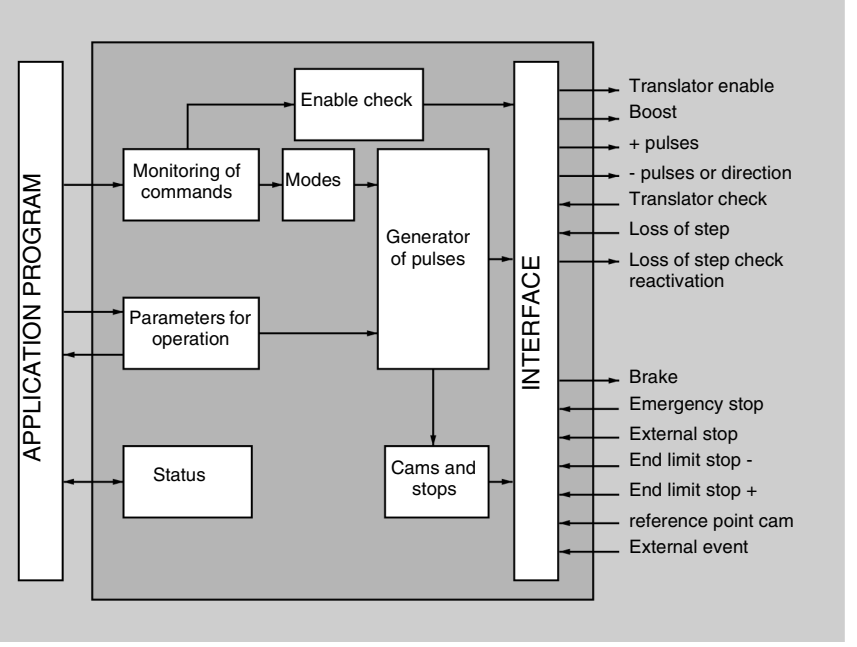

Features of TSX CFY 11/21 step-by-step axis command modules

Each axis of TSX CFM 11/21 axis command modules has:

- inputs
  - a translator check input,
  - an control input for loss of step,
  - a + end limit input,
  - a - end limit input,
  - a reference point cam input,
  - an event input,
  - an emergency stop input,
  - an external stop input,
- outputs
  - brake output,
  - pulse+ output,
  - pulse - output or direction,
  - loss of step control reactivation output,
  - boost output,
  - translator enable output.

Installation

10

At a Glance

Subject of this chapter

This Chapter deals with the installation of step-by-step axis command modules.

What's in this Chapter?

This chapter contains the following sections:

Section	Topic	Page
10.1	General	233
10.2	Connection of translator signals	237
10.3	Connecting sensors/pre-actuators and supply modules	242
10.4	Electrical characteristics of modules	256

10.1 General

At a Glance

Subject of this section

This Section introduces general points for installing TSX CFY modules.

What's in this Section?

This section contains the following topics:

Topic	Page
Necessary basic configuration	234
Installation procedure	235
General precautions for wiring	236

Necessary basic configuration

Introduction

Step-by-step axis command modules can be installed in any slot of a TSX RKY•• rack. The rack power supply must be chosen according to the number of modules installed.

Maximum number of TSX CFY • 1 modules per station

Each step-by-step command module supports:
- 1 application-specific channel for TSX CFY 11 module,
- 2 application-specific channels for TSX CFY 21 module.

Since the maximum number of application-specific channels managed by a PLC station depends of the type of processor installed, the maximum number of TSX CFY •1 modules in a PLC station will therefore depend on:
- the type of processor installed,
- the number of application-specific channels already used other than step-by-step command application-specific channels.

You should therefore make a global report at PLC station level to find out the number of application-specific channels already in use and thus define the number of TSX CFY •1 modules which can be used.

Reminder of number of application-specific channels managed by each type of processor:

Processors	Number of "application-specific" channels managed
TSX P57 103	8
TSX P57 153	8
TSX P57 203 / PCX 57 203 / TSX P57 2•23	24
TSX P 57 253	24
TSX P 57 2623 / TSX P 57 2823	24
TSX P 57 303	32
TSX P57 353 / PCX 57 353 / TSX P57 3623	32
TSX P57 453 / TSX P57 4823	48

Installation procedure

General

The module can be installed or removed without cutting the rack power supply, to ensure that a device is available.



CAUTION

Connection and disconnection of connectors

It is not recommended that you connect or disconnect the connectors with the translator power supplies, as some translators cannot cope with this action. The auxiliary input/output connector can be disconnected while switched on without damaging the module. However, for safety reasons it is recommended that you turn off the auxiliary power supply before any type of disconnection.

Failure to follow this precaution can result in injury or equipment damage.

The module fixing screws and connectors must be correctly screwed in place in order to guarantee effective resistance to electrostatic and electromagnetic interference.

General precautions for wiring

General

The power supply to sensors and actuators must be protected against overload or overvoltage by fast-blow fuses.

- when wiring use wires of sufficient size to avoid on-line voltage falls and overheating,
- keep sensor and actuator cables away from any source of radiation resulting from high-power electric circuit switching,
- all cables connecting the translators must be shielded, the shielding must be good quality and connected to the protective ground both for the module and the translator. Continuity must be ensured throughout connections. Do not transmit any other signals in the cable than those for the translators.

For reasons of performance the auxiliary inputs of the module have a short response time. You must therefore make sure that there is enough self-sufficient supply to these inputs to ensure the module continues to operate correctly in the event of a short power break. It is recommended that you use a regulated supply to ensure more reliable response times from the actuators and sensors. The 0 V supply must be connected to the protective ground nearest to the supply module output.

10.2 Connection of translator signals

At a Glance

Subject of this section

This Section deals with the connection of translator signals.

What's in this Section?

This section contains the following topics:

Topic	Page
Signal labeling	238
Connection to a translator with RS 422/485 interface	240
Connecting to a translator with NPN open collector interface	241

Signal labeling

Diagram of the principle

This diagram illustrates the principles for labeling:

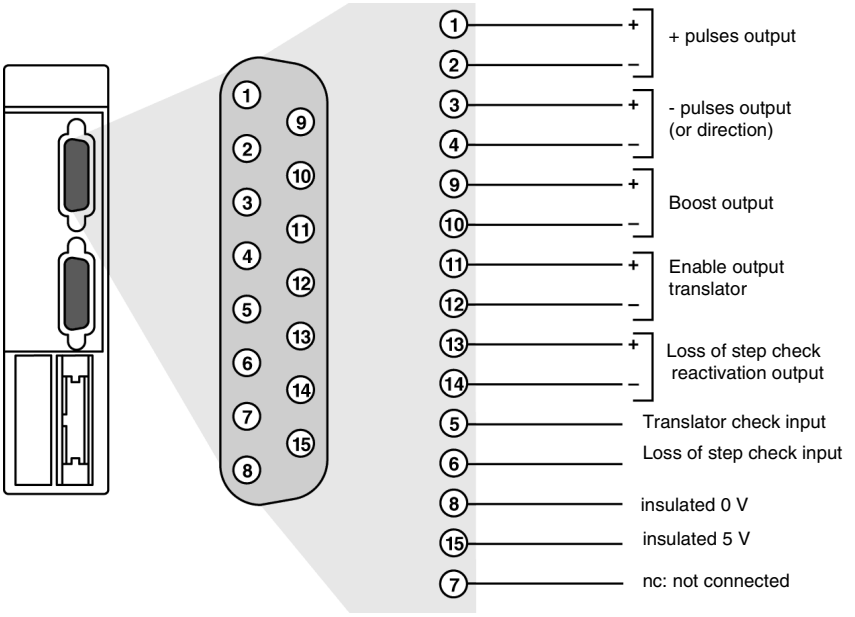

Description

Each module output signal is RS 485, for each output there is therefore a direct signal (+) and its complement (-). The outputs are TTL type current extraction compatible. The 5 V insulated voltage is only available, if necessary, to supply translator input and output. The 0 V is common to inputs and outputs. 5 V must only be used with translators with open collector outputs and TTL type inputs (5 V insulated not provided by the translator).
Illustration:

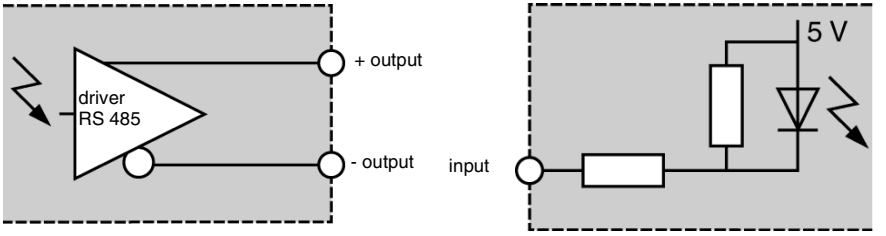

The proposed type of connection is direct wiring by soldering onto the connector: the TSX CAP S15 (See *Overview of the TSX TAP S15•• wiring accessories, p. 134*) kit comprising a SUB-D connector and its protective cover.

Connection to a translator with RS 422/485 interface

Diagram of the principle

It is recommended that you use a shielded cable containing 7 twisted pairs.
The + and – wires of each module output signal must be connected in the same pair.
This diagram illustrates the principle of connection:

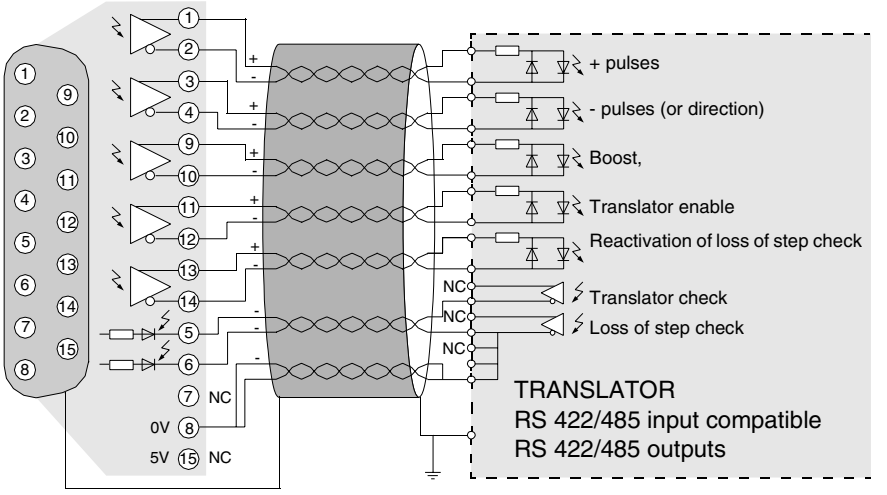

Connecting to a translator with NPN open collector interface

Diagram of the principle

Only one wire is used per input/output signal. If the translator does not provide 5 V insulated voltage do not forget to supply the interface from the insulated 5 V provided by the module.
This diagram illustrates the principle of connection:

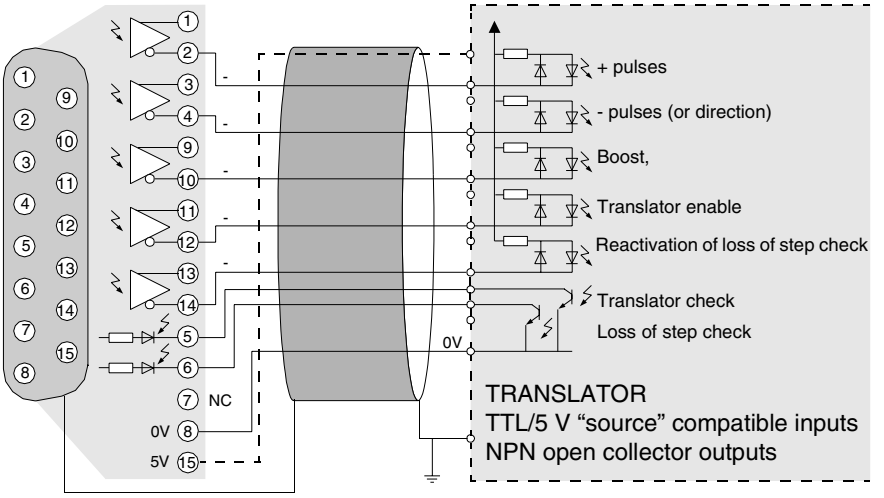

10.3 Connecting sensors/pre-actuators and supply modules

At a Glance

Subject of this section

This Section deals with the connection of sensors/pre-actuators and supply modules.

What's in this Section?

This section contains the following topics:

Topic	Page
Signal labeling	243
Connections	244
Connecting auxiliary inputs and outputs to processor.	245
Principle of connecting I/O channel 0	246
Connection using a TSX CDP 301/501 pre-wired strand	248
Connection with TELEFAST pre-wiring system	250
Availability of signals on TELEFAST	251
Correspondence between TELEFAST terminals and HE10 connector	252
Wiring precautions	253

Signal labeling

Diagram of the principle

This diagram illustrates the principles for labeling signals:

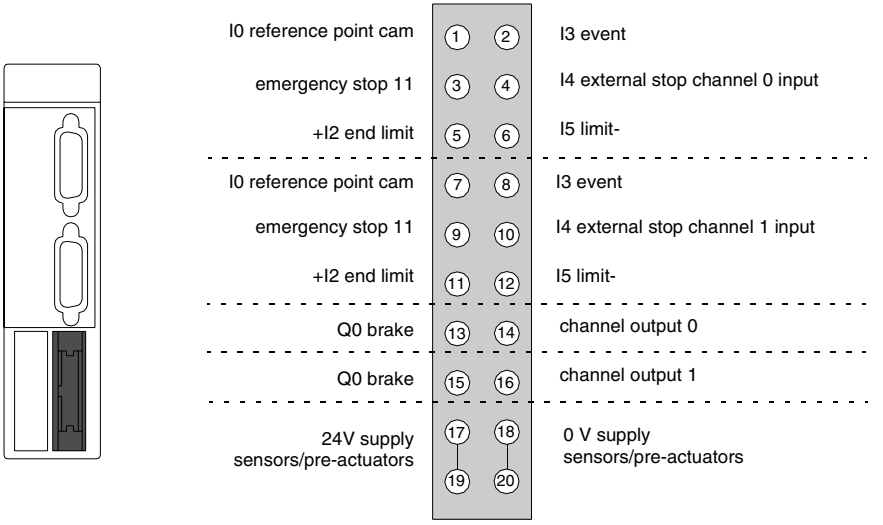

The 0 V of sensors/pre-actuators is connected in the module to the protective ground by an R/C network with the value: R = 100MΩ / C = 4.7 nF.

Connections

General

There are several possible options for connecting the sensors/pre-actuators of the TSX CFY 11 / 21 module. They can be connected directly by the TSX CDP 301 / 501 (See *Connection using TSX CDP 301 or 501 strips, p. 199*) strip or via the Discrete TELEFAST pre-wiring system.

Connecting auxiliary inputs and outputs to processor.

General

To ensure optimum operation, the event and reference point inputs have a weak immunity. It is recommended that you use contacts without bounce (proximity sensor for example).

Principle of connecting I/O channel 0

Diagram of the principle

This diagram illustrates the principles for connecting I/I channel 0:

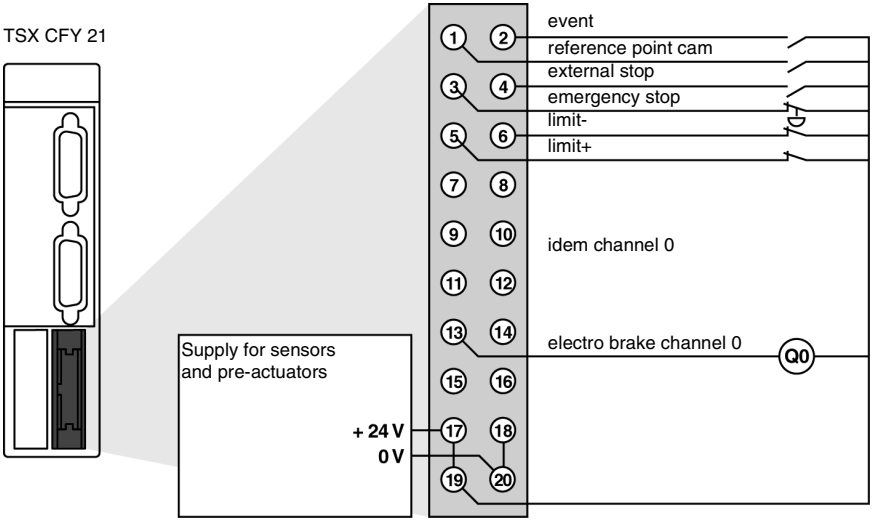

Description

The emergency stop or end limit switch contacts are open.
End limit switch contacts are not contacts which have to be wired in series with the emergency input. End limit switch contacts are used to command movement stop with deceleration. The end limit switch (ELS+) stops movement in the +direction, the end limit switch (ELS-) stops movement in the- direction. It is therefore important to positions them at the correct end of the axis (see diagram below).
Illustration:

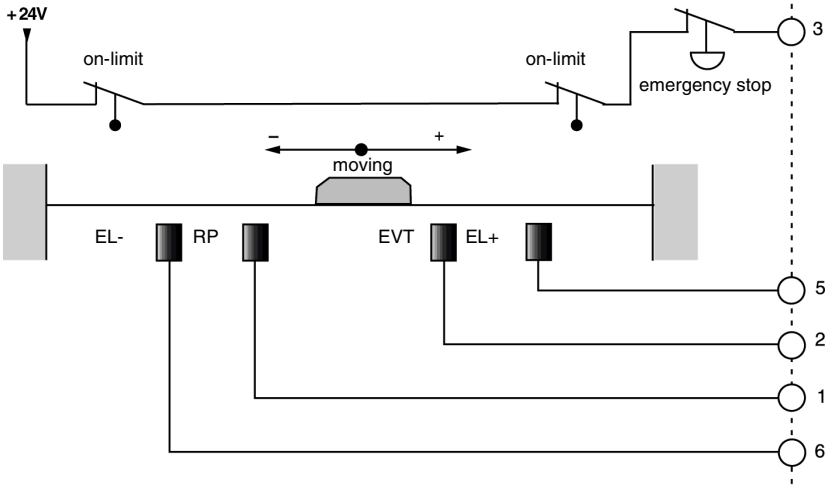

Connection using a TSX CDP 301/501 pre-wired strand

General

Connection using a pre-wired strand enables direct contact to the actuators, pre-actuators or any terminal system. This strand comprises 20 gage 22 wires (0.34 mm^2) with a connector at one end and free wires at the other end, labeled using a color code.

Illustration

This diagram shows the color code:

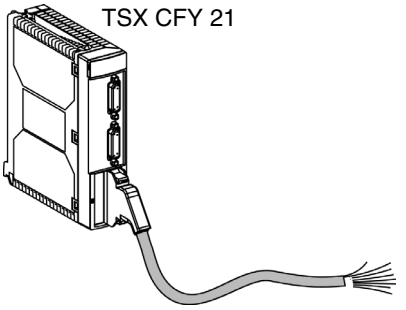

cable:	length:
TSX CDP 301	(3 m)
TSX CDP 501	(5 m)

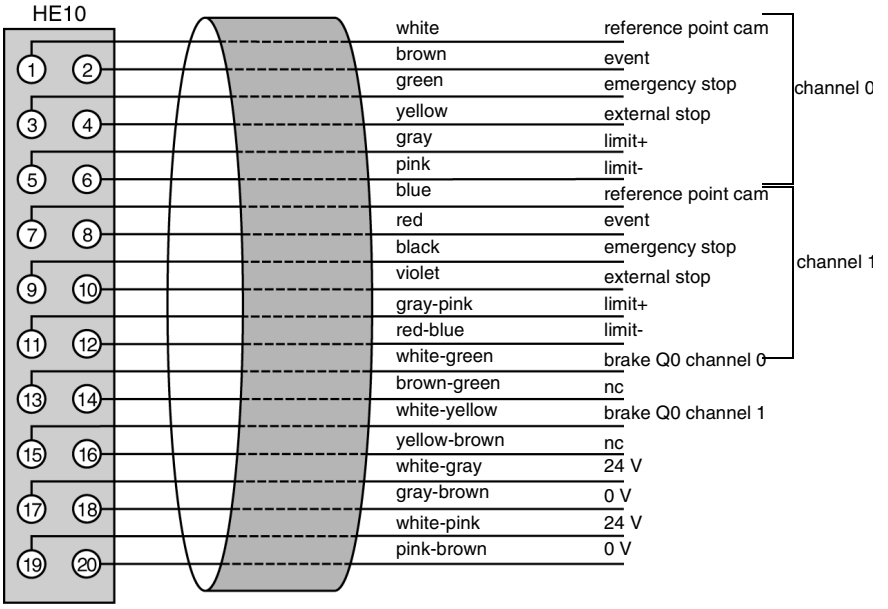

Connection with TELEFAST pre-wiring system

Diagram of the principle

This connection is made using a TELEFAST 2 base: ABE-7H16R20.

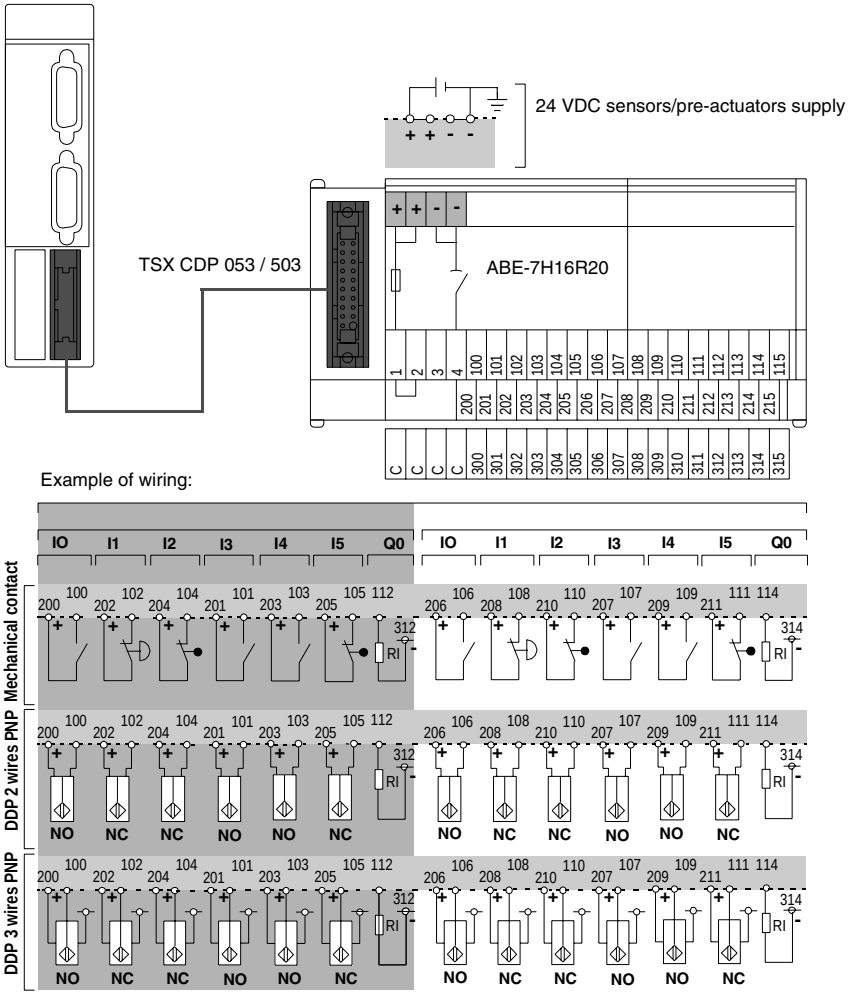

NO: normally open,
NC: normally conductor.

Availability of signals on TELEFAST

Illustration

This diagram shows the availability of signals on TELEFAST:

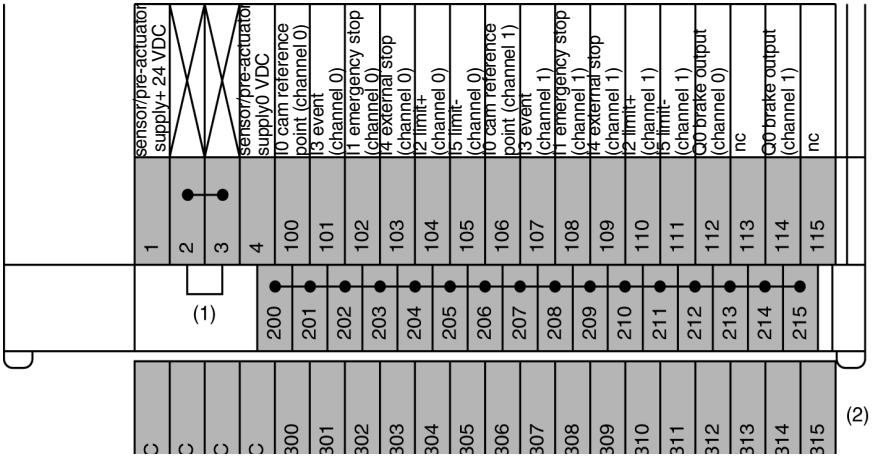

(1) At the ABE-7H16R20 base, the position of the jumper wire determines the polarity of all terminals from 200 to 215:

- jumper wire in position 1 or 2: terminals 200 to 215 have + polarity,
- jumper wire in position 3 or 4: terminals 200 to 215 have - polarity,

(2) At the ABE-7H16R20 base, it is possible to add an optional ABE-7BV20 strip to create a second shared sensor (+ or - according to user's choice).

Correspondence between TELEFAST terminals and HE10 connector

General

This table shows the correspondence between TELEFAST terminals and the module's HE10 connector:

TELEFAST screw terminal block (Terminal No.)	HE10 20-pin connector (Pin No.)	Nature of signal	
100	1	I0 cam reference point	channel 0
101	2	I3 event	
102	3	I1 emergency stop	
103	4	I4 external stop	
104	5	I2 limit	
105	6	I5 limit	
106	7	I0 cam reference point	channel 1
107	8	I3 event	
108	9	I1 emergency stop	
109	10	I4 external stop	
110	11	I2 limit+	
111	12	I5 limit-	
112	13	Q0 brake output	channel 0
113	14	nc	
114	15	Q0 brake output	channel 1
115	16	nc (1)	
+ 24 VDC	17	Auxiliary input sensor supply	
- 0 VDC	18		
+ 24 VDC	19		
- 0 VDC	20		
1		Terminals 200 to 215 at +24 VDC	
2			
3		Terminals 200 to 215 at –0 VDC	
4			
200...215		Connecting shared sensors to: ● +24 VDC if terminals 1 and 2 are connected, ● - 0 VDC if terminals 3 and 4 are connected	
300...315		On the optional ABE-7BV20 bar, the terminals that can be used as a shared sensor must be connected by a wire to the shared voltage.	

(1) nc = not connected

For a TSX CFY 11 module, the signals corresponding to the channel are not connected.

Wiring precautions

General

To ensure the best performance, inputs I0 to I5 are rapid inputs. If the actuator is a dry contact, the inputs must be connected by a twisted pair, or by a shielded cable if the sensor is a two or three-wire proximity detector.
The module includes as standard basic protection against short circuits or voltage inversions. However, the module cannot remain operational for long with an error. You must therefore ensure that the fuses in series with the supply carry out their protective function. These are 1A maximum fast-blow fuses, the supply energy must be sufficient to ensure their fusion.

Important note: wiring of Q0 static outputs

The actuator connected to the Q0 brake output has its shared pin connected to supply 0 V. If for any reason there is a 0 V outage of the output amplifier supply (e.g. poor contact or accidental unplugging), when the 0 V of the actuators remains connected to the 0 V supply, there may be enough mA output current from the amplifier to keep low-power actuators triggered.
Illustration:

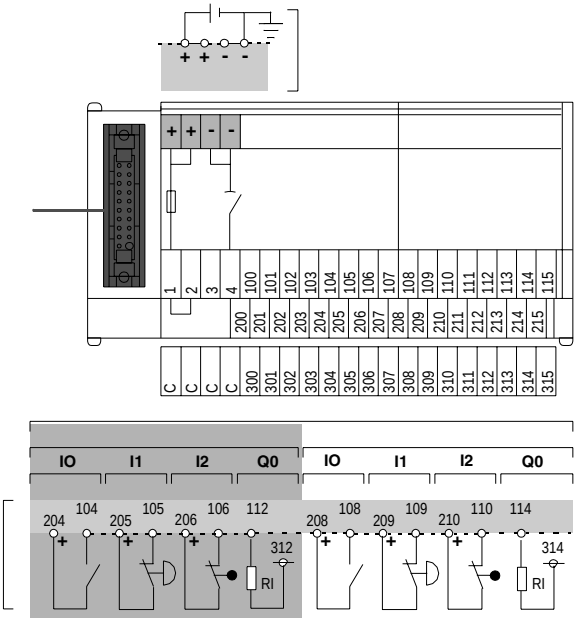

Connection via TELEFAST

This kind of connection is the most guaranteed, on the condition that the shared actuators are connected to the 200 to 215 shared points strip (jumper wire in position 1-2). In this case there can be no outage of the shared module without an outage of the shared actuators.

Connection using a TSX CDP 301 / 501 pre-wired strand

This kind of connection must be carried out with the greatest care and attention. It is recommended that you take special care in wiring this cable, for example using the cable ferules on screw terminals. It may be necessary to double the connections in order to ensure permanent contacts. When the actuator supply is a long distance away from the modules and close to the shared actuators, there may be an accidental break of the link between the latter and the 0 V terminal of the module(s).
Illustration:

TSX CFY 11/21

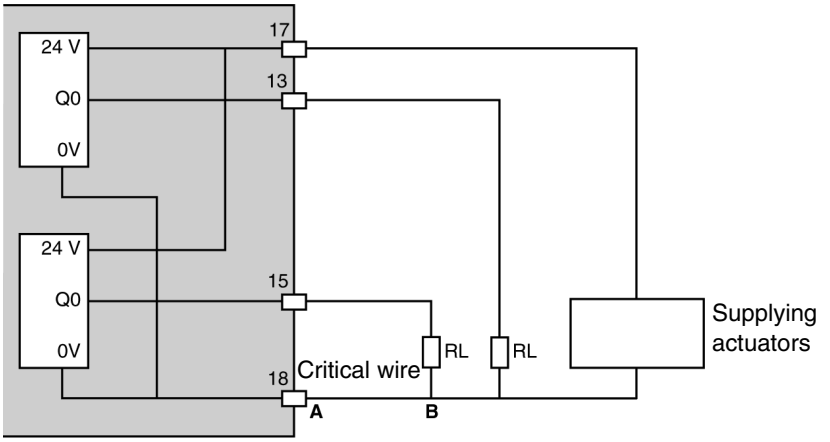

If there is a break of the supply section between A and B, there is a risk that the RL actuators may not remain operational. You must, if possible, double connections of 0 V supply to the modules.
Connection using a TSX CDP 301 / 501 pre-wired strand:

TSX CFY 11/21

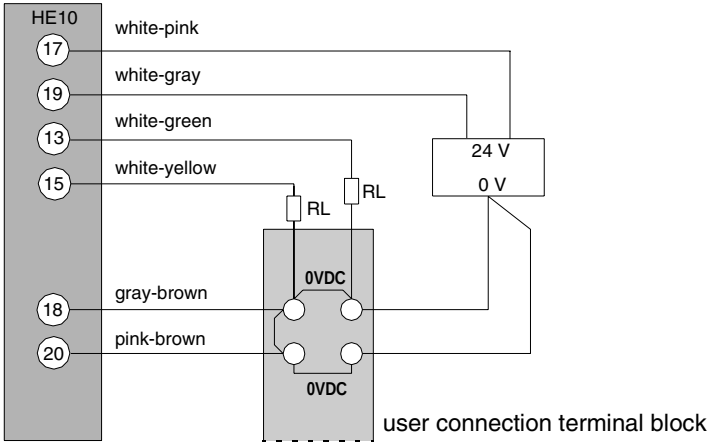

10.4 Electrical characteristics of modules

At a Glance

Subject of this section

This Section introduces the different electrical characteristics of TSX CFY modules.

What's in this Section?

This section contains the following topics:

Topic	Page
General characteristics	257
Characteristics of translator inputs (SUB-D connector)	258
Characteristics of translator outputs (SUB-D connector)	259
Characteristics of auxiliary inputs (HE10 connector)	260
Characteristics of Q0 brake output	262

General characteristics

Table of characteristics

This table introduces the general characteristics of TSX CFY modules:

Maximum frequency of pulses		187.316 KHz
Current consumed on internal 5 V	**Module**	**Value**
	TSX CFY 11 TSX CFY 21	510 mA 650 mA
Current consumed by the module on sensor/pre-actuator 24V with no sensor/ pre-actuator current	TSX CFY 11 TSX CFY 21	50 mA 100 mA
Power dissipated in the module	TSX CFY 11 TSX CFY 21	3.8 W 5.6 W
Insulation resistance	> 10 MΩ under 500 VDC	
Dielectric rigidity between I/O "translator" and protective ground or PLC logic	1000 Veff 50 / 60 Hz for 1 mn	
Operating temperature	0 to 60 °C	
Storage temperature	-25 °C to 70 °C	
Hygrometry (without condensation)	5% to 95%	
Operating altitude	< 2000 m	

Characteristics of translator inputs (SUB-D connector)

Diagram

These inputs have positive logic current extraction:

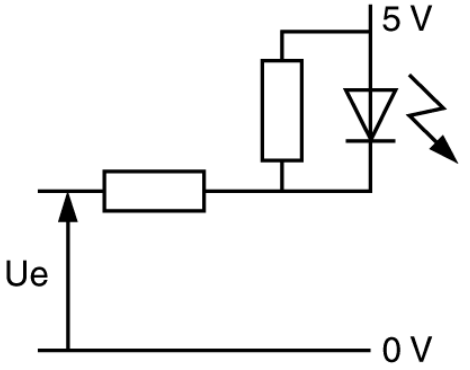

Characteristics

The following table shows the characteristics of translator inputs:

Characteristics	Symbol	Value	Unit
Nominal current (Ue = 0 V)	Ie	4,5	mA
Voltage for ON state	Uon	2	V
Voltage for OFF state	Uoff	3,6	V
Immunity of loss of step input		15 to 30	µs
Immunity of translator error input		3 to 10	ms

Characteristics of translator outputs (SUB-D connector)

Table of characteristics

These outputs are insulated RS 422/485. There are two complemented outputs per signal.

Characteristics	Values	Units
Differential voltage output on R load ≤ 100Ω	+/- 2	V
Short-circuit current	< 150	mA
Permitted shared mode voltage	≤ 7	V
Permitted differential voltage	≤ 12	V

Characteristics of auxiliary inputs (HE10 connector)

Illustration

Diagram:

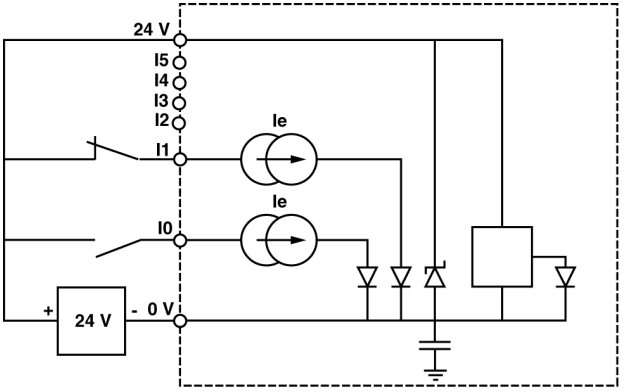

Characteristics Table of characteristics for auxiliary inputs:

Electrical characteristics		**Symbol**	**Value**	**Unit**
Nominal voltage		Un	24	V
Nominal voltage limits (ripple included)		U1 Utime (1)	19 to 30 34	V
Nominal current		In	7	mA
Input impedance (at Unom)		Re	3,4	kΩ
Voltage for "On" state		Uon	≥11	V
Current at Uon (11 V)		Ion	>6	mA
Voltage for "Off" state		Uoff	<5	V
Current at "Off" state		Ioff	<2	mA
Input immunity: **Cam reference point input and event** **Other inputs**		 ton/toff (2) ton/toff	 < 250 3 to 10	 µs ms
IEC 1131 compatibility with sensors		type 2		
Compatibility with 2 and 3-wire sensors		all proximity sensors supplied at 24 VDC		
Type of input		current ducts		
Logic type		Positive (sink)		
Pre-actuator voltage check	supply threshold OK		> 18	V
	supply threshold error		< 14	V
Time of supply detection	supply OK		< 30	ms
	supply error		> 1	ms

(1) Utime: maximum permitted voltage for 1 hour in every 24 hours.
(2) Inputs: reference point cam and events are fast inputs (response time < 250 µs) compliant with maximum frequency of 187.316 KHz of translator command outputs.

Characteristics of Q0 brake output

Illustration

Brake output:

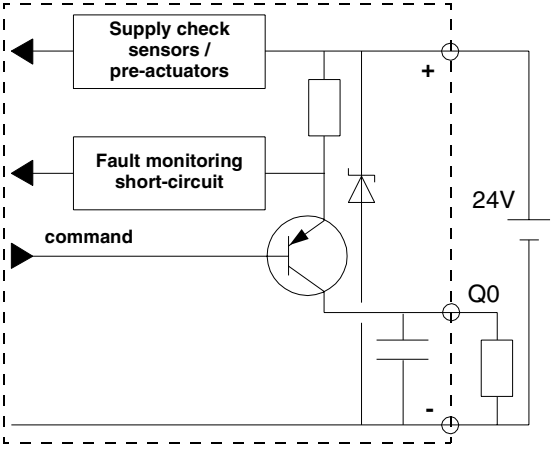

Characteristics Table of characteristics:

Electrical characteristics	Value	Unit
Nominal voltage	24	V
Voltage limits Temporary voltage	19 to 30 34 (1)	V V
Nominal current	500	mA
Max voltage fall "On"	< 1	V
Leakage current at "OFF" state	< 0,3	mA
Load impedance	80<Zon<1500	Ω
Max current to 30 V and to 34 V	625	mA
Communication time	< 250	µs
Electro unload time	< L/R	s
Max switching frequency (on inductive load)	F<0.6 / (LI^2)	Hz
Compatibility with inductive inputs	Any input whose Re is less than 15 kΩ and has positive logic	
IEC 1131 compatibility	Yes	
Protection from overloads and short-circuits	by current limiter and circuit breaker	
Monitoring short-circuits of each channel	thermal, signaling: 1 bit per channel	
Reset ● via application program ● automatic	One bit per module	
Protection against channel overvoltage	Zener (55 V) between outputs and +24 V	
Protection against polarity inversions	Using a reverse diode on the supply	
Power of a filament lamp	8	W
Pre-actuator voltage check	OK if supply > 18 (ascending) not OK if supply < 14 (decreasing)	V V
Reaction time of voltage check	NOK --> OK<30 OK --> NOK>1	ms ms

(1) maximum permitted voltage for 1 hour in every 24 hours of operation.

Appendix

11

At a Glance

Subject of this chapter

This Chapter is an appendix which deals with the compatibility of translators with TSX CFY modules, and with the installation of these modules with Phytron translator.

What's in this Chapter?

This chapter contains the following topics:

Topic	Page
Translators compatible with TSX CFY 11/21	266
Connection of Phytron translators with TSX CFY 11/21 modules	267

Translators compatible with TSX CFY 11/21

Phytron Translator

Reference table:

Manufacturers	References
Phytron Elektronik	MSD MINI 172/140 (17 A: 140 V) MSD MINI 172/70 (17 A: 70 V) SP MINI 92/70 (9 A: 70 V) SP MINI 72/70 (7 A: 70 V) SP MINI 52/70 (5 A: 70 V)

Other translators

Reference table:

Manufacturers	References
Others	All RS 422 / RS 485 translators: ● RS 422 / RS 485 differential inputs or TTL/5 V "source" compatible inputs, ● RS 422 / RS 485 differential outputs or NPN open collector outputs.

Connection of Phytron translators with TSX CFY 11/21 modules

Connection diagrams

The TSX CXP 611 cable is designed to facilitate connection between TSX CFY 11/21 modules and Phytron Elektronik range translators, MSD MINI series and SP MINI:

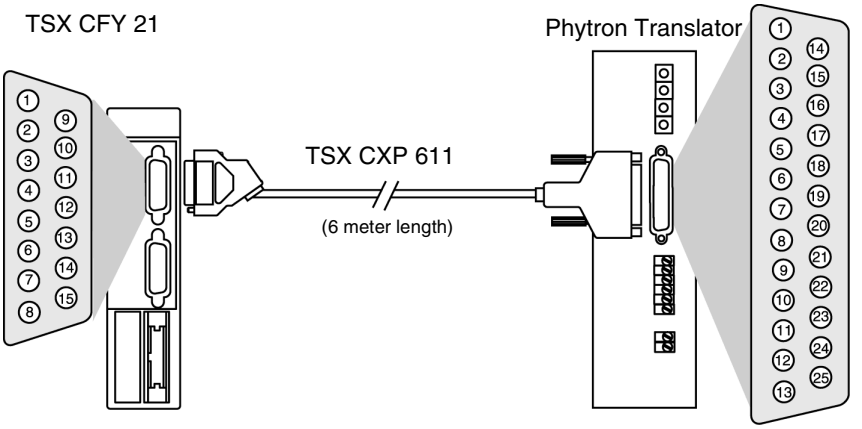

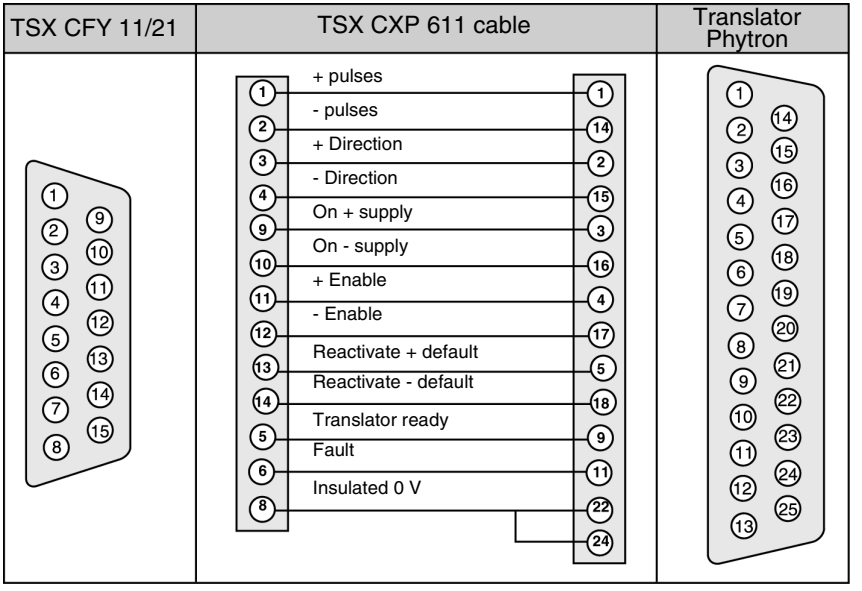

TSX CCY 1128 Cam module

IV

At a Glance

Subject of this part

This Part deals with the TSX CCY 1128 Cam module.

What's in this Part?

This part contains the following chapters:

Chapter	Chapter Name	Page
12	Introduction to the TSX CCY 1128 electronic cam module	271
13	General instructions for installing the TSX CCY 1128 module	277
14	Connecting an incremental and absolute SSI encoder to the TSX CCY 1128	287
15	Connecting the auxiliary inputs and track outputs of the TSX CCY 1128	309
16	TSX CCY 1128 module displays	329
17	TSX CCY 1128 module electrical characteristics	333
18	Connecting an absolute encoder with parallel outputs to TSX CCY 1128	339

Introduction to the TSX CCY 1128 electronic cam module

12

At a Glance

Subject of this chapter

This Chapter introduces the TSX CCY 1128 electronic cam module

What's in this Chapter?

This chapter contains the following topics:

Topic	Page
Introduction to the TSX CCY 1128 in its environment	272
Physical introduction of the TSX CCY 1128	273
Electronic cam function of the TSX CCY 1128	275
TSX CCY 1128 compatibility with the installed base	276

Introduction to the TSX CCY 1128 in its environment

Introduction

The TSX CCY 1128 module is a standard application-specific module in the Premium range, which integrates with the TSX RKY •• rack of a TSX/PMX/PCX 57 PLC station. It executes the "electronic cam" function for a rotational, alternative, cyclic or endless axis, managed by an incremental or absolute type encoder.

Operating principle

The module manages up to 128 cams independently, which can be distributed to a maximum of 32 tracks to which up to 24 physical and 8 logical outputs can be assigned. When the PLC processor has transmitted the configuration and calibration information, the module, independently of the PLC cycle, processes the cam program and controls the track outputs. The module's various functions are described in the application-specific "electronic cam" manual – Reference 35001381.

Installation diagram

The diagram below represents a basic configuration of an installation

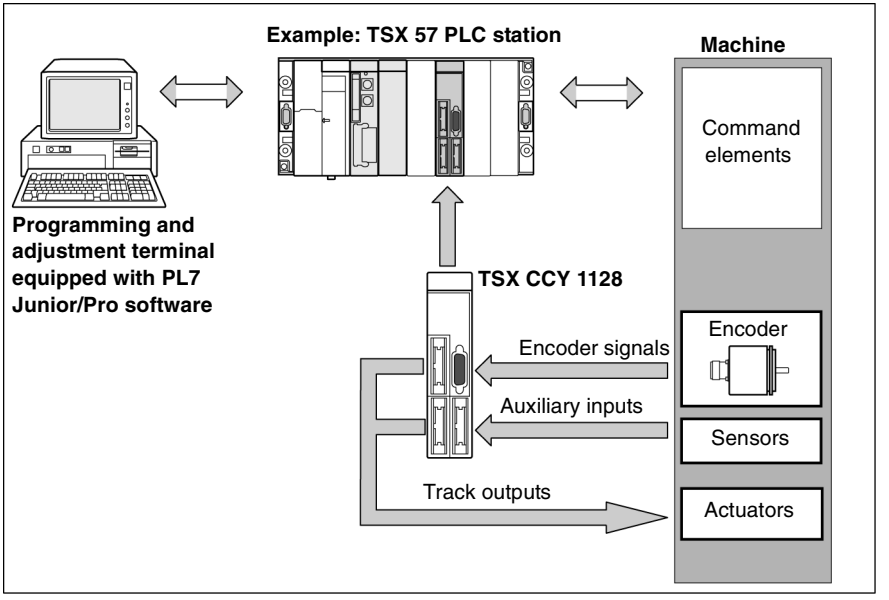

Physical introduction of the TSX CCY 1128

Introduction

The input and output interface connectors for the machine are located on the front panel of the module. The connector for the X bus is situated on the back. All of the processor's data and command signals travel via this bus.

Appearance of the module

The diagram below represents the TSX CCY 1128 module and its various elements

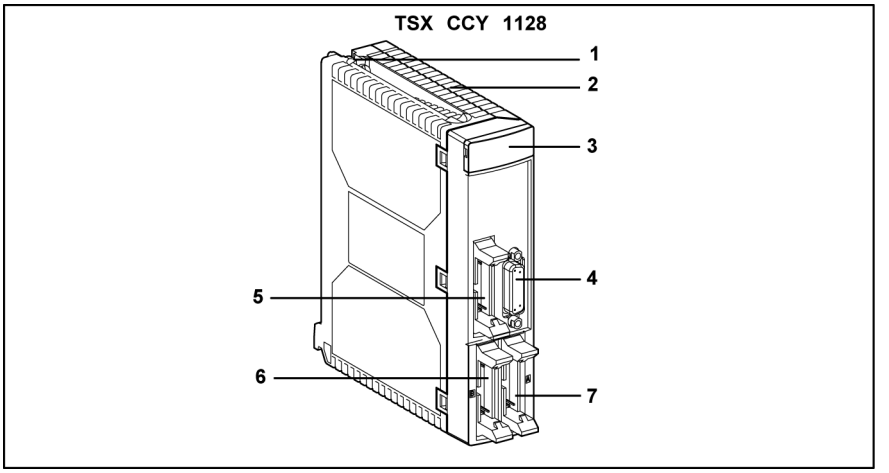

Elements and their function

Number	Elements	Functions
1	Screw	Ensures that the module is properly fixed to the TSX RKY •• rack
2	Module casing	Ensures the following functions: • support and protection of the electronic boards, • locking of the module in its slot, • support of the connectors.
3	Display block comprising 4 LEDs: • green LED RUN • red LED ERR • red LED I/O • green LED CH0	Displays state and errors of the module as well as the channel diagnostics. Indicates the operating mode of the module, Indicates an internal module error, Indicates an external module error or an application fault, Allows channel diagnostics. (The various states of the LEDs and their meanings are described in Chapter 6).
4	15 pin SUB D connector	Allows connection to the encoder.
5	HE 10 connector	Allows connection to group 0 and 1 track outputs
6	HE 10 connector	Allows connection to group 2 and 3 track outputs
7	HE 10 connector	Allows connection to auxiliary inputs and encoder supply.

Electronic cam function of the TSX CCY 1128

Introduction

The electronic cam function controls the module's outputs according to the position of the encoder installed on the machine. Several encoder types can be used:

- incremental encoder with RS 422/ RS 485 line transmitter outputs,
- incremental encoder with Totem Pole outputs,
- absolute SSI encoder with series outputs,
- absolute encoder with parallel outputs. The use of this encoder requires a TELEFAST ABE-7CPA11 interface, which converts parallel output signals into series output signals.

Illustration

The diagram below represents the various types of encoder, which can be connected to the module.

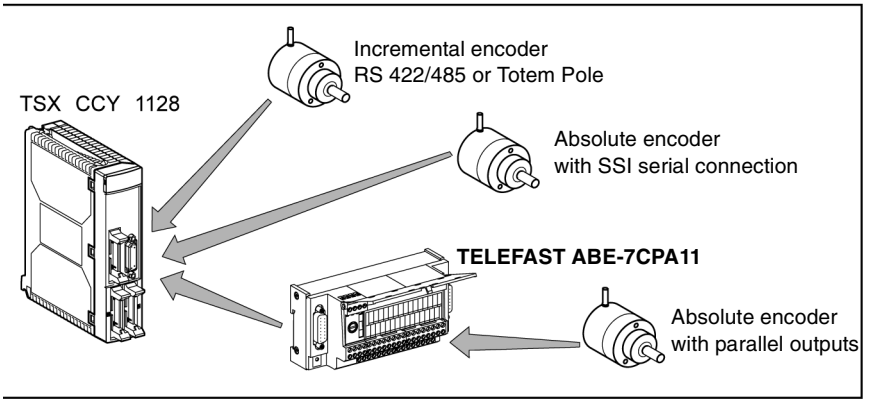

TSX CCY 1128 compatibility with the installed base

Hardware compatibility	In order to receive the TSX CCY 1128 module, the PLC station must have a processor of software version SV 3.3 or above at its disposal.
Software compatibility	To develop an application that uses the TSX CCY 1128, the PL7 Junior/Pro software must be of version SV 3.4 or above

General instructions for installing the TSX CCY 1128 module

13

At a Glance

Subject of this chapter

This Chapter describes the general instructions for installing the TSX CCY 1128 electronic cam module.

What's in this Chapter?

This chapter contains the following topics:

Topic	Page
Installing the TSX CCY 1128 in a PLC station rack	278
Installing the TSX CCY 1128 in a PLC station	279
Number of application-specific channels managed by one PLC station	281
Installation precautions for the TSX CCY 1128	282
General wiring instructions	283
Selecting and protecting auxiliary power supplies	284
Choice of encoders for the TSX CCY 1128	285

Installing the TSX CCY 1128 in a PLC station rack

Introduction

The TSX CCY 1128 module can be installed into all the available slots of the TSX RKY •• rack of a TSX 57/PMX 57/PCX 57 PLC station, with the exception of the slots taken up by the supply and processing modules.

Illustration

The diagrams below show the procedure for installing a module from the Premium range onto the TSX RKY •• rack.

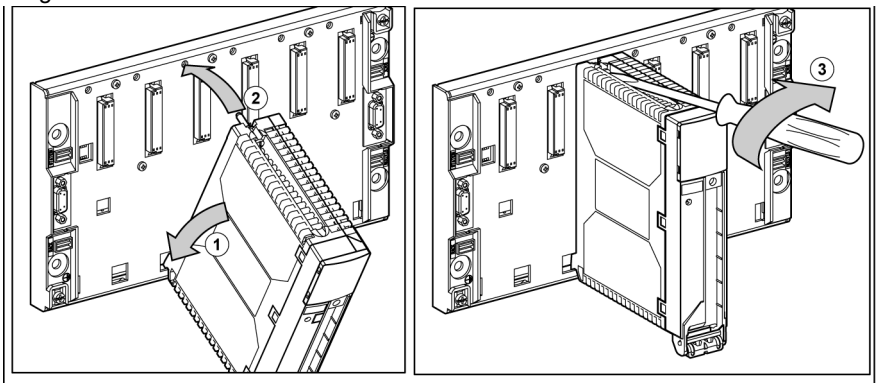

Procedure

The table below describes the procedure:

Step	Action
1	Insert the pins at the back of the module into the centering holes located on the lower part of the rack.
2	Twist the module to bring it into contact with the support.
3	Fix the module onto the rack using the screw located on the upper part of the module. Maximum screw tightening: 2.0 N. m

Installing the TSX CCY 1128 in a PLC station

Introduction

The TSX CCY 1128 module can be installed onto all PLC station racks:

- TSX RKY•• extendable racks located on the main segment of bus X, (the segment on which the rack supporting the processor is installed).
- TSX RKY•• extendable racks located on the remote segments of bus X.

Installation onto a rack belonging to the main segment of bus X

The diagram below represents the installation of the module onto a rack belonging to the main segment of bus X. The module can be installed onto the rack supporting the processor and onto all other racks present on bus X. The distance between the rack supporting the module and the rack supporting the processor must not exceed 100 meters.

Installing the module

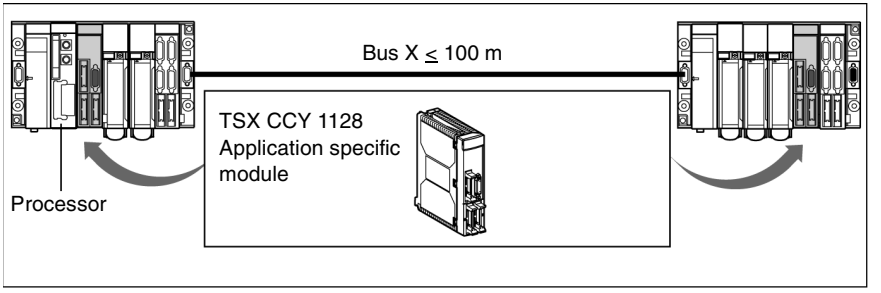

Installing onto a rack belonging to a remote segment of bus X

The diagram below represents the installation of the module onto a rack belonging to the remote segments of bus X. The distance between the rack supporting the module and the rack supporting the processor must, under no circumstances, exceed 225 meters.

Installing the module

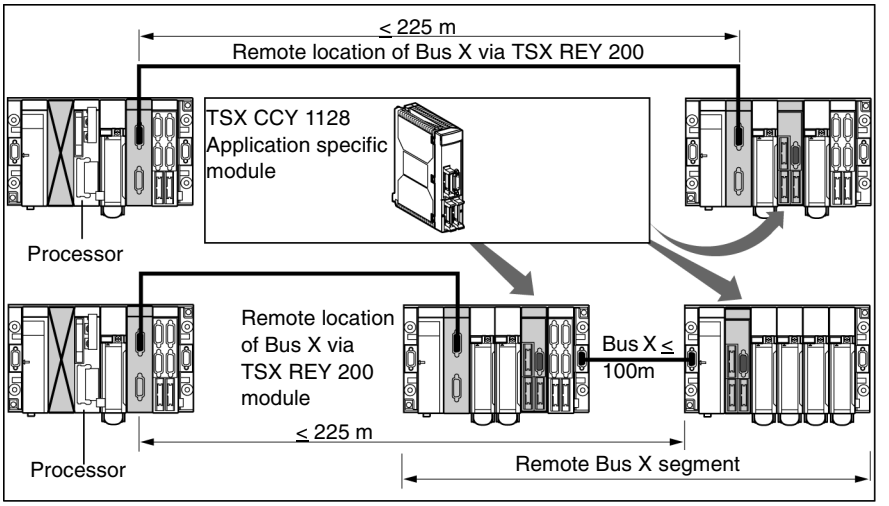

Number of application-specific channels managed by one PLC station

Definition of an application-specific channel

An application-specific module (TSX CTY• counting modules, TSX CAY• axis command modules, TSX CFY• step by step command modules, TSX YSP Y• weighing modules, TSX CCY 1128 electronic cam modules, etc.) uses a number of channels, varying from 1 to n according to the module type; these channels are called application-specific channels.

Reasons for counting the number of application-specific channels of a station

To determine:
- the power of the processor to be installed
- the maximum number of application-specific modules that can be installed in the station.

Number of application-specific channels managed by each type of processor

The table below shows the number of channels managed by each type of processor:

Type of processor	Number of application-specific channels managed
TSX P57 102 / TPMX P57 102 / TPCX 57 1012	8
TSX P57 202 / TPMX P57 202	24
TSX P57 252	24
TSX P57 302	32
TSX P57 352 / TPMX P57 352 / TPCX 57 3512	32
TSX P57 402	48
TSX P57 452 / TPMX P57 452	48

Number of application-specific channels for a TSX CCY 1128 module

A TSX CCY 1128 module has one application-specific module at its disposal.

Installation precautions for the TSX CCY 1128

Installation

In order to guarantee good working order, it is necessary to take certain precautions during its installation and removal, when plugging and unplugging the connectors on the front panel of the module, and when adjusting its fixing screws and the SUB D 15-pin connector.

Installing and removing the module

The module can be installed or removed without cutting the supply to the rack. The design of the module allows this action to be carried out with the power on in order to ensure the availability of the device.

Plugging and unplugging the connectors on the front panel of the module

It is not recommended that you plug in or unplug the connectors located at the front panel of the module when the sensor/pre-sensor supply is switched on.
Reasons:

- the encoders will not tolerate a simultaneous start-up or outage of the signals and supplies.
- The track outputs can become damaged if they are in state 1 and connected to an inductive supply

Adjusting the screws and locking the HE10 connectors in place

In order to ensure good electrical contact between the devices and by doing so create effective resistance to electrostatic and electromagnetic interference:

- the fixing screws on the module and the SUB D 15-pin connector must be correctly screwed in.
  - tightening on the module's fixing screw: 2.0 N.m
  - tightening on the SUB D 15-pin connector's fixing screw: 0.5 N.m
- The HE10 connectors must be correctly locked.

General wiring instructions

Introduction	In order to guarantee that the automatism operates correctly, it is necessary to respect some basic rules.
Section of wires used	Must be of sufficient size to avoid on-line voltage falls and overheating.
Cable path.	The encoder connector cables, the other sensors and the pre-actuators must be kept away from any source of radiation resulting from high-power electric circuit switches and which could cause malfunctions.
Encoder signal connector cables	The module/encoder connector cables must adhere to the following rules: ● They must be shielded using a high quality shielding, ● they must only carry related signals to the encoder, ● the cable shielding must be linked to the protective ground connection both at the module and the encoder, ● the grounding must be continuous throughout the connection.

Selecting and protecting auxiliary power supplies

Introduction

Encoders, sensors and pre-actuators associated with the module require auxiliary power supplies (5VDC and/or 24VDC).

Type of power supply

Only use regulated power supplies to:
- ensure optimum reliable response time for sensors and pre-actuators,
- increase the reliability of devices by minimum heating of module I/O circuits.

These power supplies must be independent enough (> 10ms) to override micro-power outages and ensure the module continues to run effectively.

Protecting power supplies

The power supplies for encoders, other sensors and pre-actuators MUST be protected from overloads and short-circuits by appropriately calibered fast-blow fuses.

Connection of the 0V supply to the protective ground:

The 0V supply must be connected to the protective ground nearest to the supply module output.

General rules for installing the encoder power supply module

- this must be used only for supplying the encoder,
- it must be independent enough to override micro-power outages (> 10ms).
- it must be placed as close as possible to the TSX CCY 1128 module to reduce circuit capacities to the maximum.

Choice of encoders for the TSX CCY 1128

Introduction

The TSX CCY 1128 module inputs are able to receive signals from the following encoders:

- incremental,
- absolute with SSI serial outputs,
- absolute with parallel outputs. This last type requires the use of a specific interface TELEFAST ABE-7CPA11.

The user can choose from these encoder types according to the requirements.

Encoder output interface

The table below summarizes the main characteristics of the output interface for the encoder types normally used.

Type of encoder	Supply voltage	Output voltage	Types of interface
Incremental	5 VDC	5 VDC differential	Outputs with line transmitters to RS 422 standard, with 2 outputs per signal A+/A-, B+/B-, Z+/Z-
	10...30 VDC	10...30 VDC	Totem Pole outputs with one output per signal A, B, Z
Absolute with SSI outputs	10...30 VDC	5 VDC differential	Output with line transmitters to RS 422 standard for the data signal (Data SSI) RS 422 compatible input for the clock signal (CLK SSI).
Absolute with parallel outputs	5 VDC or 10...30 VDC	5 VDC or 10...30 VDC	Parallel outputs. Require the use of the Telefast ABE-7CPA11 interface to transform parallel output signals into serial signals.

Encoder supply

The design of the module allows an encoder supply of:

- 5 VDC
- 24 VDC, standardized voltage in the 10…30 VDC format.

The choice of supply voltage is dependent on the encoder supply voltage.

5 VDC encoder supply

For encoders with a 5 VDC supply, voltage falls must be taken into account. These are dependent upon:

- the length of the cable between the module and the encoder (double length),
- the section of wire,
- the encoder consumption.

The acceptable voltage fall for the encoder is generally 10% of the nominal voltage. The table below gives the on-line voltage fall, according to the section of the wire, for a 100 meter length of wire with a given encoder consumption.

Section of wire	**Voltage fall for a 100 meter length of wire with an encoder consumption of:**			
	50 mA	**100 mA**	**150 mA**	**200 mA**
0.22 mm = gauge 24	0.4 V	-	-	-
0.34 mm = gauge 22	0.25 V	0.5 V	-	-
0.5 mm	0.17 V	0.34 V	0.51 V	-
1 mm	0.09 V	0.17 V	0.24 V	0.34 V



CAUTION

Recommendation for a 5 VDC encoder supply voltage

It is dangerous to raise the supply voltage of the encoder to compensate for an on-line voltage fall. After a break in the supply, there is a risk of an overvoltage at the module inputs.

Failure to follow this precaution can result in injury or equipment damage.

24 VDC encoder supply

Encoders with a supply voltage of 24 VDC are recommended for the following reasons:

- the supply source does not need to be completely accurate. As a general rule, these encoders use a supply format of 10…30 V.
- an on-line voltage fall is of little significance due to a substantial distance between the module and the encoder.

Ground connection continuity

In order to ensure correct operation during interference, it is vital:

- to choose an encoder with a metal casing that is referenced to the protective ground of the connected device.
- that the ground connection is continuous between:
  - the encoder,
  - the shielding of the connector cable,
  - the module.

Connecting an incremental and absolute SSI encoder to the TSX CCY 1128

14

At a Glance

Subject of this chapter

This Chapter describes the procedure for connecting an incremental and absolute SSI encoder to the TSX CCY 1128 electronic cam module.

What's in this Chapter?

This chapter contains the following topics:

Topic	Page
Principles for connecting an encoder to a TSX CCY 1128	288
Connecting an incremental encoder with RS422 outputs to the TSX CCY 1128	289
Connecting an incremental encoder with Totem Pole outputs to the TSX CCY 1128	292
Connecting an absolute SSI encoder to the TSX CCY 1128	295
Connecting an encoder supply monitor to the TSX CCY 1128	298
Connecting the encoder supply to the TSX CCY 1128	300
TSX CAP S15 connection accessory	303
TSX TAP S1505/S1524 and TSX CCP S15• connection accessories	304

Principles for connecting an encoder to a TSX CCY 1128

Connection interfaces

The 15-pin SUB D connector, located on the front panel of the module, allows the connection of encoder and module. This connector carries:

- all signals travelling to or from the encoder,
- the encoder supply source, which is also connected:
  - either by a TELEFAST ABE-7H16R20 cable interface.
  - or directly, using a TSX CDP •01 prewired strand

The design of the module allows the encoder to be connected at either 5VDC or 10…30VDC.

Illustration

The diagram below shows the principles for connecting an encoder to a TSX CCY 1128 module.

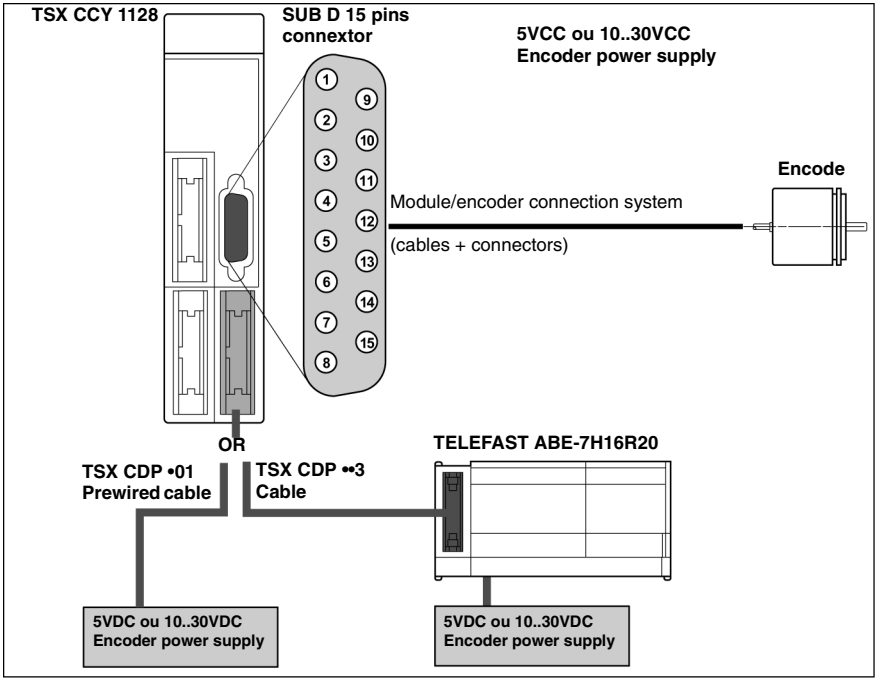

Connecting an incremental encoder with RS422 outputs to the TSX CCY 1128

Pinouts of the module's 15-pin SUB D connector

The pinout configuration of the module's 15-pin SUB D connector, for connection to an incremental encoder with RS 422 outputs, are as follows:

Diagram (front view)	Pin No.	Signal	Designation
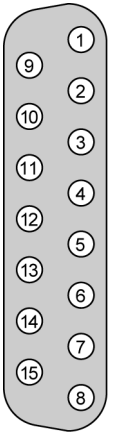	1	A+ 5V	Encoder input, pulse A+ (5VDC)
	2	A-	Encoder input, pulse A-
	3	-	-
	4	Z+ 5V	Encoder input, zero latch pulse Z+ (5VDC)
	5	Z-	Encoder input, zero latch pulse Z-
	6	-	-
	7	10…30 V	Encoder supply output (+ 10…30VDC)
	8	0 V	Encoder supply output (- 0VDC)
	9	-	-
	10	B+	Encoder input, pulse B+ (5VDC)
	11	B-	Encoder input, pulse B-
	12	-	-
	13	EPSR	Positive encoder supply feedback input. Receives positive supply feedback from the encoder, which allows the module to verify the encoder's presence.
	14	-	-
	15	5 V	Encoder supply output (+ 5VDC)

Diagram showing the A, B and Z encoder inputs of the module

The diagram below shows an A, B or Z encoder input used with an incremental encoder equipped with:

- a high-level output with a line transmitter,
- a 5VDC output voltage to the RS 422 standard.

Note: Note: each A, B and Z input uses a differential line monitor.

Diagram of input A

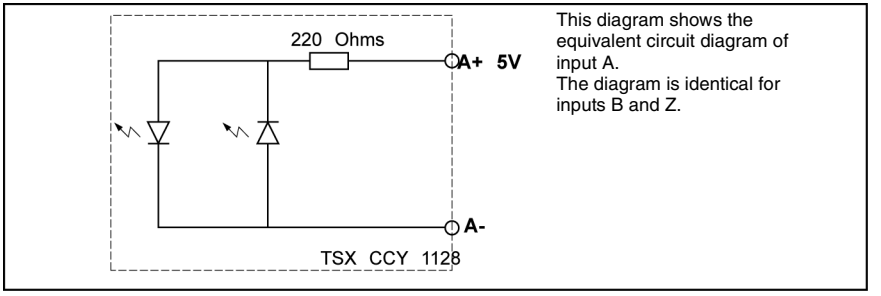

Connection process diagram

The diagram below describes the process of connecting a TSX CCY 1128 module to an incremental encoder with RS 422 outputs and a 5VDC supply.

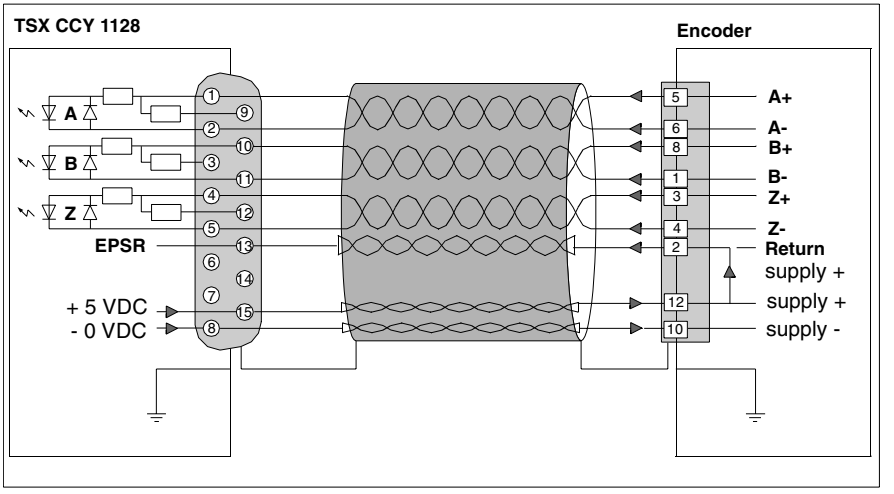

Recommendations

When connecting, adhere to the following recommendations:

- Connect each signal encoder A+/A-, B+/B-, Z+/Z-, using a twisted pair.
- Connect each supply point using a twisted pair, in order to reduce the on-line voltage falls.
- Connect both terminals of the cable shielding to the protective ground.

	**CAUTION**
	Recommendations on the pinout configuration of the encoder inputs/outputs Before connecting the encoder to the module, check the pinout configuration given by the encoder's manufacturer. **Failure to follow this precaution can result in injury or equipment damage.**

Connecting an incremental encoder with Totem Pole outputs to the TSX CCY 1128

Pinout configuration of the module's 15-pin SUB D connector

The pinout configuration of the module's 15-pin SUB D connector, for connection to an incremental encoder with Totem Pole outputs, is as follows:

Diagram (front view)	Pin No.	Signal	Designation
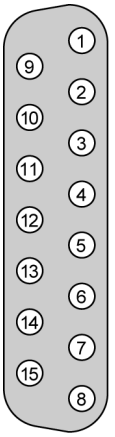	1	-	-
	2	A-	Input to be connected to 0V encoder
	3	B+ 24V	Encoder input, pulse B+ (10…30VDC)
	4	-	-
	5	Z-	Input to be connected to 0V encoder
	6	-	-
	7	10…30 V	Encoder supply output (+ 10…30VDC)
	8	0 V	Encoder supply output (- 0VDC)
	9	A+ 24V	Encoder input, pulse A+ (10…30VDC)
	10	-	-
	11	B-	Input to be connected to 0V encoder
	12	Z+ 24V	Encoder input, zero latch pulse Z+ (10…30VDC)
	13	EPSR	Positive encoder supply feedback input. Receives positive supply feedback from the encoder, which allows the module to verify the encoder's presence.
	14	-	-
	15	5 V	Encoder supply output (+ 5VDC)

Diagram showing the A, B and Z encoder inputs of the module

The diagram below shows an A, B or Z encoder input used with an incremental encoder equipped with:

- a Totem Pole type high-level output,
- an output voltage of 10…30VDC.

Note:

- differential assembly is not possible, the negative polarity of each input (A-, B- and Z-), must be linked to the 0V encoder and the positive inputs (A+, B+ and Z+) to encoder outputs A+, B+ and Z+.
- No line monitoring.

Diagram of input A

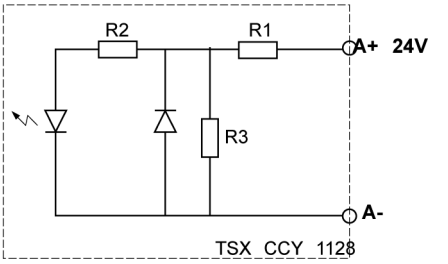

This diagram shows the equivalent circuit diagram of input A.
The diagram is identical for inputs B and Z.

Connection process diagram for the encoder

The diagram below describes the process of connecting an incremental encoder with Totem Pole outputs, with a 10...30VDC supply.

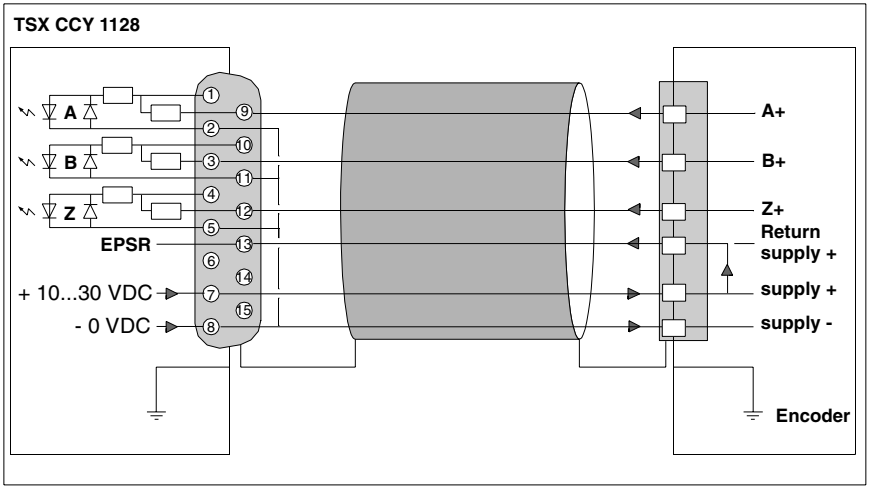

Recommendations

- connect the positive encoder supply to pin 7 of the module's 15-pin SUB D connector,
- connect the module's EPSR input to the positive supply if the encoder does not have a positive supply feedback output.
- connect both terminals of the cable shielding to the protective ground.

	**CAUTION** **Recommendations on the pinout configuration of the encoder inputs/outputs** Before connecting the encoder to the module, check the pinout configuration given by the encoder's manufacturer. **Failure to follow this precaution can result in injury or equipment damage.**

Connecting an absolute SSI encoder to the TSX CCY 1128

Pinout configuration of the module's 15-pin SUB D connector

The pinout configuration of the module's 15-pin SUB D connector, for connection to an absolute SSI encoder, is as follows:

Diagram (front view)	Pin No.	Signal	Designation
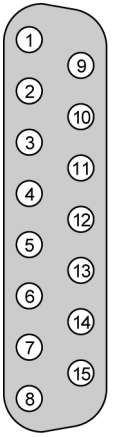	1	positive SSI data	Encoder input, positive SSI data (5VDC)
	2	negative SSI data	Encoder input, negative SSI data
	3	-	-
	4	-	-
	5	-	-
	6	CLK +	Encoder output, positive SSI CLK (5VDC)
	7	10…30 V	Encoder supply output (+ 10…30VDC)
	8	0 V	Encoder supply output (- 0VDC)
	9	-	-
	10	-	-
	11	-	-
	12	-	-
	13	EPSR	Positive encoder supply feedback input. Receives positive supply feedback from the encoder, which allows the module to verify the encoder's presence.
	14	CLK -	Encoder output, negative SSI CLK
	15	5 V	Encoder supply output (+ 5VDC)

Diagram of the module's SSI Data encoder input

The diagram below shows the SSI Data encoder input used with an absolute SSI encoder equipped with:

- a high-level output with a line transmitter,
- a 5VDC output voltage to the RS 422/RS 485 standard.

Note: The SSI Data input uses a differential line monitor.

Diagram of input A

This diagram shows the equivalent circuit diagram of input A.
The diagram is identical for inputs B and Z.

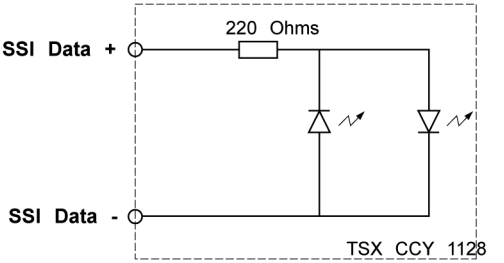

Diagram showing the process for connecting an absolute SSI encoder

The diagram below describes the process for connecting an absolute SSI encoder with a serial link, a 10…30VDC supply and outputs with standard RS 422 line transmitters.

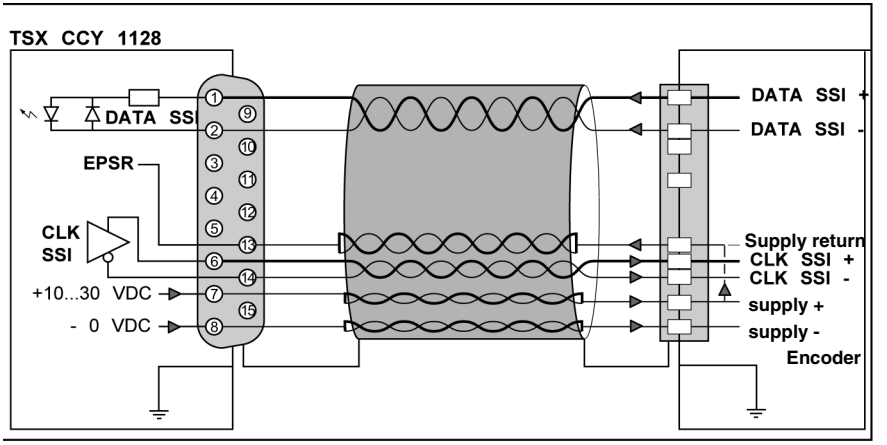

Recommendations

- Connect each DATA SSI+/SATA SSI- encoder signal using a twisted pair,
- Connect each supply point using a twisted pair, in order to reduce the on-line voltage falls
- Connect both terminals of the cable shielding to the protective ground.
- If the encoder does not have a positive supply feedback output, connect the module's EPSR input to the positive supply of the encoder.



CAUTION

Recommendations on the pinout configuration of the encoder inputs/outputs

Before connecting the encoder to the module, check the pinout configuration given by the encoder's manufacturer.

Failure to follow this precaution can result in injury or equipment damage.

Connecting an encoder supply monitor to the TSX CCY 1128

Principle

The EPSR input signal from the encoder is comparable to:

- either a fixed internally generated voltage of 3.3V if the Vref input is not connected.
- or a voltage equal to 66% of the voltage recorded at the Vref input, positive polarity of the encoder supply voltage.

Diagram of the encoder return supply monitor

The diagram below is of the encoder supply feedback monitor.

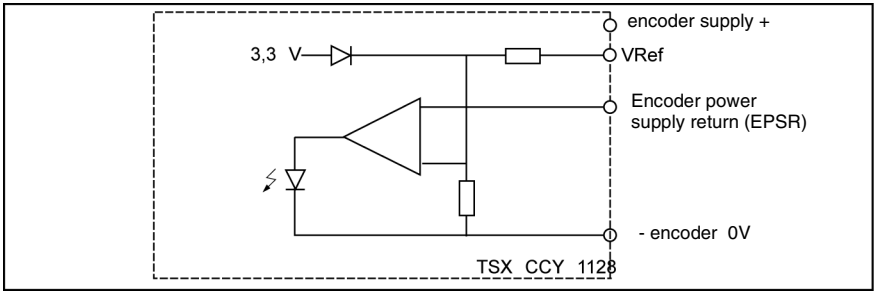

Using the VRef input

The table below summarizes the use of the Vref input according to the encoder supply voltage.

If	Then
The encoder is using a 5V supply	The Vref input is not connected to the positive encoder supply. The EPSR signal is comparable to the internal voltage of 3.3V. OK if > 3.3V
The encoder is using a 10…30V supply	The Vref input is connected to the positive encoder supply. The ESPR signal is comparable to 66% of the encoder supply voltage. OK if >66%

Diagram showing the connection process for an encoder on a 10…30V supply

The diagram below shows the connection process for the encoder supply feedback monitor if the encoder is using a 10…30 V supply.

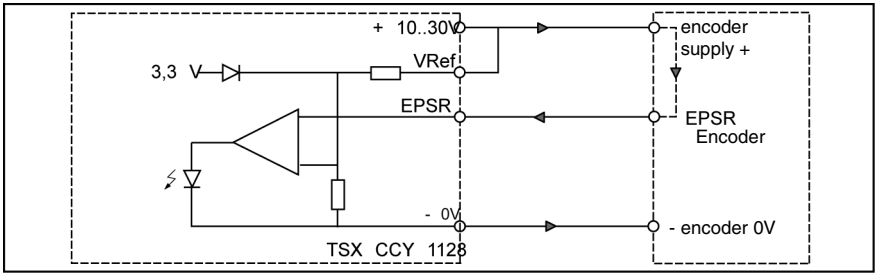

Diagram showing the connection process for an encoder on a 5V supply

The diagram below gives the process for connecting the encoder supply feedback monitor if the encoder is using a 5V supply.

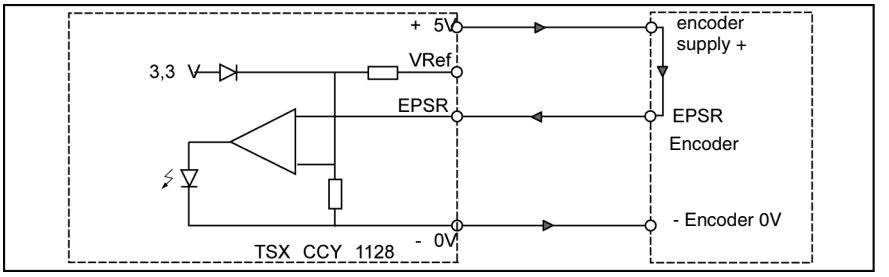

Diagram of the connection process if the encoder has no supply feedback

In this case, the EPSR input is connected to the positive supply at the encoder.

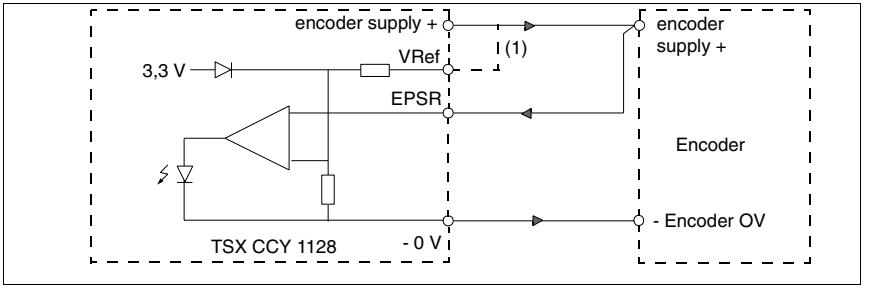

Connecting the encoder supply to the TSX CCY 1128

Introduction

The encoder supply can be connected:

- either by using a TELEFAST ABE-7H16R20 cable interface, which is then connected to the module using a TSX CDP ••3 cable.
- or directly, using a TSX CDP •01 pre-wired strand

Process diagram for connecting the encoder supply to the TELEFAST interface

The diagram below shows the process for connecting the encoder supply.

- At 24 VDC for an encoder with a 10…30 VDC supply format,
- and at 5 VDC for an encoder with a 5 VDC supply.

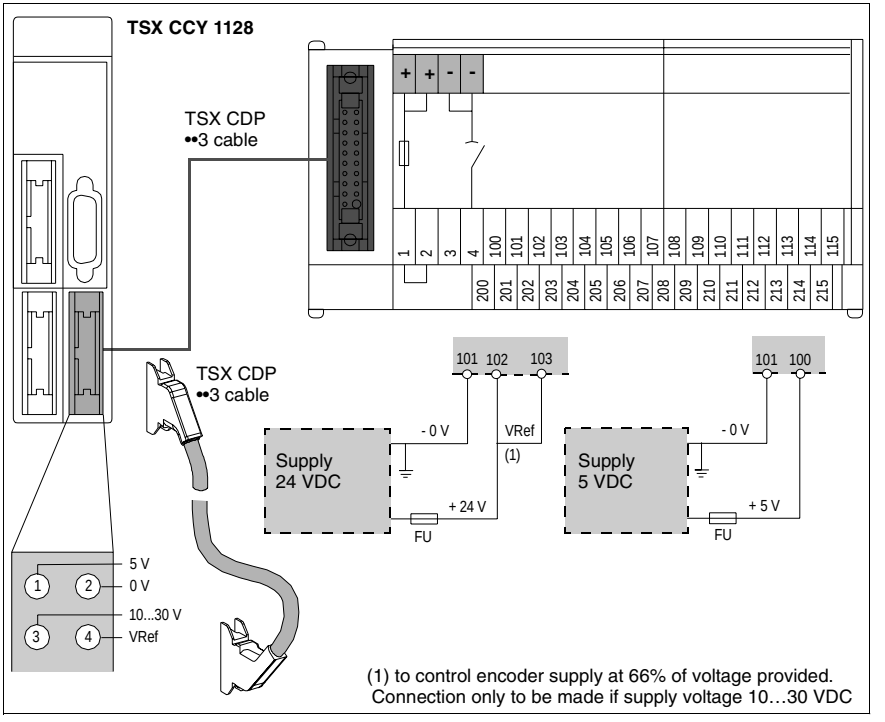

Catalog of TSX CDP ••3 connector cables

The table below gives the different references for the cables connecting the TELEFAST to the module, and their respective lengths.

Cable references	Cable lengths
TSX CDP 053	0.5 meters
TSX CDP 103	1 meter
TSX CDP 203	2 meters
TSX CDP 303	3 meters
TSX CDP 503	5 meters

Diagram showing the process for connecting the supply using a TSX CDP •01 pre-wired strand

The diagram below shows the process for connecting the encoder supply.

- At 24 VDC for an encoder with a 10…30 VDC supply format,
- and at 5 VDC for an encoder with a 5 VDC supply.

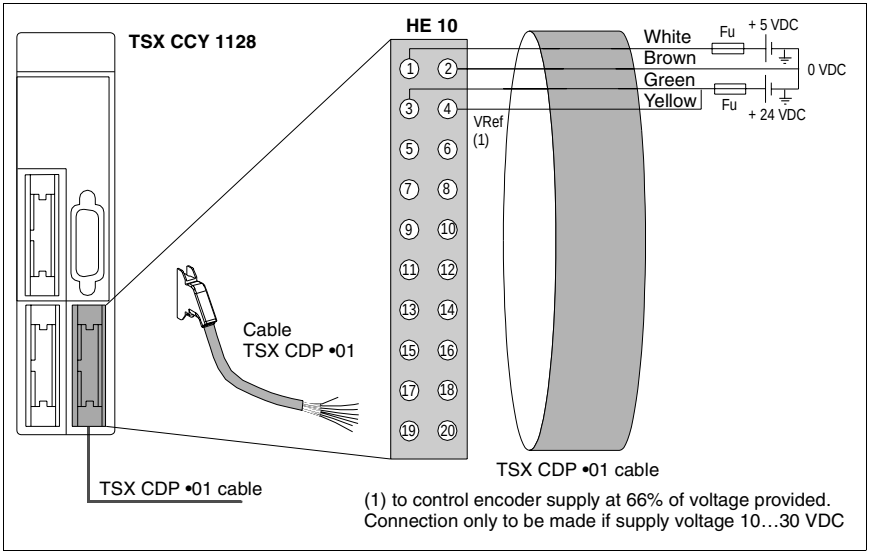

Catalog of TSX CDP •01 connector cables

The table below gives the different references for the cables connecting the TELEFAST to the module, and their respective lengths.

Cable references	Cable lengths
TSX CDP 301	3 meters
TSX CDP 501	5 meters

Recommendations

- Maximum length of wires between the supply outputs and the connection points on the TELEFAST: must be less than 0.5 meters.
- Protection on the + supply: although the module has several built-in protection systems to guard against wiring errors and accidental short-circuits on the cables, it is vital to install a 1A maximum non-delay fuse (Fu) on the + supply.
- Connection of the 0 V supply to the protective ground: must be as close as possible to the supply output.

TSX CAP S15 connection accessory

At a Glance

The TSX CAP S15 accessory comprises 2 15-pin SUB D connectors, and ensures the link between the module's connection interface and the encoder's connection string.
The table below introduces the TSX CAP S15 connection accessory.

Diagram	References	Use	Composition
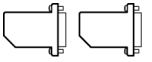	TSX CAP S15	Can be used in the module/encoder connection string	Kit comprises 2 15-pin SUB D connectors with covers.

Integrating the TSX CAP S15 into the connection string

The diagram below shows how to integrate a 15-pin SUB D connector from the TSX CAP S15 kit into the encoder connection string.

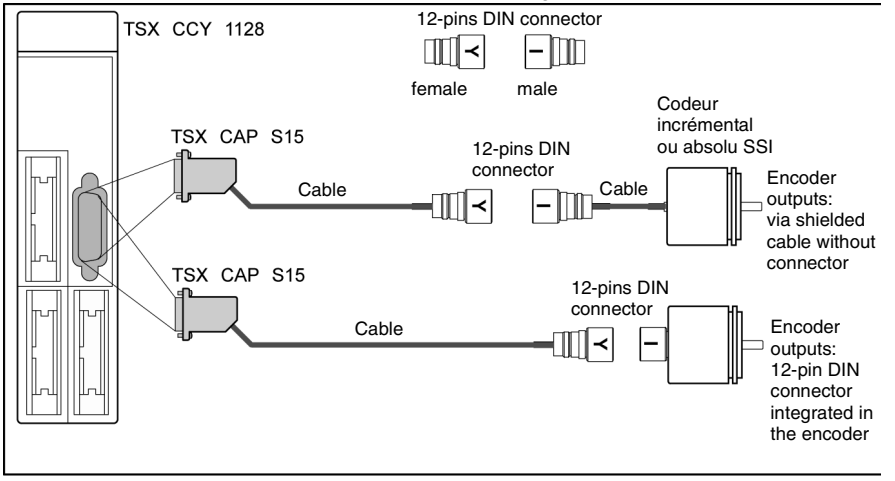

TSX TAP S1505/S1524 and TSX CCP S15• connection accessories

Introduction to the various accessories

The table below introduces the various accessories, their uses and functions.

Diagram	References	Use	Function
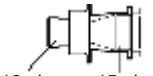	TSX TAP S1505	Can be used in a module/encoder connection string to connect a 5VDC incremental encoder with RS422 outputs, using A+/A-, B+/B- and Z+/Z- signals.	Mechanical interface equipped with two connectors, which allow a 15-pin SUB D connection and a 12-pin DIN connection to be used.
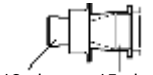	TSX TAP S1524	Can be used in a module/encoder connection string to connect a 24VDC encoder with Totem Pole outputs, using A, B, and Z signals.	Mechanical interface equipped with two connectors, which allow a 15-pin SUB D connection and a 12-pin DIN connection to be used.
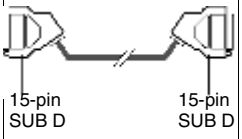	TSX CCP S15•	Can be used in a module/encoder connection string to connect the module to a TSX TAP S1505 or TSX TAP S1524	Connector cables comprising one cable with 24 gage wires, and equipped with a 15-pin SUB D connector at each terminal.

Integrating the TSX TAP S1505/ S1524 and TSX CCP S15• into the connection string

The diagram below shows how to integrate the TSX CCP S15, TSX TAP S1505 and TSX TAP S1524 accessories into the connection string of an encoder:

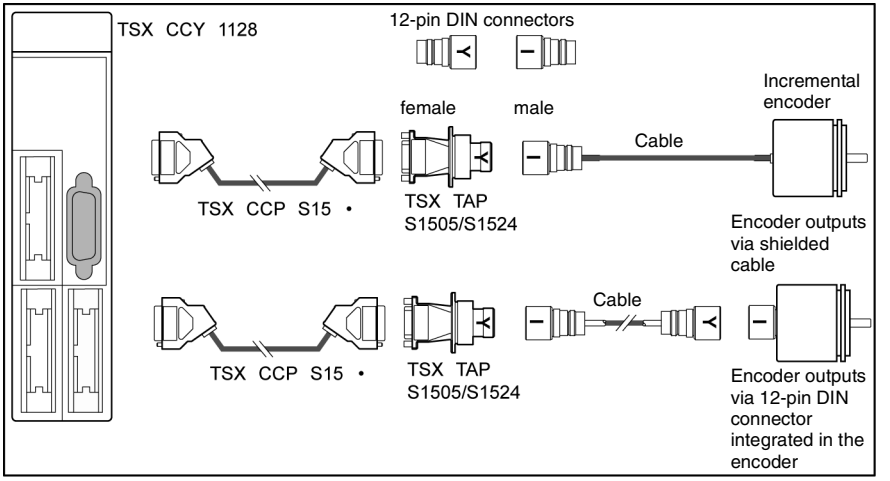

Installing the TSX TAP S1505/ S1524 accessories

The diagrams below show the two methods for installing these accessories.

Installing on a Telequick AM1-PA• board	**Installing on the cabinet lead-in**
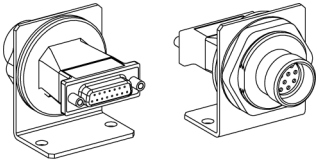	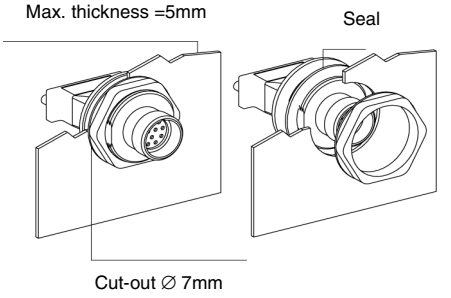

Dimensions of the TSX TAP S1505/S1524 accessories

The diagram below provides the dimensions of the sides and the mounting distance on the Telequick AM1-PA• board of the TSX TAP S1505 and TSX TAP 1524 accessories.

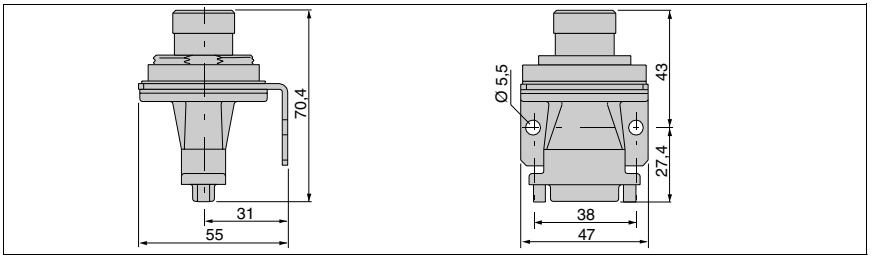

Anti-clockwise direction for the 12-pin DIN connectors in the connection string

In order to facilitate connections, the pin numbers of the various 12-pin DIN connectors in the connection string must correspond to each other. In order to allow this, the pinout configuration of the connectors must be:

- in an anti-clockwise direction for connectors belonging to the cable that relies on encoder accessory TSX TAP S1505/S1524,
- in an anti-clockwise direction for connectors belonging to the encoder and the TSX TAP S1505/S1524 accessory.

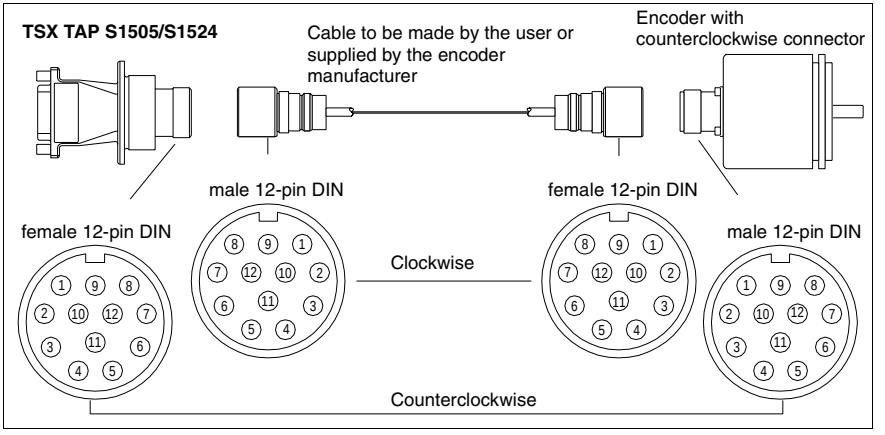

Pinout configuration for the TSX TAP S1505 accessory connectors

The diagram below shows the pinout configuration of the TSX TAP S1505 accessory at the 15-pin SUB-D connector terminal, and the 12-pin DIN connector terminal.

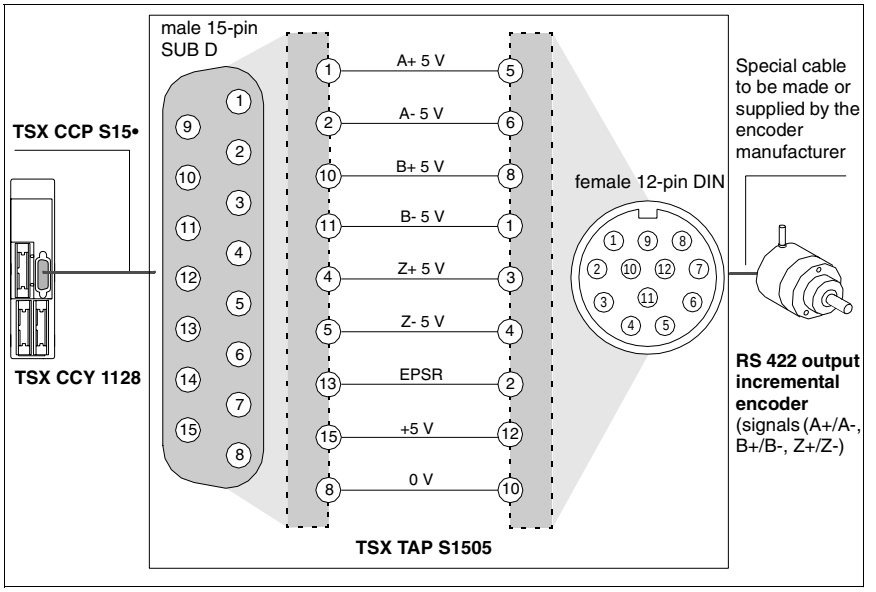

Pinout configuration for the TSX TAP S1524 accessory connectors

The diagram below shows the pinout configuration of the TSX TAP S1524 accessory at the 15-pin SUB D connector terminal, and the 12-pin DIN connector terminal.

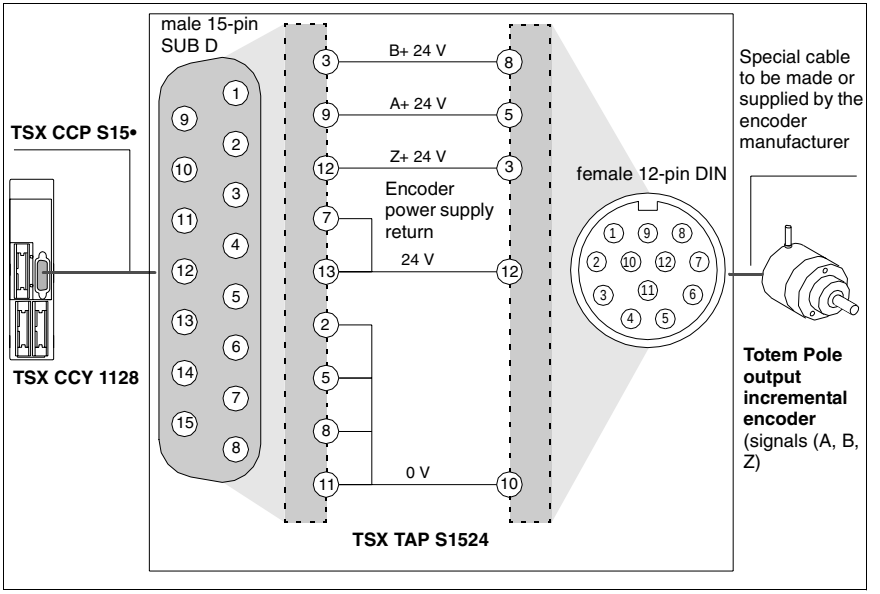

Connecting the auxiliary inputs and track outputs of the TSX CCY 1128

15

At a Glance

Subject of this chapter

This Chapter describes the connection procedure for the auxiliary inputs and track outputs of the TSX CCY 1128 electronic cam module.

What's in this Chapter?

This chapter contains the following topics:

Topic	Page
Introduction to the connection interfaces of the TSX CCY 1128	310
Connecting the auxiliary inputs of the TSX CCY 1128	313
Connecting the track outputs of the TSX CCY 1128	321

Introduction to the connection interfaces of the TSX CCY 1128

Connection interfaces

The three HE10 connectors located on the front panel of the module are for connecting:

- the sensors and pre-actuators inline with the module inputs/outputs,
- the sensor and pre-actuators supplies inline with the module inputs/outputs.

The module is connected to the sensors and pre-actuators using:

- either TELEFAST connectors and TSX CDP ••3 cables (recommended),
- or TSX CDP •01 strips.

Illustration

The diagram below shows the input/output connection strip of a TSX CCY 1128 module.

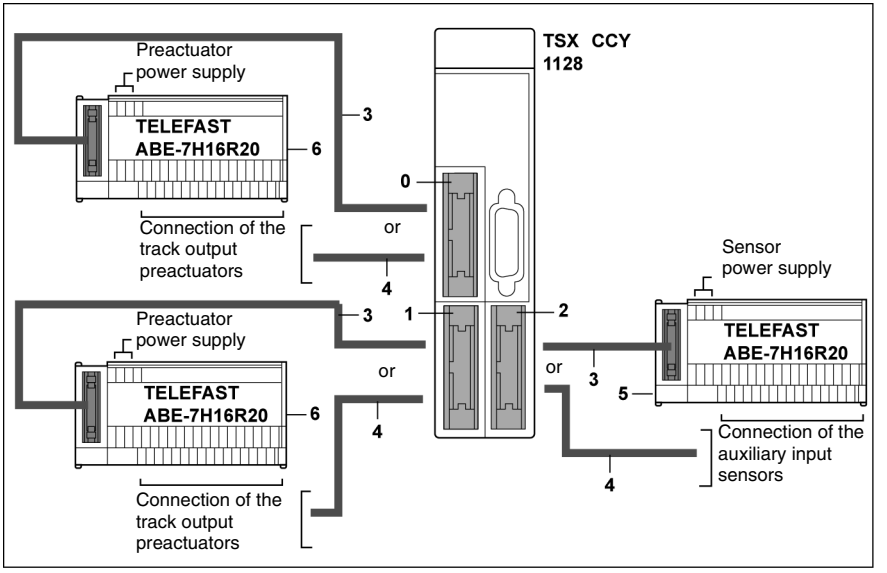

Elements and their functions

The table below gives the different elements of the connection strip.

Number	Elements	Functions
0	20-pin HE10 type connector	Allows connection of: • the pre-actuators controlled by the group 0 and 1 track outputs • the pre-actuator supply
1	20-pin HE10 type connector	Allows connection of: • the pre-actuators controlled by the group 2 and 3 track outputs • the pre-actuator supply
2	20-pin HE10 type connector	Allows connection of: • the sensors that control the auxiliary inputs, • the sensor supply, • the incremental or absolute SSI encoder supply
3	TSX CDP••3 cables, equipped with a HE10 connector at each terminal	Allow the module to be connected to the TELEFAST connector. 5 lengths are suggested: • TSX CDP 053: 0.5 meters in length • TSX CDP 103: 1 meter in length • TSX CDP 203: 2 meters in length • TSX CDP 303: 3 meters in length • TSX CDP 503: 5 meters in length
4	TSX CDP•01 strips, equipped with a HE10 connector at one terminal, and free wires at the other, identified using a color code	Allow direct connection between the module inputs/outputs and the sensors and pre-actuators. 2 lengths are suggested: • TSX CDP 301: 3 meters in length • TSX CDP 501: 5 meters in length
5	TELEFAST ABE-7H16R20 connectors	Connects a HE10 connection and a screw terminal block connection, allowing a rapid connection of supplies, sensors and pre-actuators

Connection accessories

The sensors are connected to the auxiliary inputs, and the pre-actuators to the track outputs by:

- either using a TELEFAST ABE-7H16R20 connector and TSX CDP ••3 cable (recommended system),
- or directly, using TSX CDP •01 strips

The diagram below shows these two types of connection

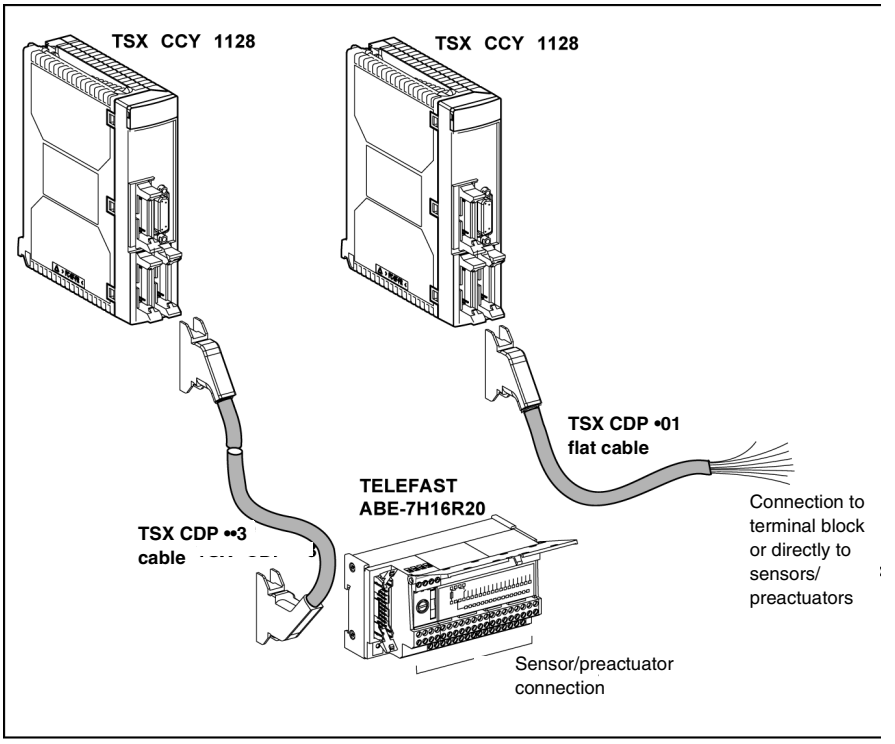

Connecting the auxiliary inputs of the TSX CCY 1128

Number of auxiliary inputs

The TSX CCY 1128 module has 3 auxiliary inputs:

Auxiliary	Functions
IREC	Adjustment of the position measurement
ICAPT0	Position capture in register 0
ICAPT1	Position capture in register 1

Diagram

The auxiliary inputs use a 24 VDC from an external supply provided via the connector.
The diagram below shows this supply.

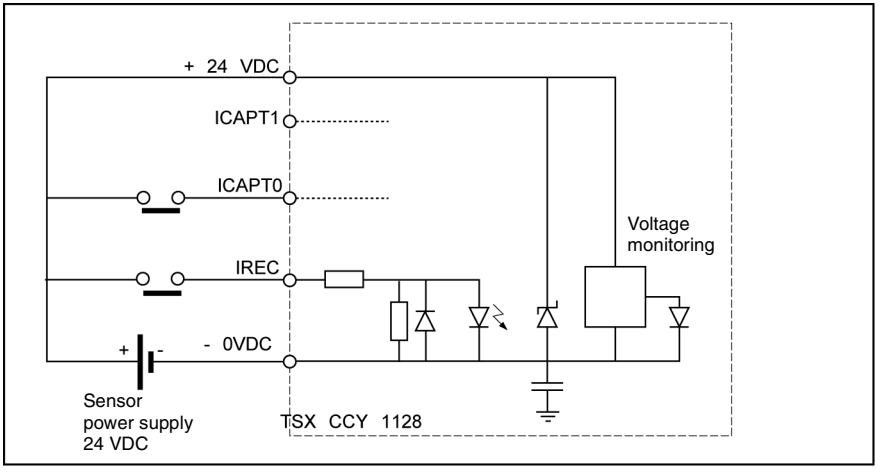

Positioning the HE10 connector, and identifying the signals

The diagram below represents the position of the HE10 connector on the module in relation to the auxiliary inputs and the identification of the different signals delivered by the connector.
This connector delivers exactly the same supply as the incremental or absolute SSI encoder. This information will be elaborated in Chapter 3.

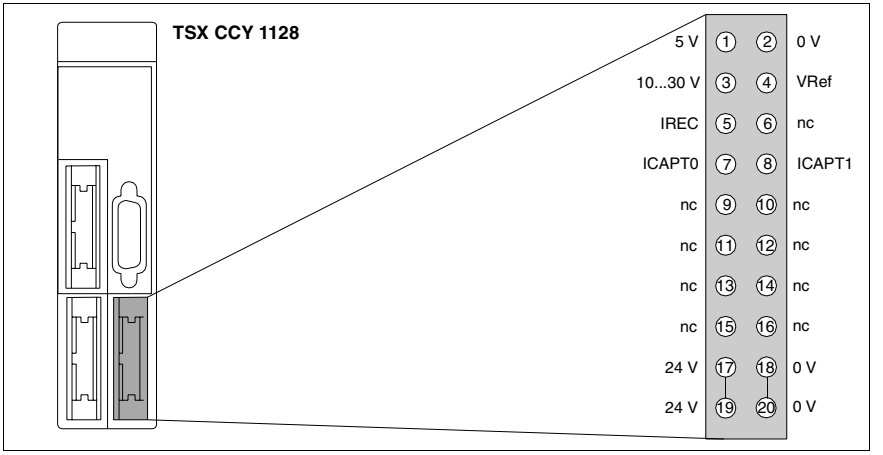

Pinout configuration of the module's HE10 connector

The pinout configuration of the HE10 connector in relation to the auxiliary inputs is as follows:

Diagram (front view)	Pin No.	Signal	Designation
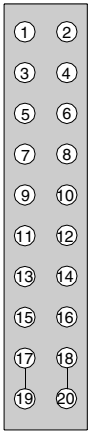	1	5 V	Encoder supply input +5 VDC
	2	0 V	Encoder supply input – 0VDC
	3	10..30V	Encoder supply input + 10…30VDC
	4	VRef	Reference input voltage for encoder supply monitoring
	5	IREC	Auxiliary adjustment input
	6	-	Not wired
	7	ICAPT0	Auxiliary capture input 0
	8	ICAPT1	Auxiliary capture input 1
	9	-	Not wired
	10	-	Not wired
	11	-	Not wired
	12	-	Not wired
	13	-	Not wired
	14	-	Not wired
	15		Not wired
	16		Not wired
	17	24 V	Sensor supply input + 24VDC
	18	0 V	Sensor supply input - 0VDC
	19	24 V	Sensor supply input + 24VDC
	20	0 V	Sensor supply input - 0VDC

Process diagram The diagram below represents the process for connecting the auxiliary inputs

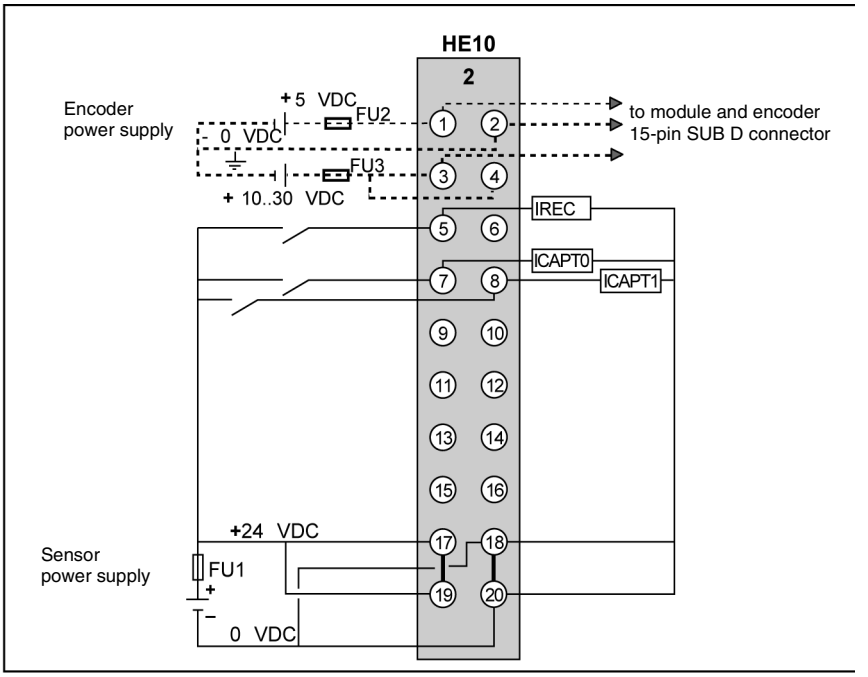

Connection using TELEFAST connector and TSX CDP ••3cable

Availability of signals at the screw terminal block of the TELEFAST connector

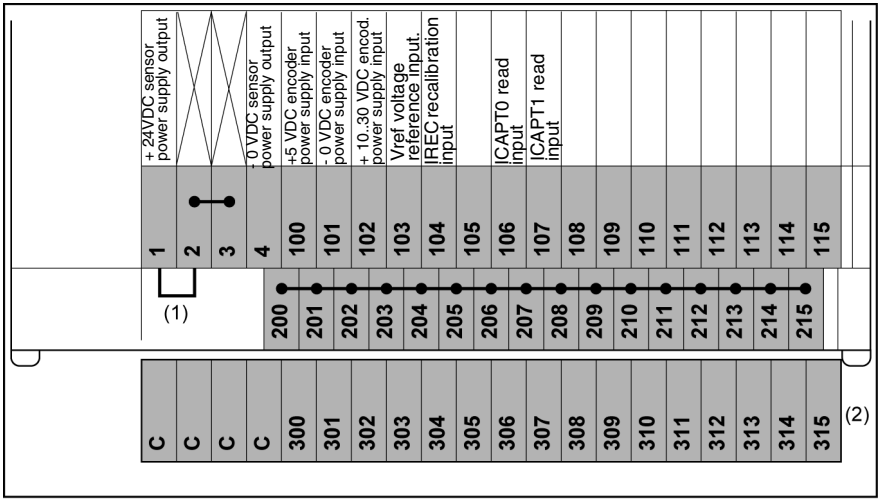

(1) At the TELEFAST ABE-7H16R20 connector, the position of the jumper wire determines the polarity of all terminals from 200 to 215:

- jumper wire in position 1 or 2: terminals 200 to 215 have positive polarity,
- jumper wire in position 2 or 4: terminals 200 to 215 have negative polarity.

(2) At the TELEFAST ABE-7H16R20 connector, it is possible to add an optional ABE-7BV20 bar to create a second shared sensor (positive or negative according to user's choice).

Connection using TELEFAST connector and TSX CDP ••3cable

Example for connecting sensors to the auxiliary inputs

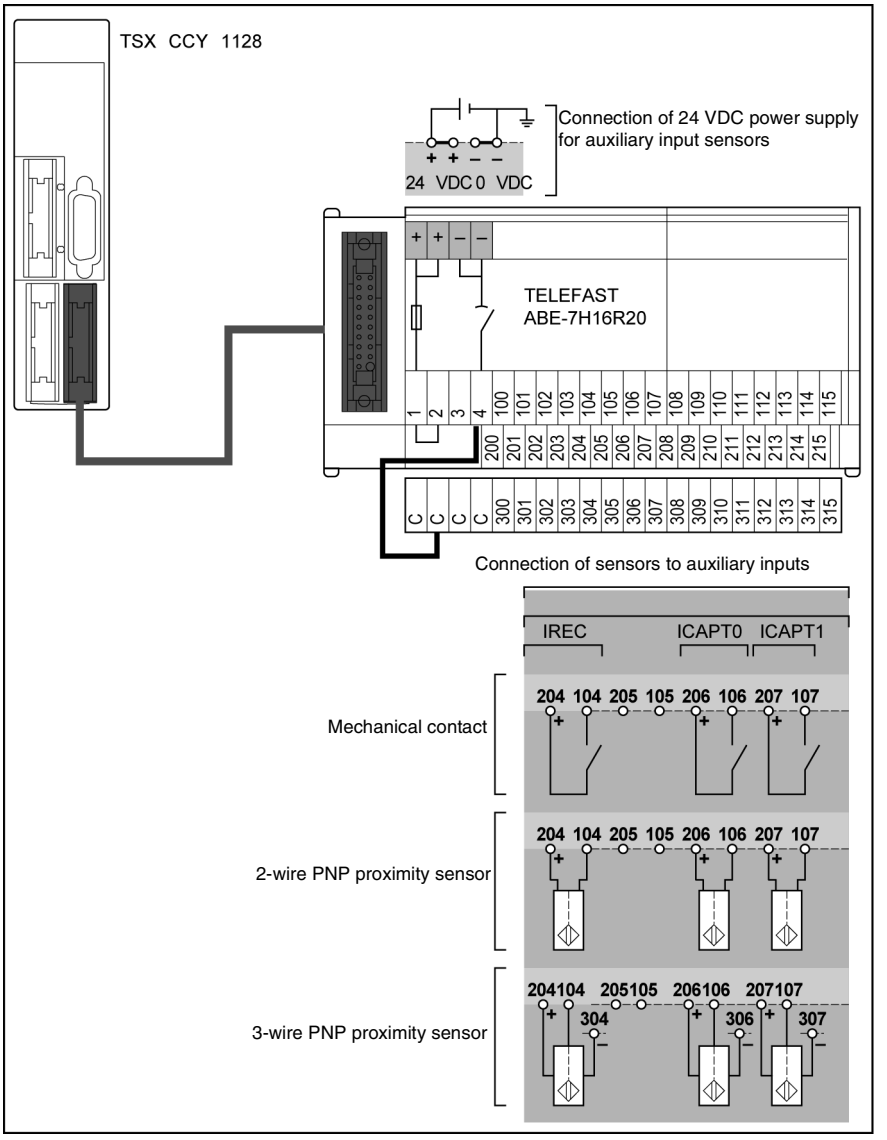

Correspondence between the TELEFAST terminal block and the module's HE10 connector

TELEFAST screw terminal block (No. of terminal)	**HE10 connector 20 points (pin number)**	**Type of signal**	**Functions**
100	1	+ 5VDC	Encoder supply
101	2	- 0 VDC	
102	3	+10...30VDC	
103	4	VRef	Reference input voltage for encoder supply feedback monitoring
104	5	IREC	Adjustment input
105	6	Not connected	-
106	7	ICAPT0	Capture input register 0
107	8	ICAPT1	Capture input register 1
108 to 115	9 to 16	Not connected	-
+ 24VDC	17	-	Auxiliary input sensor supply
- 0 VDC	18	-	
+ 24VDC	19	-	
- 0 VDC	20	-	
1	-	-	Terminals 200 to 215 at + 24VDC if terminals 1 and 2 are connected
2	-	-	
3	-	-	Terminals 200 to 215 at - 24VDC if terminals 3 and 4 are connected
4	-	-	
200...215	-	-	Connecting shared sensors to: ● +24VDC if terminals 1 and 2 are connected ● - 0VDC if terminals 3 and 4 are connected
300...315	-	-	At the optional ABE-7BV20 bar, the terminals that can be used as a shared sensor must be connected, using a wire, to the desired shared voltage.

Connection using TSX CDP •01 strips

This type of connection is used to connect all signals travelling to or from the module directly:

- at a terminal block, or
- at the sensors.

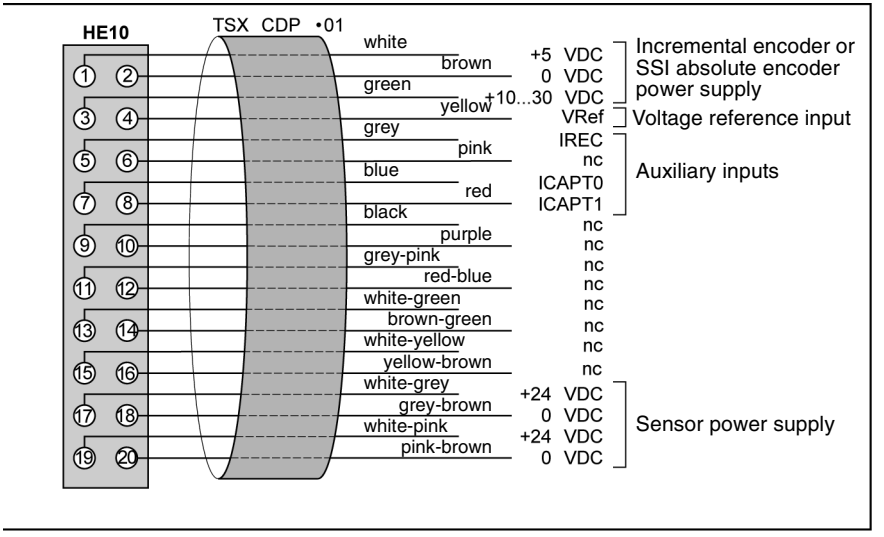

nc – not connected

Connecting the track outputs of the TSX CCY 1128

Number of track outputs and their distribution

The TSX CCY 1128 module has 32 track outputs of which 24 are physically accessible.
These track outputs are divided into 4 groups on two HE10 connectors at the front panel of the module

Connectors	0		1	
Groups	0	1	2	3
Tracks	01234567	0123	01234567	0123
Outputs	Q0. 01234567	Q1. 0123	Q2. 01234567	Q3. 0123

Diagram

The diagram below shows a track output.

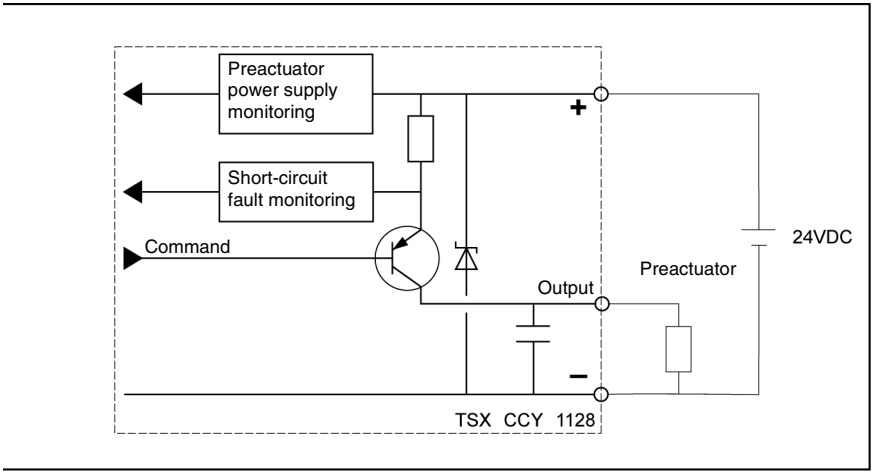

Positioning the HE10 connector, and identifying the signals

The diagram below represents the position of the HE10 connectors on the module in relation to the track outputs and the identification of the different signals delivered by the connectors.

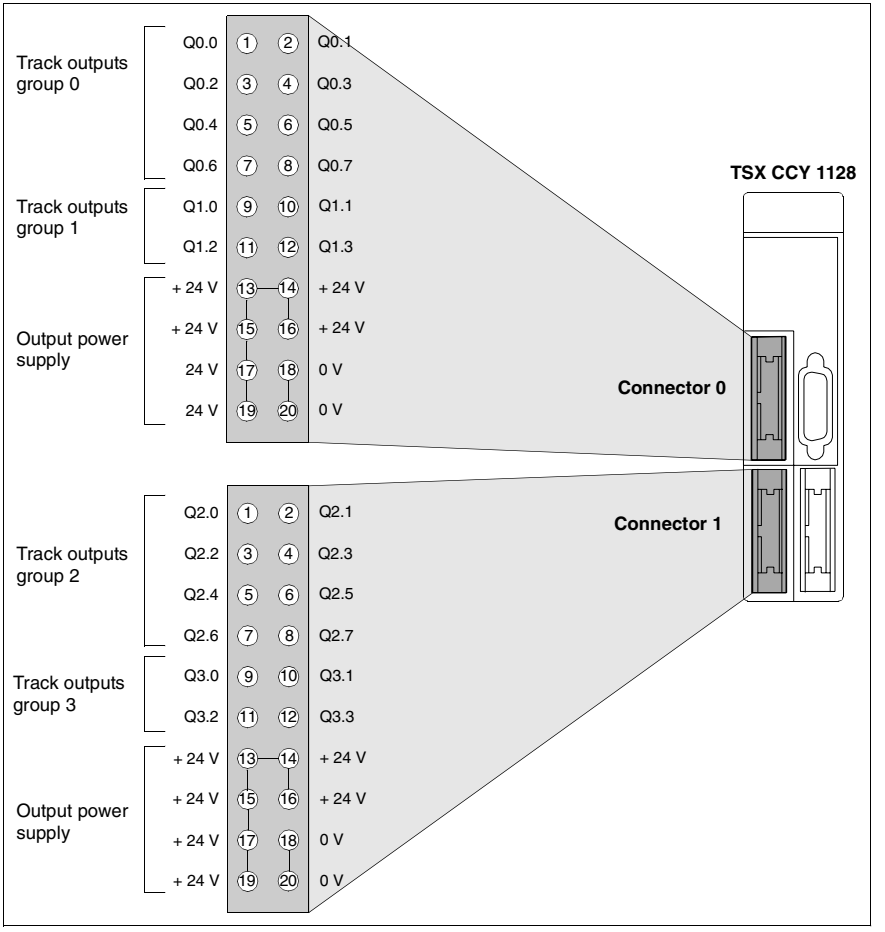

Process diagram The diagrams below show the connection process.

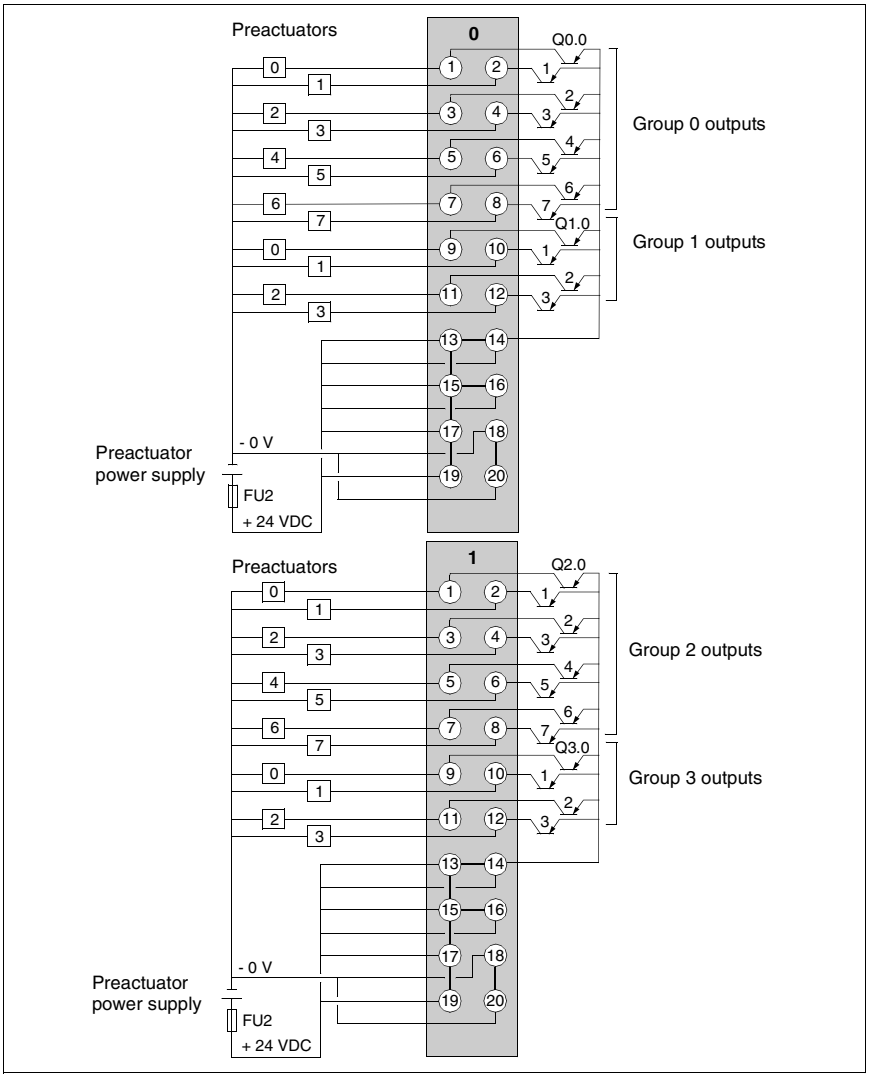

Connection using TELEFAST connector and TSX CDP ••3cable

Availability of **connector 0** signals at the TELEFAST screw terminal block

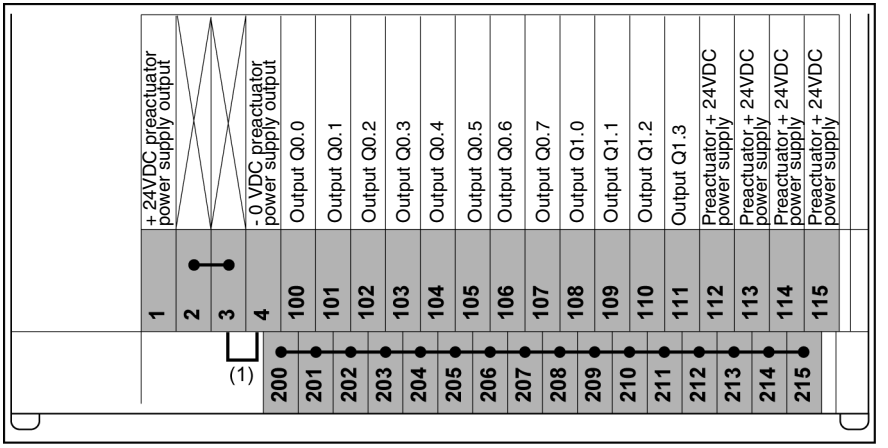

Availability of **connector 1** signals at the TELEFAST screw terminal block

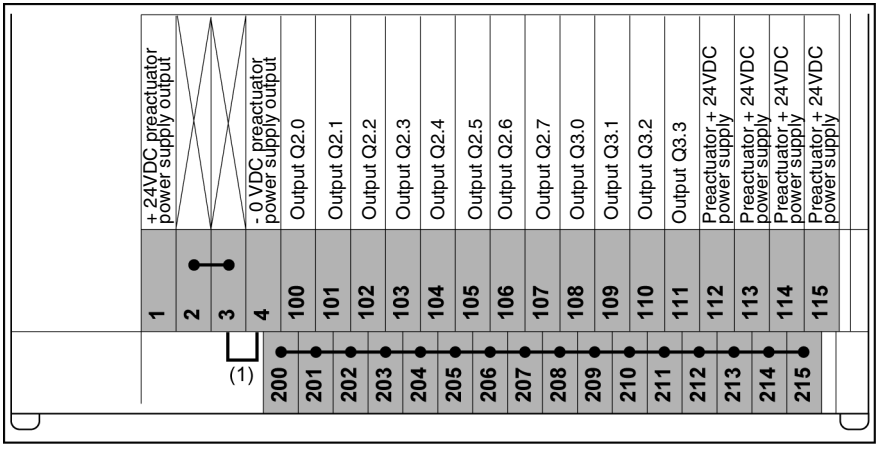

(1) At the TELEFAST ABE-7H16R20 connector, the position of the jumper wire determines the polarity of all terminals from 200 to 215:

- jumper wire in position 1 or 2: terminals 200 to 215 have positive polarity,
- jumper wire in position 3 or 4: terminals 200 to 215 have negative polarity.

Connection using TELEFAST connector and TSX CDP •••3cable

Example for connecting pre-actuators to the track outputs of connector 0 (groups 0 and 1). Proceed in the same way for connector 1 (output groups 2 and 3).

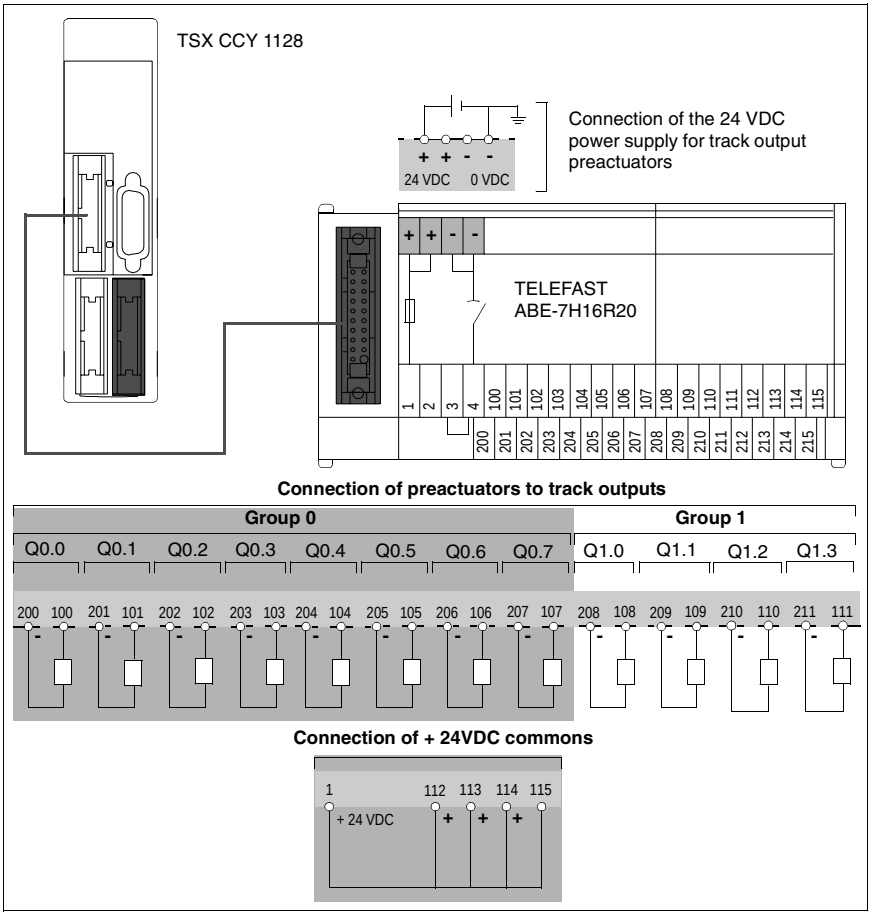

The table below gives the correspondence between the TELEFAST screw terminal block and the HE10 connectors of the module (connectors 0 and 1).

No. of terminal on TELEFAST screw terminal block	**Pin no. of HE10 connector**	**Type of signals at connectors**		**Functions at connectors**	
		0	**1**	**0**	**1**
100	1	Q0.0	Q2.0	Group 0 track outputs	Group 2 track outputs
101	2	Q0.1	Q2.1		
102	3	Q0.2	Q2.2		
103	4	Q0.3	Q2.3		
104	5	Q0.4	Q2.4		
105	6	Q0.5	Q2.5		
106	7	Q0.6	Q2.6		
107	8	Q0.7	Q2.7		
108	9	Q1.0	Q3.0	Group 1 track outputs	Group 3 track outputs
109	10	Q1.1	Q3.1		
110	11	Q1.2	Q3.2		
111	12	Q1.3	Q3.3		
112	13	+ 24VDC		Pre-actuators receive a shared + 24VDC supply if the connection at terminal 1 of the TELEFAST is external	
113	14				
114	15				
115	16				
+ 24VDC	17-19	+ 24VDC		Track outputs' pre-actuator supply	
- 0 VDC	18-20	- 0 VDC			
1	-	+ 24VDC		Terminals 200 to 215 at + 24VDC if terminals 1 and 2 are connected	
2	-	Shared by terminals 200 to 215			
3	-	Shared by terminals 200 to 215		Terminals 200 to 215 at – 0 VDC if terminals 3 and 4 are connected	
4	-	- 0 VDC			

No. of terminal on TELEFAST screw terminal block	Pin no. of HE10 connector	Type of signals at connectors		Functions at connectors	
		0	1	0	1
200...215	-	• + 24 VDC if terminals 1 and 2 are connected, - 0VDC if terminals 3 and 4 are connected • + 24 VDC if terminals 1 and 2 are connected, - 0VDC if terminals 3 and 4 are connected		Connecting shared sensors	

Connection using TSX CDP •01 strips

This type of connection is used to connect all signals travelling to or from the module directly:

- at a terminal block, or
- at the pre-actuators.

The diagram below gives the correspondence between wire color and HE10 connector pin number for connectors 0 and 1

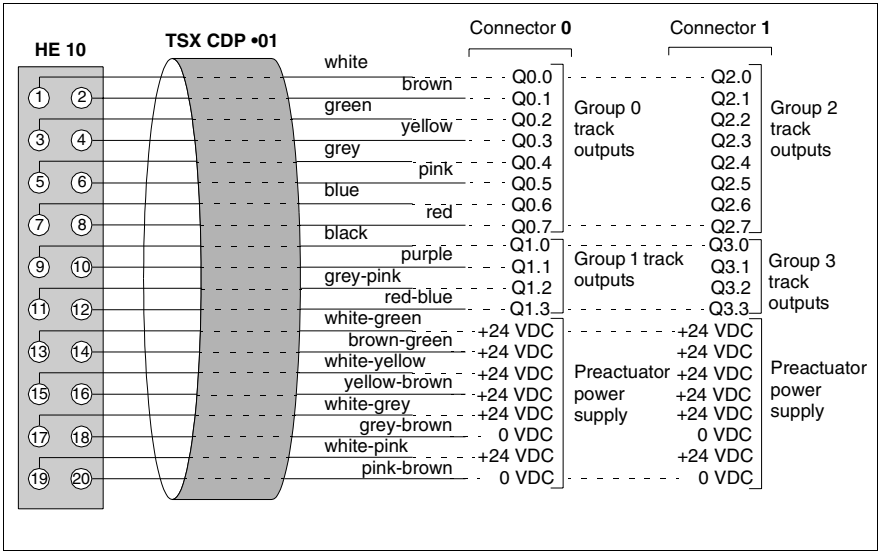

TSX CCY 1128 module displays

16

At a Glance

Subject of this chapter

This Chapter introduces the various LEDs of the TSX CCY 1128 electronic cam module and their meanings.

What's in this Chapter?

This chapter contains the following topics:

Topic	Page
Introduction to the display block of the TSX CCY 1128 module	330
The various states of the LEDs on the TSX CCY 1128 and their meaning	331

Introduction to the display block of the TSX CCY 1128 module

Role

The module's display block has four LEDs, which provide information on:
- the operating mode of the module, normal operating mode or module switched off or experiencing a fault
- internal or external module operating faults.

Physical presentation

The diagram below is a representation of the physical appearance of the module's display block and the location of its four LEDs

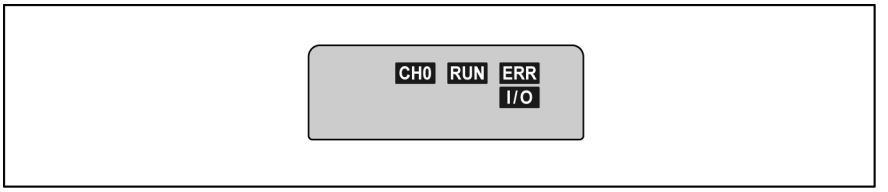

The various states of the LEDs on the TSX CCY 1128 and their meaning

Signaling operating mode

The table below gives the various states of the RUN lamp and their meanings

LED	Color	State	Meaning
RUN	Green	Lit	Module operating normally
		Off	Module switched off or experiencing a fault

Signaling faults

The table below gives the various states of the ERR, I/O and CH0 LEDs and their meanings.

LED	Color	State	Meaning
ERR	Red	Lit	Internal module error: • module has broken down
		Flashing	• Error in communication with processor • Application missing, invalid or experiencing a fault during execution
		Off	Operating normally, no faults
I/O	Red	Lit	External module fault: • Cabling fault • Encoder supply fault • Configuration/adjustment parameters declined
		Flashing	Insignificant
		Off	Operating normally, no faults
CH0	Green	Lit	Operating normally, channel is active
		Flashing	The channel is not functioning correctly due to: • an external fault • a communication error
		Off	Channel inoperative: • Channel not configured • Channel incorrectly configured

TSX CCY 1128 module electrical characteristics

17

At a Glance

Subject of this chapter

This Chapter describes the various electrical characteristics of the TSX CCY 1128 cam module.

What's in this Chapter?

This chapter contains the following topics:

Topic	Page
General electrical characteristics of the TSX CCY 1128	334
Characteristics of the auxiliary inputs of the TSX CCY 1128	335
Characteristics of the encoder supply feedback monitor for the TSX CCY 1128	336
Characteristics of the auxiliary inputs of the TSX CCY 1128	337
Characteristics of the track outputs of the TSX CCY 1128	338

General electrical characteristics of the TSX CCY 1128

Table of the general characteristics of the module

The following table gives the general characteristics of the module.

Parameter designation		Values	
		Typical	**Maximum**
Current used by the module	internal 5 V (with internal ventilator in the operating module)	0.66 A	1 A
	24V sensors/pre-actuators (auxiliary inputs and track outputs)	15 mA	18 mA
	10…30 V (using an absolute SSI encoder, and 24V supply only)	11 mA	20 mA
Power dissipated in the module		7 W (1)	10 W (2)
Sensor/pre-actuator supply monitoring		Yes	
Insulation resistance		> 10 MOhms at 500 VDC	
Dielectric rigidity with the ground connection or the 0 V PLC logic		1000 V eff. - 50/60Hz per min	
Operating temperature		0 to 60°C	
Storage temperature		-25°C to 70°C	
Hygrometry without condensation		5% to 95%	
Operating altitude		0 to 2000m	

(1) Under normal operating conditions: only one active auxiliary input, 24 VDC supply voltage, RS 422 standard signal.
(2) Under extreme operating conditions: all auxiliary inputs active, 30 VDC supply voltage, etc

Characteristics of the auxiliary inputs of the TSX CCY 1128

Characteristics of the encoder inputs

The table below gives the characteristics of the A, B and Z encoder inputs.

Input			**RS 422 use**	**Use at 10… 30 VDC**
Logic			Differential inputs	Positive or negative
Nominal values	Voltage		-	24 V
	Current		10 mA	15.5 mA
Thresholds	Voltage		< 5.5 V	< 30 V (possible up to 34V, limited to 1hr in 24)
	In state 1	Voltage	> 3 V (1)	> 11 V
		Current	> 5.8 mA (1)	> 5 mA
	In state 0	Voltage	< - 3 V	< 5 V
		Current	< - 5.8 mA	< 2 mA
Input impedance at nominal voltage			-	1.5 kOhms
Type of input			Resistant	Resistant
Maximum permitted frequency	Incremental encoders		500 kHz multiplied by 1 250 kHz multiplied by 4	

(1) The positive or negative differential voltage must be higher then 3 volts, and the current in the positive or negative loop must be higher than 5.8 volts to guarantee:

- the inclusion of count pulses up to 500 kHz,
- that the line control does not detect errors, irrespective of the frequency.

Note: Comparison of the RS 422 standard encoder outputs

An encoder with RS 422 standard outputs can control the inputs of two TSX CCY 1128 modules in parallel. In order to guarantee the necessary voltage levels, the encoder supply voltage must be higher than 4.5 V.

Characteristics of the encoder supply feedback monitor for the TSX CCY 1128

Characteristics of the EPSR input

The table below gives the characteristics of the encoder supply feedback monitor.

Parameters		Values
Thresholds for the EPSR input	Voltage	30 V (possible up to 34V, limited to 1h. par 24h)
	Current	< 1.5 mA
Voltage for OK state	Vref input free	OK if U> 3.3V
	VRef connected to + encoder supply	OK if U > 66% of the voltage recorded at the VRef input

Characteristics of the auxiliary inputs of the TSX CCY 1128

Table of the auxiliary inputs characteristics

The following table gives the characteristics of the IREC, ICAPT1 and ICAPT2 auxiliary inputs.

Parameter designation			Symbols	Values	Units
Nominal values	Voltage		Un	24	V
	Current		In	8	mA
	Sensor supply, ripple included		U1 Utime (1)	19...30 34	V
Thresholds	In state 1	Voltage	Uon	> 11	V
		Current at Uon	Ion	> 3	mA
	In state 0	Voltage	Uoff	< 5	V
		Current	Ioff	< 1,5	mA
Response time	State 0 to 1		Ton	< 100	ms
	State 1 to 0		Toff	< 100	ms
Sensor voltage check threshold	OK		Uok	> 18	V
	Fault		Udef	< 14	V
Input impedance			Re	3	kOhms
Type of input	Resistive				
Logic type	Positive (sink)				
IEC 1131 compatibility with sensors	Type 1				
3-wire/2-wire proximity sensor compatibility	• 3-wire proximity sensor: all 3-wire proximity sensors operating at 24 VDC • 2-wire proximity sensor: all 2-wire proximity sensors operating at 24 VDC have the following characteristics: Breakdown voltage when closed: < 7V Minimum switched current: < 2.5 mA Residual current when open: < 1.5 mA				
Dielectric rigidity with the ground connection	1500 V eff 50/60 Hz per mn				

(1) Utime: maximum permitted voltage for 1 hour in every 24.

Characteristics of the track outputs of the TSX CCY 1128

Table of characteristics of the track outputs

The following table gives the characteristics of the track outputs.

Parameter designation			Symbols	Values	Units
Nominal values	Voltage		Un	24	V
	Current		In	500	mA
Thresholds	Voltage		U1	19...30	V
			Utime (1)	34	V
	Maximum current per output for U= 30 V or 34 V		I1	600	mA
	Maximum current	per connector	I2	< 6	A
		per module	I3	< 12	A
Maximum power for lamp with tungsten filament			P1	10	W
Maximum switching frequency on inductive load			F	<0.6/LI	Hz
Electro unload time			T	< L/R	s
Pre-actuator voltage check threshold		OK	Uok	> 18	V
		Fault	Udef	< 14	V
Compatibility with direct current inputs			All direct current inputs with positive logic, and an input resistance of < at 15 kOhms		
Protection against overloads and short-circuits			Using current limiter and thermal circuit breaker (0.7A<Id<2A)		
Protection against overvoltage of the outputs			Using a Zener (breakdown) diode between the outputs and the +24V		
Protection against polarity inversions			Using a reverse diode on the supply		
Dielectric rigidity with the ground connection			1500 V eff 50/60 Hz per mn		
Compliance with IEC 1131-2			Yes		

Connecting an absolute encoder with parallel outputs to TSX CCY 1128

18

At a Glance

Subject of this chapter

This Chapter describes the procedure for connecting an absolute encoder with parallel outputs to the TSX CCY 1128 electronic cam module.

What's in this Chapter?

This chapter contains the following topics:

Topic	Page
Principle for connecting an absolute encoder to a TSX CCY 1128	340
TELEFAST ABE-7CPA11 base	341
Pinout configuration of the 15-pin SUB-D connectors of the module and the TELEFAST	344
Connecting an absolute encoder with parallel outputs	346
Wiring rules and precautions specific to the TELEFAST	349
Configuration of the TELEFAST connector	353

Principle for connecting an absolute encoder to a TSX CCY 1128

Connection string

The 15-pin SUB D connector, located on the front panel of the module, allows the connection of encoder and module using a TELEFAST ABE-7CPA11 connector.

- The TELEFAST connector receives:
  - all parallel signals from the encoder,
  - the 5VDC or 10…30VDC encoder supply source.
- The TELEFAST connector restores
  - signals for the module that have been encoded as RS 422 standard signals.

Illustration

The diagram below shows the principle for connecting an absolute encoder with parallel outputs to a TSX CCY 1128 module.

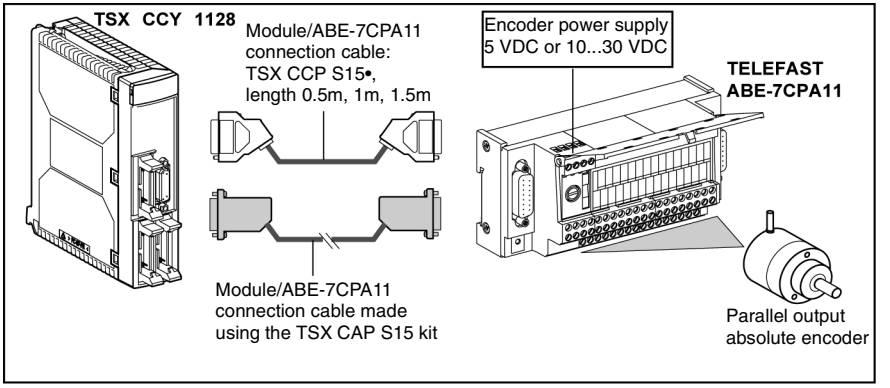

TELEFAST ABE-7CPA11 base

Role

The TELEFAST ABE-7CPA11 base ensures:

- the connection interface between:
  - the absolute encoder with parallel outputs, and
  - the TSX CCY 1128 module
- the conversion of the value position provided by the encoder with parallel outputs as RS 422 standard serial information. The absolute encoder must have pure or gray binary coding, with a maximum of 24 bits of data.

Appearance of the TELEFAST base

The diagram below represents the TELEFAST ABE-7CPA11 base and its various elements.

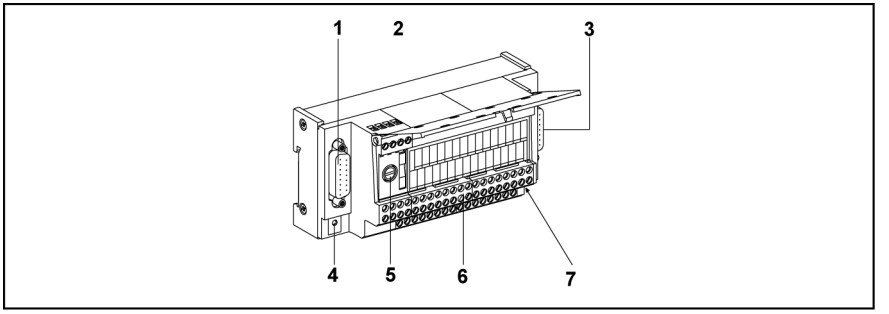

Elements and their functions

The table below gives the functions of the various elements of the TELEFAST.

Number	Elements	Functions
1	15 pin SUB-D connector.	Allows connection to the TSX CCY 1128 module, via a TSX CCP S15• cable.
2	Screw terminal block.	Allows connection of the encoder supply.
3	15 pin SUB-D connector.	Not used.
4	LED	When lit, shows that the TELEFAST is switched on.
5	Fuse	Ensures protection of the supply: • calibre: 1A, • type: non-delay fusion.
6	Screw terminal block	Allows connection to the encoder.
7	Microswitches	Allow configuration of the type of encoder relevant to the TELEFAST (gray or binary).

Characteristics of the TELEFAST base

General characteristics

The table below gives the general characteristics of the TELEFAST ABE-7CPA11 base.

Parameters	Values
Permitted voltage at 10…30 VDC	11...30 VDC
Permitted voltage at 5 VDC	5...6 VDC
Maximum frequency for changing the state of the lightweight bit	75 kHz
Read frequency of the serial frame	150 kHz...1 MHz
Current used (excluding encoder)	Typical: 90mA - Maximum: 130 mA
Dissipated power	Typical: 450mW - Maximum: 1,5 W
Limit of encoder supply feedback monitor	- 15% < V supply < + 15%
Insulation resistance	> 10MW at 500 VDC
Dielectric rigidity	1000 V eff -50/60 Hz per mn
Operating temperature	0…60°C
Storage temperature	-25°C…+70°C
Hygrometry	5%…95% without condensation
Operating altitude	0…2000 meters

Characteristics of the encoder reading inputs In0 to In23

The table below gives the different parameters of the TELEFAST inputs connected to the encoder channels.

Parameters	Type	Values
Logical input	Positive	State 0: U < 2.5 V, state 1: U > 3.9V
	Negative	State 0: U > 3.9V, state 1: U < 2.5 V
Compatibility with encoder outputs	Totem Pole outputs	11...30 VDC
	TTL 5 V outputs	5 VDC
	Transistor outputs with NPN open collector	11...30 VDC
Maximum input voltage	-	+30 VDC
Maximum length of encoder/TELEFAST cable	-	200 m This maximum distance depends on the type of encoder used, and limits the frequency of changing the lightweight bit. See TELEFAST base configuration

Parameters	Type	Values
Maximum length of encoder/TELEFAST cable	-	200 m. This maximum distance limits the frequency of the serial transmission clock. See the specific precautions and rules for cabling
Low limit for input voltage	-	0 VDC < VIL < 2.5 VDC
Upper limit for input voltage	-	3.9 VDC < VIH < 30 VDC

Pinout configuration of the 15-pin SUB-D connectors of the module and the TELEFAST

Pinout configuration of the module's 15-pin SUB-D connector

The pinout configuration for connecting an absolute encoder with parallel outputs using a TELEFAST ABE-7CPA11 is as follows.

Diagram (front view)	Pin No.	Signal	Designation
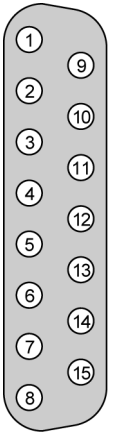	1	Data+	Encoder input, + data (5 VDC)
	2	Data-	Encoder input, - data
	3	-	-
	4	-	-
	5	-	-
	6	CLK +	Encoder input, CLK + (5 VDC)
	7	10…30 V	Encoder supply input (+ 10…30 VDC)
	8	0 V	Encoder supply input (- 0 VDC)
	9	-	-
	10	-	-
	11	-	-
	12	-	-
	13	EPSR	+ encoder supply feedback input. Receives + supply feedback from the encoder, which allows the module to verify the encoder's presence.
	14	CLK -	Encoder input, CLK -
	15	5 V	Encoder supply input (+ 5 VDC)

Pinout configuration of the TELEFAST 15-pin SUB-D connector

The pinout configuration of the TELEFAST ABE-7CPA11 15-pin SUB-D connector is as follows.

Diagram (front view)	Pin No.	Signal	Designation
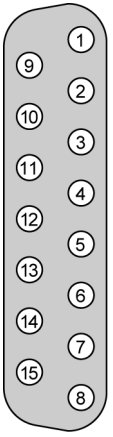	1	Data+	Encoder output, + data signal (5 VDC)
	2	Data-	Encoder output, - data signal
	3	-	-
	4	-	-
	5	-	-
	6	CLK +	Encoder output, + CLK signal (5 VDC)
	7	10…30 V	Encoder supply output (+ 10…30 VDC)
	8	0 V	Encoder supply output (- 0 VDC)
	9	-	-
	10	-	-
	11	-	-
	12	-	-
	13	EPSR	+ encoder supply feedback input. Receives + supply feedback from the encoder, which allows the module to verify the encoder's presence.
	14	CLK -	Encoder output, - CLK signal
	15	5 V	Encoder supply output (+ 5 VDC)

Connecting an absolute encoder with parallel outputs

Introduction

An absolute encoder with parallel outputs must always be connected to the module using a TELEFAST ABE-7CPA11 base. The signals sent to the module are RS 422 standard SSI serial signals. The encoder supply is 10…30 VDC or 5 VDC depending on the encoder type.

Diagram showing the principle of connecting an absolute encoder with parallel outputs on a 10…30 VDC supply

The diagram below represents the connection string of an absolute encoder with parallel outputs on a 10…30 VDC supply.

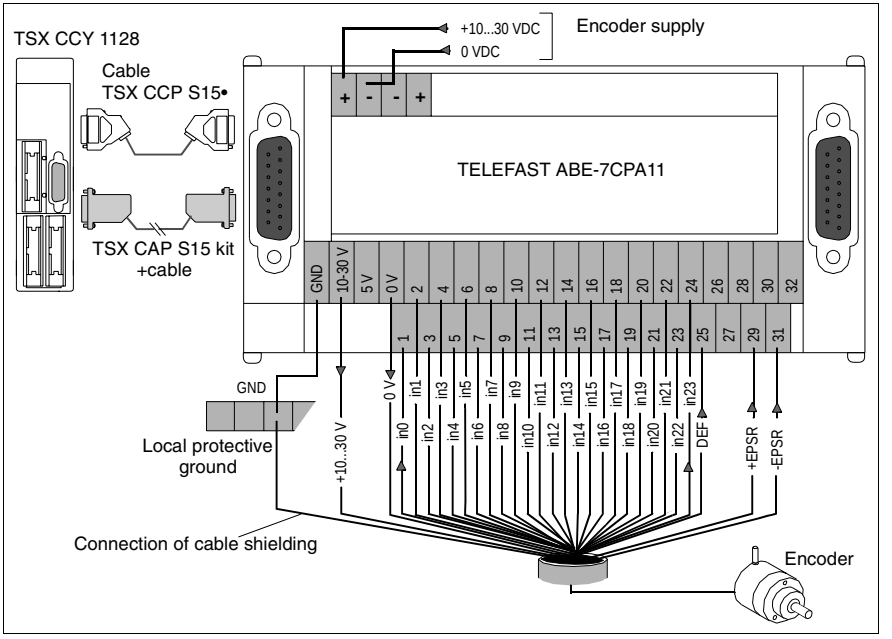

Diagram showing the principle of connecting an absolute encoder with parallel outputs on a 5 VDC supply

The diagram below represents the connection string of an absolute encoder with parallel outputs on a 5 VDC supply.

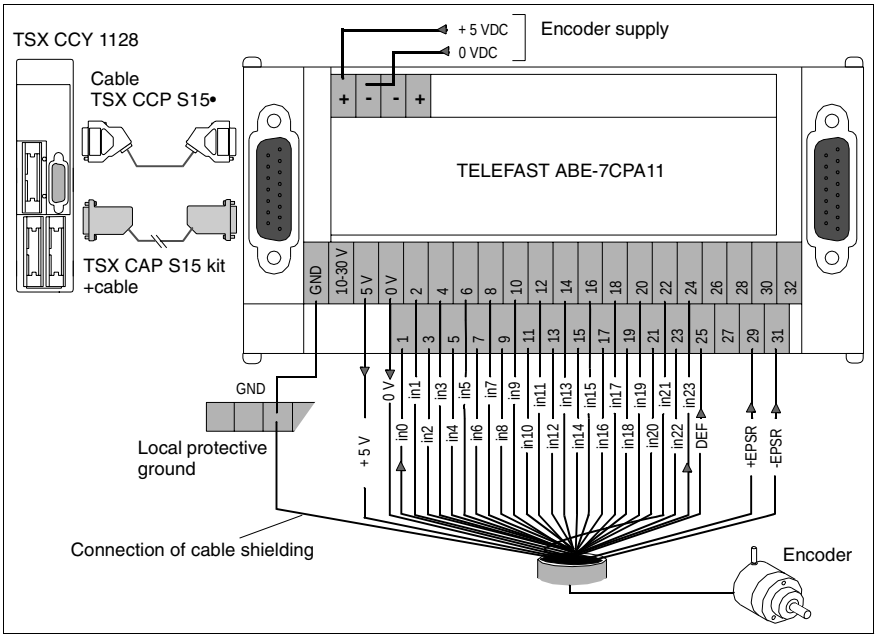

Functions of the TELEFAST screw terminal block

The TELEFAST base has two terminal blocks:
One located on the upper part, comprising four terminals and used to connect the supply source to the encoder,

Terminals on the screw terminal blocks	Signals	Functions
+	-	+ inputs, source of encoder supply
-	-	- inputs, source of encoder supply

Two terminal blocks comprising 36 terminals are located on the lower part. These are used to connect all signals travelling to or from the encoder.

Terminals on the screw terminal blocks	Signals	Functions
GND	-	Connection to TELEFAST protective ground. Ensures the continuity of the ground connection between the encoder and the module
+10..30 V	-	Connecting the + encoder supply for an encoder using a 10…30 VDC supply
+5 V	-	Connecting the + encoder supply for an encoder using a 5 VDC supply
0 V	-	Connecting the - encoder supply
1 to 24	In0 to In24	Parallel outputs of the encoder
25	ERR	Default output of the encoder
29	+ EPSR	+ return supply of the encoder. If there is no return encoder supply, connect the terminal to the +10…30 V or +5 V terminal according to the encoder supply
30	- EPSR	- return supply of the encoder. - return supply of the encoder. If there is no return encoder supply, connect the terminal to the 0 V terminal

Wiring rules and precautions specific to the TELEFAST

Connecting or disconnecting the TELEFAST

You should always connect or disconnect the TELEFAST's connectors and various connection wires when the voltage is SWITCHED OFF:

- connecting or disconnecting the cable connectors linking the module and the TELEFAST connector,
- connecting or disconnecting the wires linking the TELEFAST connector to the encoder.

Length of the connection cable between the module and the TELEFAST

The table below gives the clock frequency of the transmission series according to the distance.

If	then
cable length < to 10 meters	frequency of the transmission series clock: 1 MHz
cable length < to 20 meters	frequency of the transmission series clock: 750 kHz
cable length < to 50 meters	frequency of the transmission series clock: 500 kHz
cable length < to 100 meters	frequency of the transmission series clock: 375 kHz
cable length < to 150 meters	frequency of the transmission series clock: 200 kHz
cable length < to 200 meters	frequency of the transmission series clock: 150 kHz

Cross-section of the wire connecting the module and the TELEFAST

In order to reduce the on-line voltage falls as much as possible, please respect the following points:

If	And	Then
The encoder is using a 5VDC supply	The distance from the module to the TELEFAST is < 100m	Use a wire with minimum cross-section 0.08 mm (gage 28)
	The distance from the module to the TELEFAST is > 100m	Use a wire with minimum cross-section 0.34 mm (gage 22)

Connecting the encoder supply

In order to limit voltage falls with a 0V, caused by the encoder supply current, we recommend that you wire the 0V as follows:

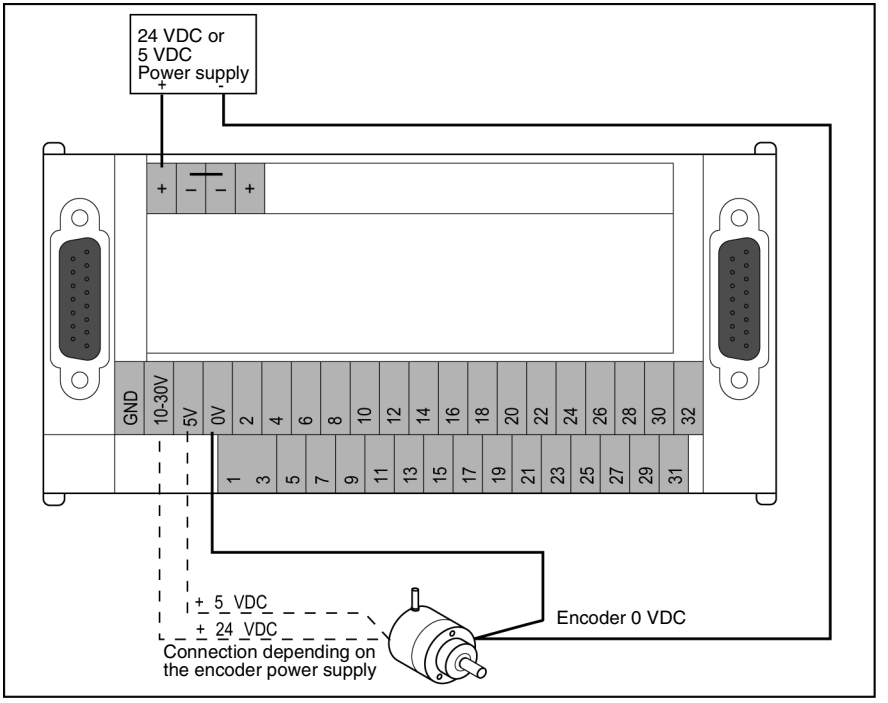

Wiring the encoder outputs on the TELEFAST

If the encoder outputs have positive or negative logic with a number lower than 24, use the following connection procedure:

If	And	Then
the encoder outputs have positive logic	their number is lower than 24	• wire the encoder outputs to the TELEFAST inputs, working from the least significant to the most significant • wire the unused TELEFAST inputs to the 0V terminal

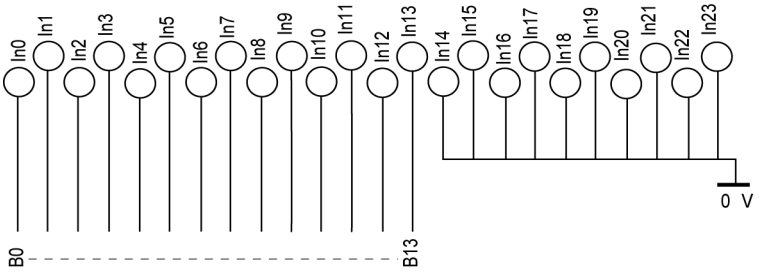

Example: 14-bit encoder

If	And	Then
the encoder outputs have negative Logic	their number is lower than 24	• wire the encoder outputs to the TELEFAST inputs, working from the least significant to the most significant • do not wire (leave free) the unused TELEFAST inputs.

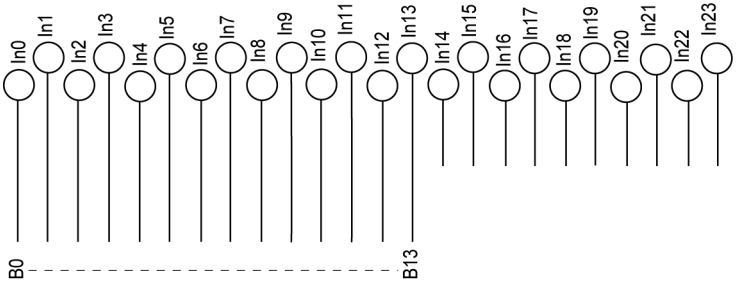

Example: 14-bit encoder

Protecting the encoder supply

According to the encoder supply voltage, the supply should be protected as follows:

If	Then
The encoder supply voltage is 10…30VDC	The protective fuse is built into the TELEFAST: ● size: 1A ● type: fast-blow fusion.
The encoder supply voltage is 5VDC	Provide a series fuse (Fu) for the positive supply: ● calibre: to be determined by the user, dependent upon the TELEFAST and encoder consumption ● type: fast-blow fusion 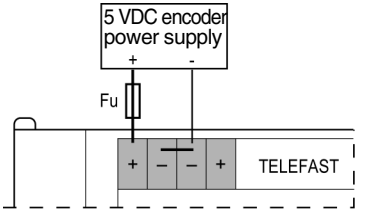

Monitoring the encoder supply

If the encoder supply voltage decreases by more than 15%, the default (EPSR signal) is sent back to the module. If the encoder does not have a return supply, do the following:

If	Then
No return encoder supply	Connect the positive and negative EPSR of the TELEFAST: ● the positive EPSR terminal of the TELEFAST to the positive terminal of the encoder supply ● the negative EPSR terminal of the TELEFAST to the negative terminal of the encoder supply

Configuration of the TELEFAST connector

At a Glance

The connector is configured by setting the 4 micro-switches located under the SUB D 15-pin connector to the right of this. For the TSX CCY 1128 module, the configuration is limited according to the type of connected encoder.
The diagram below shows the location and function of the 4 micro-switches.

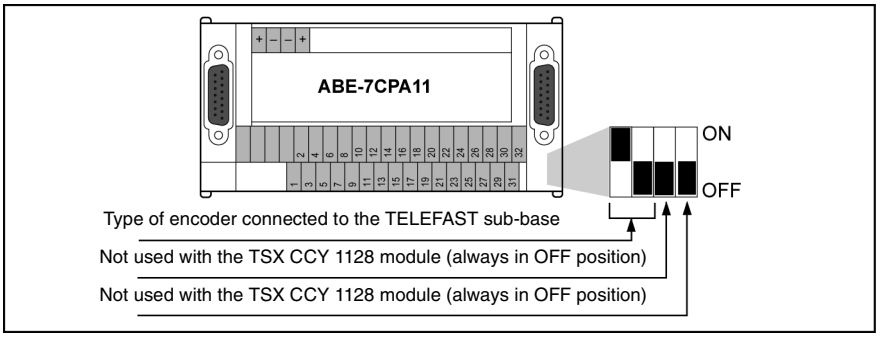

The two micro-switches located on the right must always be in the OFF position. The two micro-switches on the left allow the link performance to be set according to the encoder output characteristics, and dependent upon the distance between the TELEFAST and the encoder.

Positions of the micro-switches: encoder with positive Logic outputs

Encoder with positive Logic outputs, coded GRAY

Type of encoder output			position of the micro-switch	Maximum length encoder/ TELEFAST	Max. frequency for changing least significant bit
Logic	Output interface	Code			
Positive	• Totem Pole • TTL • NPN open collector	Gray		50 meters	75 kHz

Positions of the micro-switches: encoder with negative Logic outputs

Encoder with negative Logic outputs, coded GRAY

Type of encoder output			position of the micro-switch	Maximum length encoder/ TELEFAST	Max. frequency for changing least significant bit
Logic	**Output interface**	**Code**			
Negative	Totem Pole	Gray		50 meters	75 kHz
	TTL		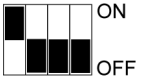	100 meters	40 kHz
	NPN open collector			200 meters	5 kHz

Positions of the micro-switches: encoder with positive or negative Logic outputs,

Encoder with positive or negative logic outputs, Binary code

Type of encoder output			Positions of the micro-switches	Maximum length encoder/ TELEFAST	Max. frequency for changing least significant bit
Logic	**Output interface**	**Code**			
Positive or negative	Totem Pole	Binary		10 meters	40 kHz
	TTL		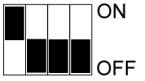	30 meters	20 kHz
	NPN open collector		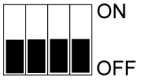	50 meters	5 kHz

SERCOS® TSX CSY 84 / 164 Modules

V

At a Glance

Subject of this Part

This part presents the SERCOS® TSX CSY 84 / 164 modules, their operating features and their installation.

What's in this Part?

This part contains the following chapters:

Chapter	Chapter Name	Page
19	Presentation of the TSX CSY 84 / 164 modules	357
20	Installing the modules	363
21	Description of the multi-axis control system	375
22	Fiber optic cables	383
23	Characteristics, Standards and service conditions	387
24	Compatible variable speed controllers	391

Presentation of the TSX CSY 84 / 164 modules

19

At a Glance

Subject of this Chapter

This chapter presents the TSX CSY 84 and TSX CSY 164 multi-axis control modules.

What's in this Chapter?

This chapter contains the following topics:

Topic	Page
Presentation of the modules in their environment	358
Physical presentation of the modules	360
Compatibility with the installed base	362

Presentation of the modules in their environment

Introduction

TSX CSY 84 / 164 modules are double format application-specific modules from the Premium range. They fit on a TSX RKY•• rack of a TSX/PCX 57 PLC station. They are one of the components of the SERCOS® range on Premium PLCs, and are used to create a multi-axis control system.

Presentation of the components of the SERCOS® range on Premium PLCs

The SERCOS® range on Premium PLCs is composed of the following elements:

- a TSX/PCX 57 PLC station composed of:
  - one or more racks,
  - power supply modules,
  - a CPU,
  - the various modules necessary for the application.
- one or more TSX CSY 84 / 164 multi-axis control modules, each of which can be used to drive up to 8 variable speed controllers spread out over a SERCOS® network.
- a range of LEXIUM MHD• (See *List of variable speed controllers, p. 391*) variable speed controllers,
- motors associated with these variable speed controllers,
- plastic fiber optic cables ranging between 0.3 m to 16.5 m in length:
  - which provide the physical connection between the module/controller and the controller/controller in a ring network structure,
  - which act as a support for the digital link between the TSX CSY 84 / 164 modules (master) and the variable controllers (slaves), a digital link that is defined by the European standard EN61491.
- a PL7 Junior/Pro software which is used to configure the TSX CSY 84 / 164 modules and program the movement application,
- a UniLink LXM 17 software application, used to set up the variable speed controllers.

Installation diagram

The figure below shows an example of the installation of a SERCOS® multi-axis control module with the TSX CSY 164 module.

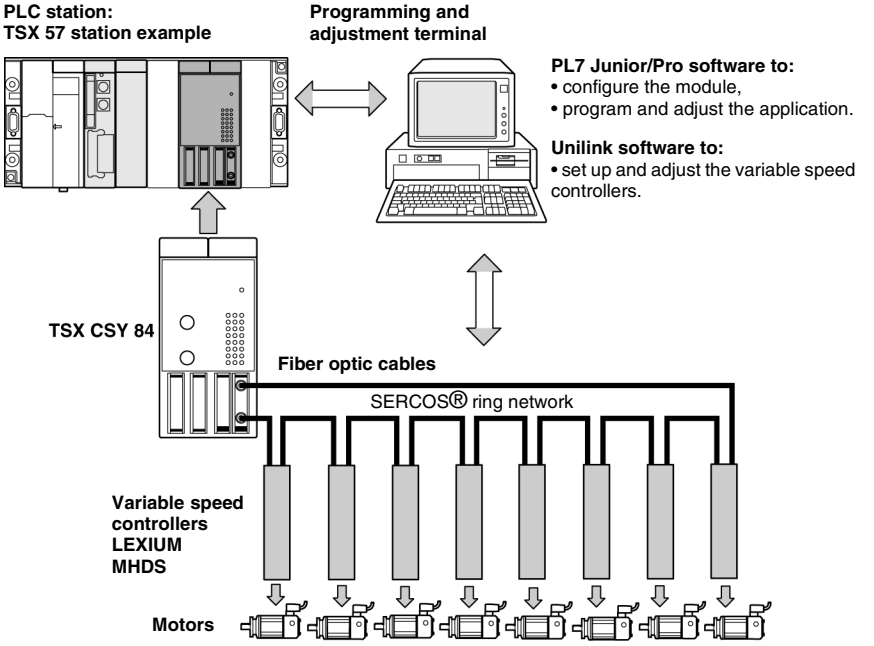

Physical presentation of the modules

Description of the front panel

The following can be found on the front panel of the modules:

- a display block comprising 6 LEDs for viewing and diagnosing the module status,
- a group of 24 LEDs for viewing and diagnosing the various module channels,
- two connectors for connecting the fiber optic cables which make up the link between the module and variable speed controllers,
- two 8-pin Mini DIN connectors.

Appearance of the module

The diagram below shows the TSX CSY 84 module and its various elements.

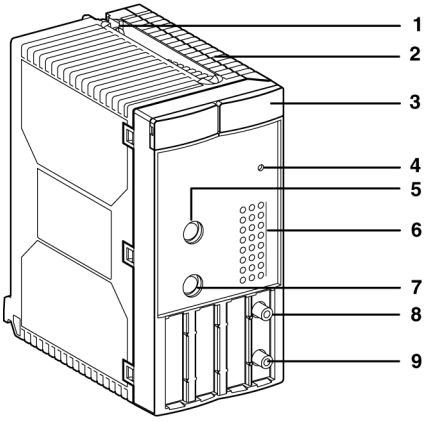

Elements and their functions

Number	Elements	Functions
1	Screw	Attaches the module to the TSX RKY •• rack
2	Module casing	Does the following: • Supports and protects the electronic boards, • Locks the module into its slot.
3	Display block comprising 6 LEDs: • green RUN LED • red ERR LED • red I/O LED • yellow SER LED • yellow COM LED • yellow INI LED	These enable the user to visualize the status and errors of the module. Indicates the operating mode of the module. Indicates an internal module error. Indicates an external module error or an application error. Indicates that traffic on the SERCOS® network is flowing correctly. Not significant Indicates that the module is in re-initialization phase.
4	Recessed button	Used to initialize the module.
5	COM2 8-pin Mini DIN connector	Reserved.
6	24 LED indicators	Used to visualize and diagnose the module channels.
7	COM1 8-pin Mini DIN connector	Reserved.
8	TX send SMA connector	Used to connect the send fiber optic cable of the SERCOS® ring network.
9	RX receive SMA connector.	Used to connect the receive fiber optic cable of the SERCOS® ring network.

Compatibility with the installed base

Hardware compatibility

In order to receive the TSX CSY 84 modules, the PLC station must be equipped with a processor running software version SV > 3.3.

Software compatibility

- To develop an application using the TSX CSY 84 modules, the PL7 Junior/Pro software must be version SV 3.4 + C functional complement or version SV > 3.4.
- For a TSX CSY 84 module, a program is compatible with a TSX CSY 164 module after reconfiguring the PL7 application.
- To develop an application using the TSX CSY 164 modules, the PL7 Junior/Pro software must be version SV 4.3 + Motion TSX CSY 164 Add-on or version SV ≥ 4.4.

Installing the modules

20

At a Glance

Subject of this Chapter

This chapter describes the installation operations for the TSX CSY 84 / 164 multi-axis control modules.

What's in this Chapter?

This chapter contains the following topics:

Topic	Page
Mounting the modules in a PLC station rack	364
Installing the modules in a PLC station	365
Number of application-specific channels managed by a TSX CSY 84 or CSY 164 station	366
Installation precautions	367
Module displays	368
Initialization of the module after an internal error	372
Operating mode of the TSX CSY 84/164 modules	373

Mounting the modules in a PLC station rack

Introduction

The TSX CSY 84 / 164 modules can be mounted into all the available slots of a TSX RKY •• rack of a TSX 57/PMX 57/PCX 57 PLC station, with the exception of the slots dedicated to the supply and processor modules. This double format module takes up 2 slots on a TSX RKY •• rack.

Illustration

The diagrams below show the procedure for mounting a standard format module from the Premium range into the TSX RKY •• rack. The procedure is identical for a double format module.

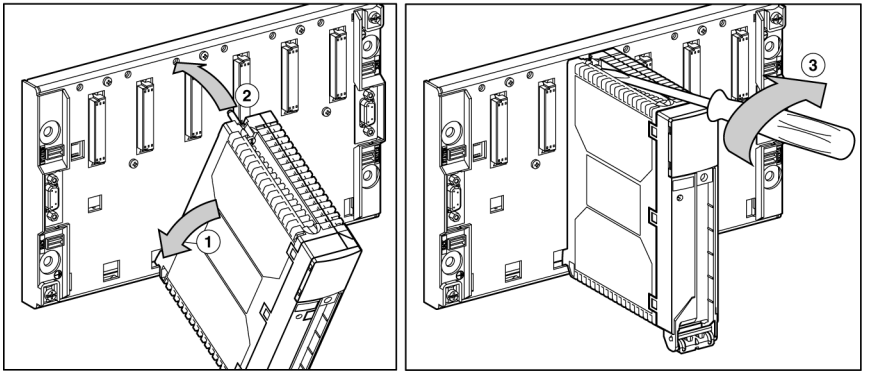

Procedure

The table below describes the procedures.

Steps	Actions
1	Insert the pins at the back of the module into the centering holes located on the lower part of the rack.
2	Twist the module to bring it into contact with the rack.
3	Attach the module to the rack by tightening the screw located on the upper part of the module. Maximum tightening torque of the screw: 2.0 Nm

Installing the modules in a PLC station

Introduction

The TSX CSY 84 / 164 modules can be installed in all the racks located on the main X bus segment of a PLC station.

Installing the module

The diagram below represents the installation of a TSX CSY module in a rack belonging to the main X bus segment. The module can be installed in the rack supporting the processor and in all other racks present on the X bus. The distance between the rack supporting the TSX CSY module and the rack supporting the processor must not exceed 100 meters.

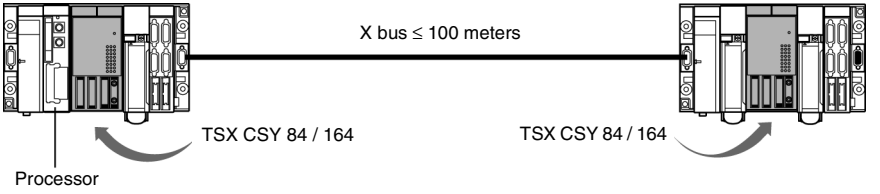

Note: The TSX CSY 84 / 164 modules cannot be installed in a rack belonging to a remote X bus segment by a TSX REY 200 module.

Number of application-specific channels managed by a TSX CSY 84 or CSY 164 station

Definition of an application-specific channel

An application-specific module (TSX CTY• counting modules, TSX CAY• axis command modules, TSX CFY• step by step command modules, TSX YSP Y• weighing modules, TSX CCY 1128 electronic cam modules, TSX CSY 84 movement control modules, TSX CSY 164, etc.) is equipped with a number of channels, varying from 1 to n according to the module type (see); these channels are called application-specific channels.

Reasons for counting the number of application-specific channels in a station

To determine:
- the power of the CPU to be installed
- the maximum number of application-specific modules that can be installed in the station.

Number of application-specific channels for a TSX CSY 84 module

A TSX CSY 84 module can comprise up to 32 application-specific channels.
Only configured application-specific modules should be taken into account.

The TSX CSY 84 module manages up to 8 real axes (channels 1 to 8), which are associated with variable speed controllers. In addition to these real axes, the module can manage:
- 4 imaginary axes (channels 9 to 12),
- 4 external measurement axes (channels 13 to 16),
- 4 coordinated sets of axes (channels 17 to 20),
- 4 follower sets of axes (channels 21 to 24),
- 7 cam profiles (channels 25 to 31).

Channel 0 (SERCOS® channel) manages the digital bus,

Number of application-specific channels for a TSX CSY 164 module

- Channels 1 to 16 support real axis functions, imaginary axis functions, and external setpoints,
- 4 coordinated sets of axes (channels 17 to 20),
- 4 follower sets of axes (channels 21 to 24),
- 7 cam profiles (channels 25 to 31).

Channel 0 (SERCOS® channel) manages the digital bus,

Installation precautions

Introduction

In order to guarantee optimum operating conditions, it is necessary to take certain precautions when installing and removing a module, plugging and unplugging connectors to and from the front panel of the module, and adjusting its fixing screws.

Installing and removing a module

Installing and removing a module should be down with the power off. However, a module can be installed or removed without cutting the rack's power and without any risk of damaging the module.

Screwing in and unscrewing the fiber optic connectors on the front panel of the module

It is possible to screw in and unscrew the fiber optic connectors on the front panel of the module with the module powered up without any risk of damaging it.

In order to avoid malfunction of the application, these operations should preferably be carried out with the power supply off.

Tightening torque of the module's fixing screw

Tightening torque: 2.0 Nm.

Module displays

Role

The TSX CSY 84 or TSX CSY 164 module is equipped with two display units:

- A display block in standard Premium composed of 6 LEDs, whose function is to inform the user of:
  - the operating mode of the module: module operation normal, in error or switched off,
  - internal or external module operating errors.
- A set of 24 LEDs for displaying the status of the application-specific channels of the module (real axes, imaginary axes, etc.).

Presentation of the display block

The diagram below shows the physical appearance of the module's display block and the location of its six LEDs.

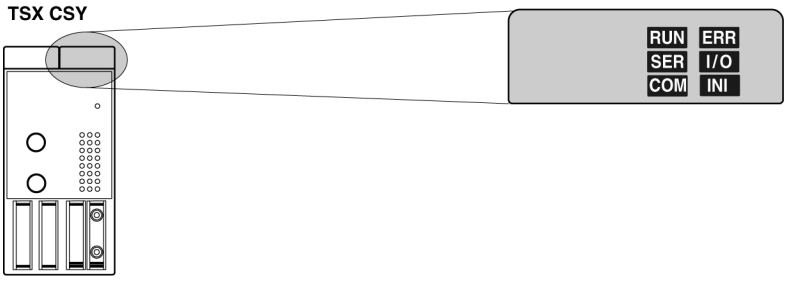

Statuses of the various display block LEDs and their meaning

The following tables show the different statuses for each LED on the display block and their meaning.

LED	Color	Status	Meaning
RUN	Green	On	Module in normal operating mode
		Off	Module in error, powered down, in initialization phase or application missing
ERR	Red	On	Internal module error: • module has broken down.
		Blinking	• Start-up of the module, • Communication error, • Application missing, invalid or execution error.
		Off	Operating normally, no faults
I/O	Red	On	External module error: • Cabling error
		Blinking	Not significant
		Off	Operating normally, no faults
INI	Yellow	On	Not significant
		Blinking	The module is in Reset phase
		Off	Operating normally
SER	Yellow	On	Not significant
		Blinking	Traffic on the SERCOS® network in normal operating mode
		Off	No traffic on the SERCOS® network
COM	Yellow	-	Unused

Presentation of the display LEDs of the application-specific channels

The diagram below shows the physical characteristics of the 24 display LEDs for certain application-specific channels.

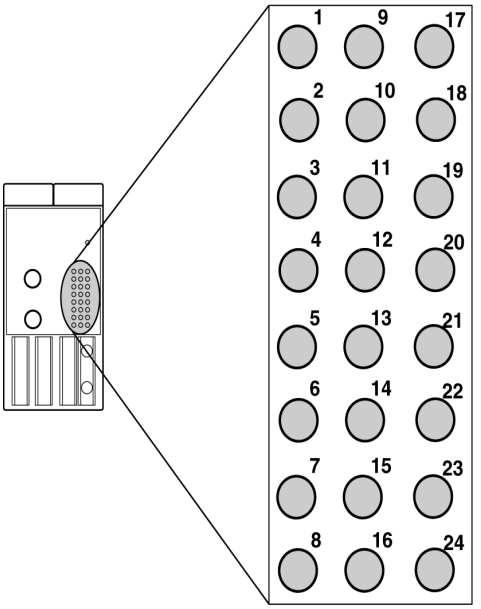

TSX CSY 84

LEDs 1 to 8: display of the 8 imaginary axes

LEDs 9 to 12: display of the 4 imaginary axes

LEDs 13 to 16: display of the 4 external measurement axes

LEDs 17 to 20: display of the 4 coordinated sets of axes

LEDs 21 to 24: display of the 4 follower sets of axes

TSX CSY164

LEDs 1 to 16: display of independent axes (real and imaginary axes, and external setpoint)

LEDs 17 to 20: display of the 4 coordinated sets of axes

LEDs 21 to 24: display of the 4 follower sets of axes

Statuses and meanings of the application-specific channel display LEDs

The table below shows the different statuses of the application-specific channel display LEDs:

LEDs	CSY 84 Assignment	CSY 164 Assignment	Statuses	Meanings
1 Real axis 1 **2** Real axis 2 **3** Real axis 3 **4** Real axis 4 **5** Real axis 5 **6** Real axis 6 **7** Real axis 7 **8** Real axis 8		either real axis, imaginary axis, external setpoint	On	Axis in normal operating mode
9 Imaginary axis 1 **10** Imaginary axis 2 **11** Imaginary axis 3 **12** Imaginary axis 4			Blinking	Axis in configuration mode or in error
13 External setpoint 1 **14** External setpoint 2 **15** External setpoint 3 **16** External setpoint 4				
17 Coordinated set of axes 1 **18** Coordinated set of axes 2 **19** Coordinated set of axes 3 **20** Coordinated set of axes 4			Off	Axis not configured or configuration error
21 Follower set of axes 1 **22** Follower set of axes 2 **23** Follower set of axes 3 **24** Follower set of axes 4				

Initialization of the module after an internal error

How to initialize the module

The module is initialized by using the recessed button on the front panel, as indicated in the following diagram.

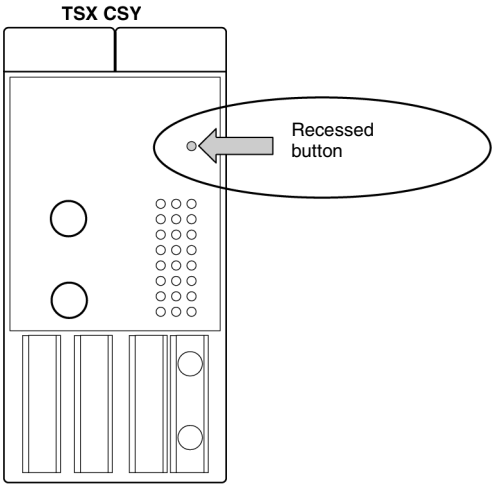

Note: Recommendations for using the recessed button:
- Apply pressure gently to the button,
- The tip of the tool should be kept perpendicular to the front panel of the module and centered in the access window.

Failure to observe this may result in damage to the recessed button.

Consequence of initialization

The module starts up again in initialization phase, as when powering up. See *Diagram of the operating mode , p. 373*.

Operating mode of the TSX CSY 84/164 modules

Diagram of the operating mode

The following diagram describes the different stages of the operating mode and, for each stage, gives the status of the LEDs on the front panel.

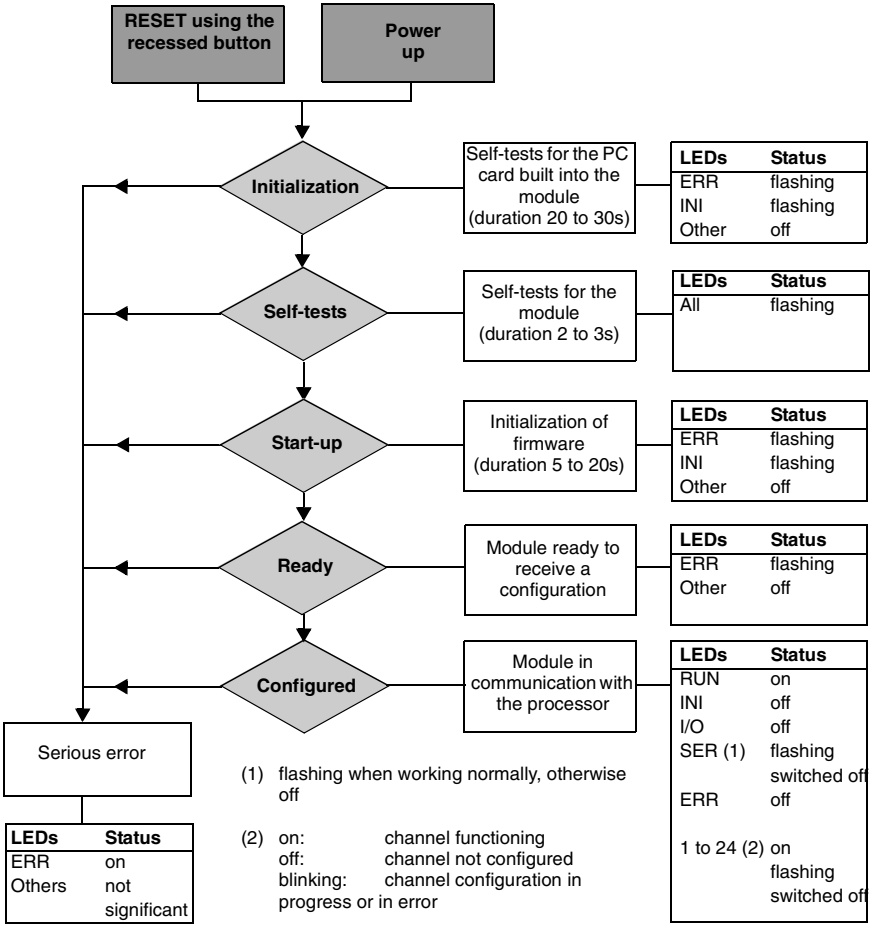

Description of the multi-axis control system

21

At a Glance

Subject of this Chapter

This chapter describes how the TSX CSY 84 and TSX CSY 164 modules interface with the variable speed controllers in a SERCOS® network configuration to form a multi-axis control.

What's in this Chapter?

This chapter contains the following topics:

Topic	Page
SERCOS® multi-axis control system on Premium PLCs	376
SERCOS® ring network	378

SERCOS® multi-axis control system on Premium PLCs

Architecture of a SERCOS® multi-axis control system

The architecture of a SERCOS® multi-axis control system on Premium PLCs comprises:

- a TSX/PCX 57 PLC station,
- a TSX CSY 84 or TSX CSY 164 multi-axis control module,
- variable speed controllers that control the motors associated with the different axes,
- a SERCOS® fiber optic network.

Illustration

The following diagram shows an example of the architecture of a SERCOS® multi-axis control system.

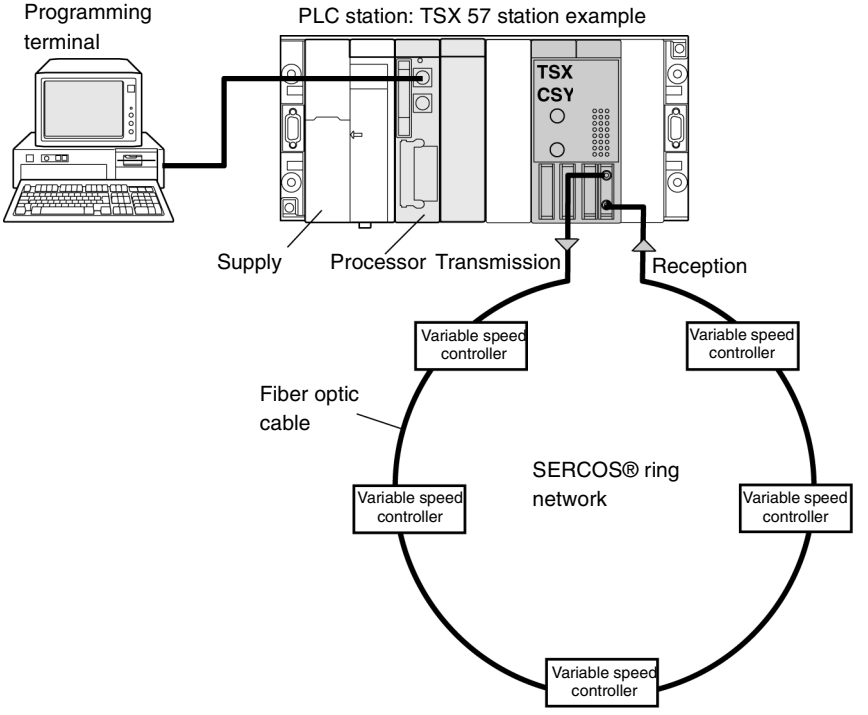

Operating principle

The TSX CSY 84 or TSX CSY 164 multi-axis control modules and variable speed controllers are connected to the network through fiber optic cables to form the multi-axis control system.
The variable controllers interconnected to the fiber optic network act as individual axes.
The movement control instructions transmitted by the TSX CSY 84 module are sent to each variable controller on the network and, in return, the module receives from the network the real position values of each axis.

Maximum number of real axes managed by a TSX CSY 84 module

A TSX CSY 84 module manages up to 8 real axes, which are in turn associated with variable speed controllers.
In addition to these real axes, the module can manage:
- 4 imaginary axes,
- 4 external measurement axes,
- 4 coordinated sets of axes,
- 4 follower sets of axes,
- 7 cam profiles.

Number of application-specific channels for a TSX CSY 164 module

- Channels 1 to 16 support real axis functions, imaginary axis functions, and external setpoints,
- 4 coordinated sets of axes (channels 17 to 20),
- 4 follower sets of axes (channels 21 to 24),
- 7 cam profiles (channels 25 to 31).

Development of the application

The application is developed from a terminal (PC) equipped with the PL7 Junior/Pro software that is used to:
- configure the axes,
- perform commissioning,
- adjust the application and run diagnostics.

(See).

SERCOS® ring network

At a Glance

By way of the SERCOS® ring structure fiber optic network, the TSX CSY 84/164 modules:

- transmits to each axis the movement control instructions defined by the application program,
- receives in return, by way of the variable speed controllers, the real data transmitted by the various position sensors of the axes.

SERCOS® ring network

Note: Mounting procedures for the TSX CSY 164 module are the same as for the TSX CSY 84 module.

The diagram below shows an example of a SERCOS® network configuration composed of 5 LEXIUM variable speed controllers, interconnected by way of fiber optic cables to a TSX CSY 84 module.

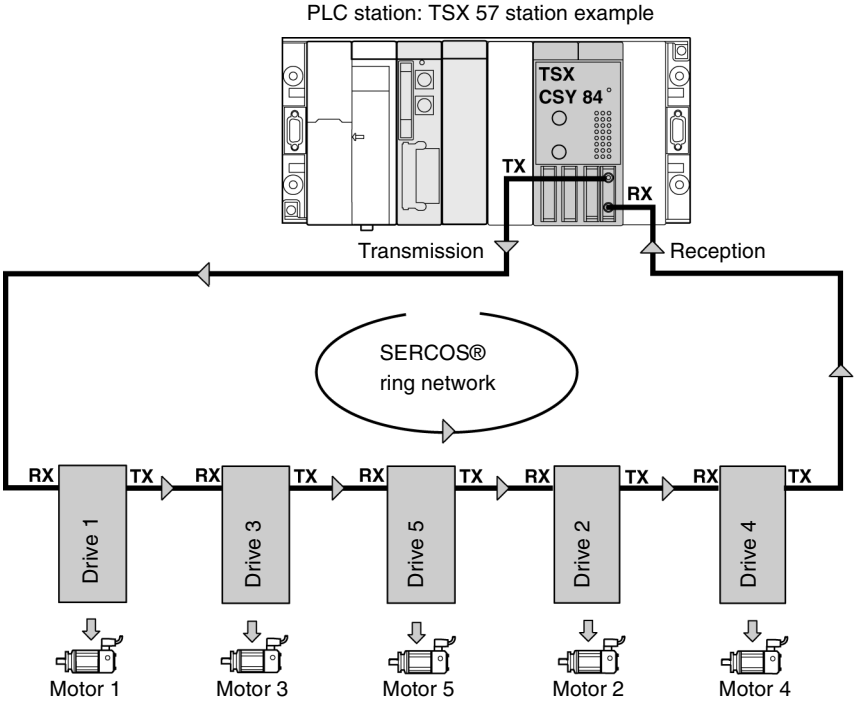

Sending commands and receiving data

The module coordinates the movements of the different axes installed in the network:

- it transmits through the network and to the variable speed controllers the movement control instructions of the various axes,
- it receives through the network the current data for each axis and executes on the basis of this data the necessary processes.

From the connector (TX) and by way of the fiber optic cable, the module sends movement instructions to the first variable speed controller, which interprets and executes them. These instructions are then sent to the next variable speed controller.

The last variable speed controller in the ring sends the current data for all the axes to the module connector (RX) by means of the fiber optic cable.

Note: a powered down variable speed controller in the SERCOS® network causes the ring to open, consequently creating a system error.

Cycle time

Data is transmitted on the network in a single direction, with a typical cycle time of 4 ms. This can be reduced to 2 ms in configuration mode if permitted by the volume of data exchanged.
(See).

Transmission speed

The transmission speed is set by default to 4 Mbauds. If the variable speed controllers cannot support this speed, it may be reduced to 2 Mbauds in configuration mode.
(See).

Maximum length of the different network segments

The maximum length of each segment of the SERCOS® network is limited to 40 meters, using the plastic fiber optic cables specified by Schneider Automation.

Illustration of the various segments

The various segments of the SERCOS® network:

- TSX CSY 84 module / variable speed controller: segment 1
- Variable control / variable control: segment 2 to n
- Variable control / module: segment n+1

The diagram below shows the various segments of a SERCOS® network, to which 5 variable speed controllers have been connected.

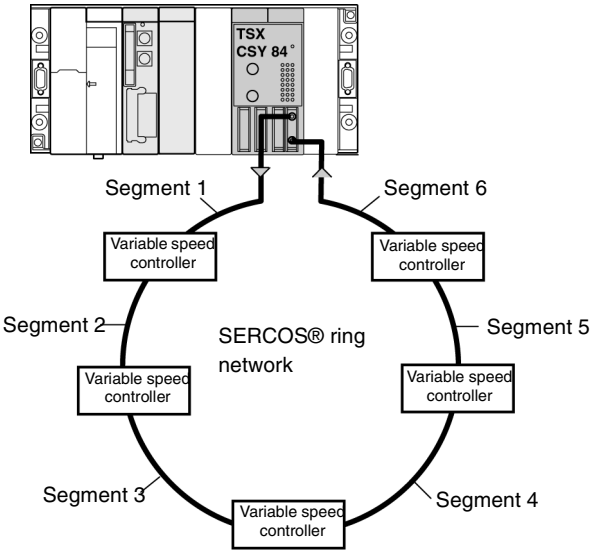

Adjusting the optical strength of the transmitter according to the segment length

Each component of the SERCOS® network (TSX CSY 84 module and variable speed controllers) is equipped with an optical transmitter.

For each optical transmitter, the operator must adjust the optical power of the transmitter according to the segment length.

- Optical power of segment 1 (module / first variable speed controller): this is always provided by the optical transmitter of the TSX CSY 84 module. Optical power is adjusted in configuration mode using the PL7 Junior / Pro software by setting a percentage of the optical power in accordance with the segment length. (See).

Segment length (in meters)	Optical power (as a percentage of total power)
0 < L < 15	66%
15 < L < 40	100%

- Optical power of the other segments (variable controller/variable controller and last variable controller/module): this is always provided by the optical transmitter of the variable controller.
  Optical power is adjusted using the UniLink software by setting the segment length only.

Fiber optic cables

22

At a Glance

Subject of this Chapter

This chapter presents the fiber optic cables for connecting the various components of the SERCOS® network (TSX CSY 84 / 164 modules and variable speed controllers).

What's in this Chapter?

This chapter contains the following topics:

Topic	Page
Pre-assembled fiber optic cables	384
Kits for creating custom fiber optic cables	385

Pre-assembled fiber optic cables

At a Glance

Schneider Automation offers a range of 1 mm diameter plastic fiber optic cables for connecting the different components of the SERCOS® network (TSX CSY 84 / 164 modules and variable speed controllers). Each cable is equipped at each end with an SMA type connector.

List of cables

The table below provides the reference and length of each cable.

References	Lengths
990 MCO 00001	0.3 meters
990 MCO 00003	0.9 meters
990 MCO 00005	1.5 meters
990 MCO 00015	4.5 meters
990 MCO 00055	16.5 meters
990 MCO 00075	22.5 meters
990 MCO 000125	37.5 meters

Recommen-dations

When installing fiber optic cables, it is necessary to comply with the following recommendations:

Note: Recommendations concerning the curve radius of the cables.
For this type of cable, the minimum curve radius must be greater than 25 mm.
Failure to observe this may result in damage to the cables.

Note: Recommendation concerning the tension applied to the cables on installation.
The maximum tension applied to the cables on installation must not exceed 6 Kg.
Failure to observe this may result in damage to the cables.

Maximum permitted temperature: -40°C+80°C.

Kits for creating custom fiber optic cables

At a Glance

Schneider Automation offers two kits for creating custom cables:
- 1 tool kit,
- 1 equipment kit comprising a cable and connectors.

Tool kit

The table below provides the reference and the contents of the tool kit.

Reference	Contents	
	Quantity	**Description**
990 MCO KIT 00	1	Service instructions for creating a cable
	1	Cable stripping tool
	1	Connector clip pliers
	1	25 W / 110 V soldering iron

Equipment kit

The table below provides the reference and the contents of the equipment kit.

Reference	Contents	
	Quantity	**Description**
990 MCO KIT 01	12	SMA type connectors
	12	Insulation sleeves
	1	30-meter plastic fiber optic cable

Characteristics, Standards and service conditions

23

At a Glance

Subject of this Chapter

This chapter presents the different characteristics of the TSX CSY 84 module and the SERCOS® network.

What's in this Chapter?

This chapter contains the following topics:

Topic	Page
Characteristics of the module	388
Characteristics of the SERCOS® network	389
Standards and service conditions	390

Characteristics of the module

Electrical characteristics

The following table gives the electrical characteristics of the module.

Description of the parameters	Values	
	Typical	Maximum
Current consumed by the module from the 5V of the rack power supply	1.8 A	2 A
Power dissipated in the module	9 W	10 W
Fiber optic outputs	Complies with standard EN 61491	

Operating and storage temperature/ hygrometry/ altitude

The following table gives the electrical characteristics of the module.

Description of the parameters	Values
Operating temperature	0 to 60°C
Storage temperature	-25°C to 70°C
Hygrometry (without condensation)	5% to 95%
Operating altitude	0 to 2000 m

Characteristics of the SERCOS® network

Table of characteristics

The following table gives the main characteristics of the SERCOS® network.

Description of the parameters	Values
Addresses	1...254
Baud rate	2 or 4 Mbauds, configurable by software
Cycle time	4 ms

Standards and service conditions

Standards	Identical standards to those applied to Premium PLCs (see). **Standard EN 61491:** Electrical equipment of industrial machinery. Serial data link for real-time communication between control units and drive devices.
Service conditions and recommen-dations linked to the environment	These are identical to those applied to Premium PLCs (see).

Compatible variable speed controllers

24

List of variable speed controllers

List of variable controllers in the Schneider Electric range

Schneider Electric offers a range of variable speed controllers that are compatible with the SERCOS® range on Premium PLCs. The table below provides the reference and description of each variable speed controller.

Reference	Description
MHD• 1004 •00	LEXIUM variable speed controller, continuous current of 1.5 A rms
MHD• 1008 •00	LEXIUM variable speed controller, continuous current of 3 A rms
MHD• 1017 •00	LEXIUM variable speed controller, continuous current of 6 A rms
MHD• 1028 •00	LEXIUM variable speed controller, continuous current of 10 A rms
MHD• 1056 •00	LEXIUM variable speed controller, continuous current of 20 A rms
MHD• 1112 •00	LEXIUM variable speed controller, continuous current of 40 A rms
MHD• 1198 •00	LEXIUM variable speed controller, continuous current of 70 A rms

Other variable speed controllers

All EN 61491-compliant variable speed controllers may be used with the TSX CSY 84/164 modules.

Index



Numerics

12 pin connectors, 185
15-pin SUB-D connector, 63, 66
20-pin HE10 connector, 72

A

Accessories, 183
Auxiliary input characteristics, 59
Auxiliary output characteristics, 61
Availability of counting signals, 101, 104
Availability of signals on TELEFAST, 195, 251

C

Caractéristiques TELEFAST 2
    ABE-7CPA11, 108
Choice of encoders, 161
Compatibility, 221
Compatibility of translators, 266
Connecting
    absolute encoder via TELEFAST ABE-7CPA11, 189
    absolute SSI encoder, 179
    counting signals on the TSX CAY, 175
    encoder /TSX CTY 2A/4A/2C, 81
    encoder count sensor, 80
    encoder supply, 180
    encoder with TSX TAP S15 05, 137
    encoder with TSX TAP S15 24, 138
    encoders with 10...30 V supply, 113
    encoders with 5 V supply, 115
    incremental encoder, 178
    proximity sensor, 75
    sensors onto auxiliary I/O, 91
    sensors/supply, 76, 93
    TELEFAST 2
        ABE-7CPA01, 99
        ABE-7CPA11, 111
    the variable speed controller using the TAP MAS device, 173
    to a NUM MDLA variable speed controller, 190
Connection
    I/O channel 0, 246
    of terminals with the TELEFAST pre-wiring system, 169
    Phytron translator with TSX CFY 11/21 modules, 267
    TSX CFY to a translator, 240, 241
    TSX CFY with TELEFAST system, 250
    using a TSX CDP 301 / 501 pre-wired strand, 248
    using the TELEFAST pre-wiring system,

205
using TSX CDP 301 or 501 strips, 199
using TSX CDP 611 strips, 168
Count sensor supply monitor characteristics, 58
Counter input characteristics, 53, 55
Counting module characteristics, 52, 54, 56
Counting module display, 141
Counting modules
down counting function, 24
up counting function, 25
up/down counting and measurement functions, 27
up/down counting function, 26

E

EPSR connection, 45

H

HE10 20-pin connector, 69

I

IA, IB and IZ compatibility, 57

M

Monitoring, 217
Mounting and measurements of the TSX TAP S15 05/24, 135

O

Overview of the TSX TAP 15•• wiring accessories, 134

P

Pre-wired strands and cable, 139

R

Rules and precautions for wiring, 126
Rules for implementation, 94

S

Signal labeling, 203, 238, 243

T

TAP MAS connection device, 172
TELEFAST 2
ABE-7CPA11, 106, 107
ABE-7H16R20, 103
TELEFAST configuration, 129
TELEFAST/15 pin SUB-D correspondence, 102
TELEFAST/HE10 correspondence, 105, 197, 206, 252
TELEFAST/SUB-D correspondence, 171
TSC CFY
characteristics of translator inputs, 258
TSX CAY
analog output characteristics, 209
characteristics of auxiliary inputs, 213
characteristics of the counting inputs, 210
characteristics of the Q0 reflex outputs, 215
characteristics of the relay outputs, 220
characteristics of the variable speed controller inputs, 218
connection using TSX CAP S9, 167
general characteristics, 208
general precautions for wiring, 160
installation, 159
signal labeling, 166
standard configuration, 158
TSX CAY module display, 163
TSX CAY modules
command processing, 153

TSX CFY
characteristics of auxiliary inputs, 260
characteristics of Q0 brake output, 262
characteristics of translator outputs, 259
general characteristics, 257
general precautions for wiring, 236
installation, 235
physical description, 228
Standard functions, 229
TSX CFY module
basic configuration, 234
TSX TAP S15 05 mounting and dimensions, 187

U

Up/down counting and measuring on the TSX CTY 2C, 40
Up/down counting on the TSX CTY 2A/4A, 29, 32

W

Wiring precautions, 78, 200, 253