XPSMF3DIO8801 Safety Remote I/O Module Hardware Manual

07/2007



a brand of Schneider Electric

Telemecanique

33003447.01

Table of Contents

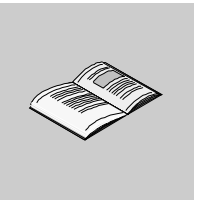

Safety Information 5

About the Book 7

Chapter 1 Overview: XPSMF3DIO8801 9

At a Glance 9
Introduction 10
Representation 10
Dimensions 11
Installation 13

Chapter 2 Application and Function 23

At a Glance 23
Initial Operation 24
Application 25
Function 26
Offline Proof-Test 40

Chapter 3 Equipment Description 41

At a Glance 41
Housing Elements 42
Reset Button 45
Communication 46
LEDs 50
Wiring 53
IP Addressing and System ID 55
SafeEthernet 56
Operating Conditions 61
Technical Characteristics 64
Additional Items 69

Appendices **71**
At a Glance 71

Appendix A **Connection Diagrams, Examples of Application, and Error Codes** **73**
At a Glance 73
Error Codes 74
Wiring Examples 78
Configuration of Ethernet Interfaces 81

Glossary **85**

Index **89**

Safety Information

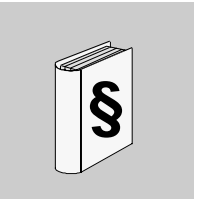

Important Information

NOTICE

Read these instructions carefully, and look at the equipment to become familiar with the device before trying to install, operate, or maintain it. The following special messages may appear throughout this documentation or on the equipment to warn of potential hazards or to call attention to information that clarifies or simplifies a procedure.



The addition of this symbol to a Danger or Warning safety label indicates that an electrical hazard exists, which will result in personal injury if the instructions are not followed.



This is the safety alert symbol. It is used to alert you to potential personal injury hazards. Obey all safety messages that follow this symbol to avoid possible injury or death.

⚠ DANGER

DANGER indicates an imminently hazardous situation, which, if not avoided, **will result** in death or serious injury.

⚠ WARNING

WARNING indicates a potentially hazardous situation, which, if not avoided, **can result** in death, serious injury, or equipment damage.

⚠ CAUTION

CAUTION indicates a potentially hazardous situation, which, if not avoided, **can result** in injury or equipment damage.

PLEASE NOTE

Electrical equipment should be installed, operated, serviced, and maintained only by qualified personnel. No responsibility is assumed by Schneider Electric for any consequences arising out of the use of this material.

© 2007 Schneider Electric. All Rights Reserved.

About the Book

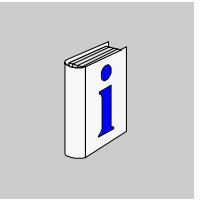

At a Glance

Document Scope

This manual describes the XPSMF3DIO8801 safety remote I/O.

The following descriptions of the XPSMF3DIO8801 are included in this manual:

- dimensions and installation
- application and function
- equipment description
- application examples

Validity Note

The XPSMF3DIO8801 safety remote I/O has been tested and certified by TÜV for functional safety in accordance with CE and the standards listed below:

- TÜV Anlagentechnik GmbH Automation, software, and information technology Am Grauen Stein 51105 Köln
- Certificate and test report No. 968/EZ 128.04/03 Safety-related automation devices
  HIMatrix F3DIO8801
- International standards:
  - IEC 61508, parts 1-7: 2000, up to SIL 3
  - EN 954-1: 1996, up to Category 4
  - EN 298: 1994
  - NFPA 8501:1997
  - NFPA 8502: 1999
  - EN 61131-2: 1994 and A11: 1996, A12: 2000
  - EN 61000-6-2: 2000, EN 50082-2: 1996, EN 50081-2: 1993
- National standards:
  - DIN V VDE 0801: 1990 and A1: 1994
  - DIN V 19250: 1994, up to RC6
  - DIN VDE 0116: 1989, prEN 50156-1: CDV 2000

The corresponding programming software is XPSMFWIN. The software is executable in the Microsoft Windows 2000/XP. The software helps the user to create safety-related programs and operate the Programmable Electronic System (PES).

Note: The declaration of conformity is provided within the hardware product's packaging. All devices are labelled with the CE sign.

Product Related Warnings

Schneider Electric assumes no responsibility for any errors that may appear in this document. If you have suggestions for improvements or amendments or have found errors in this publication, please notify us.

No part of this document may be reproduced in any form or by any means, electronic or mechanical, including photocopying, without express written permission of Schneider Electric.

All pertinent state, regional, and local safety regulations must be observed when installing and using this product. For reasons of safety and to ensure compliance with documented system data, only the manufacturer should perform repairs to components.

Failure to use Schneider Electric software or approved software with our hardware products may result in injury, harm, or improper operating results.

Failure to observe this product's safety-related warning can result in injury or equipment damage.

User Comments

We welcome your comments about this document. You can reach us by e-mail at techpub@schneider-electric.com

Overview: XPSMF3DIO8801

1

At a Glance

Overview

This chapter contains an overview of the XPSMF3DIO8801 remote I/O.

What's in this Chapter?

This chapter contains the following topics:

Topic	Page
Introduction	10
Representation	10
Dimensions	11
Installation	13

Introduction

XPSMF3DIO8801 Safety Remote I/O Device

XPSMF3DIO8801 is a safety remote input/output device which works with the XPSMF Safety PLC range and does not contain a user program. It is designed to monitor safety functions up to safety Category 4 according to EN 954-1 and SIL 3 according to IEC 61508 and is used to expand a Safety PLC. XPSMF3DIO8801 is a compact safety remote I/O device in a metal housing with 8 digital inputs, 8 digital DO+ outputs (L- reference pole), 2 digital DO- outputs (S+ reference pole), and 2 pulsed outputs.

The safety remote I/O is a highly visible product thanks to its red color housing. The product's overall ingress protection rating is IP 20. The XPSMF3DIO8801 is an extremely versatile product and can be used in all areas of a factory floor. In areas where conditions are harsh, explosive or generally dangerous, extra protection in the form of enclosures is available to optimize the product's performance, prolong its life, and improved safety within each factory environment. The XPSMF3DIO8801 is a very powerful safety remote I/O module and is very easy to program and install.

Representation

Front View

The following image shows the front view of the XPSMF3DIO8801 remote I/O module:

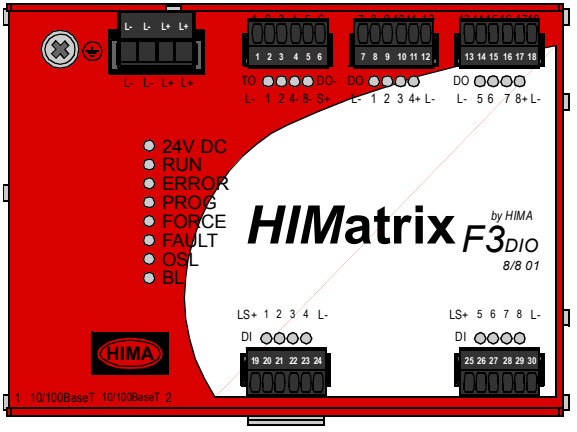

Dimensions

Overview

The following section contains information about the dimensions of the XPSMF3DIO8801 safety remote I/O module showing the front and side views.

Front View Dimensions

The following image shows the front view dimensions of the XPSMF3DIO8801 safety remote I/O module:

mm
inch

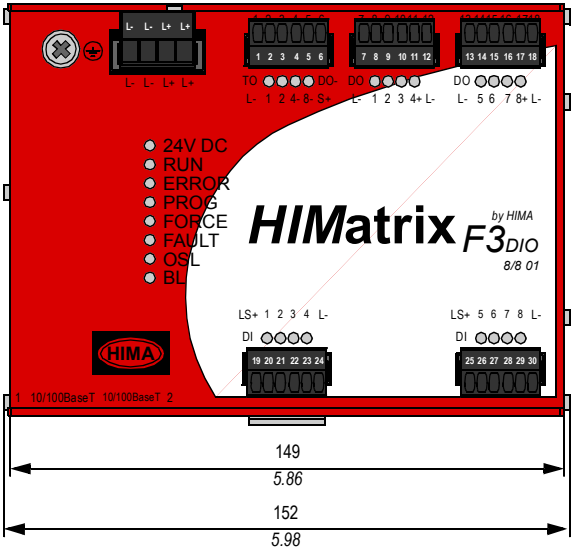

Side View Dimensions

The following image shows the side view dimensions of the XPSMF3DIO8801 safety remote I/O module:

mm
inch

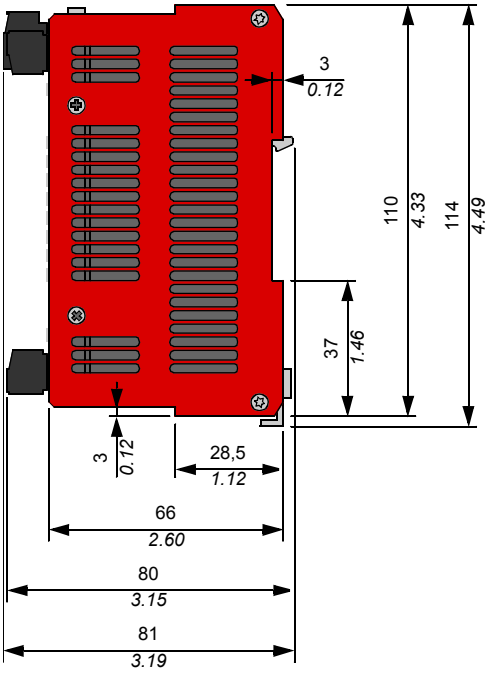

Installation

Introduction

The XPSMF3DIO8801 safety remote I/O can be installed on mounting bases and within closed cases, such as control stations, all terminal boxes, and control racks. The XPSMF3DIO8801 has been developed in compliance with all applicable standards for EMC, climate, and environmental requirements.

Procedure

Mounting the remote I/O device requires the following steps:

Step	Action
1	Pull down the quick release clip.
2	Position the remote I/O device on the DIN rail. 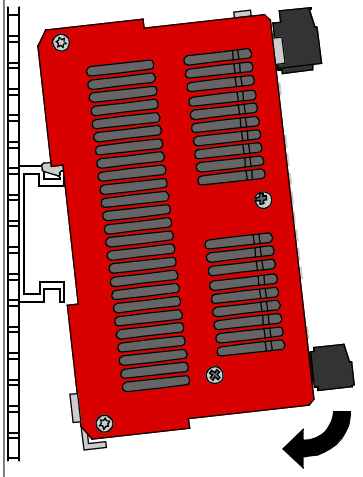
3	Release the clip.

Mounting the Remote I/O

Mount the remote I/O horizontally (so the F3DIO logo on the front panel is facing the user) to allow sufficient ventilation. We advise not to mount the remote I/O in a vertical position, because in this case additional measures are required to ensure the device does not move.

The minimum distance to any neighboring device from another manufacturer is as follows:

- vertical space of at least 100 mm (3.93in),
- horizontal space of at least 20 mm (0.78in).

Minimum clearances for the XPSMF3DIO8801 safety remote I/O (Compact Devices):

mm
inch

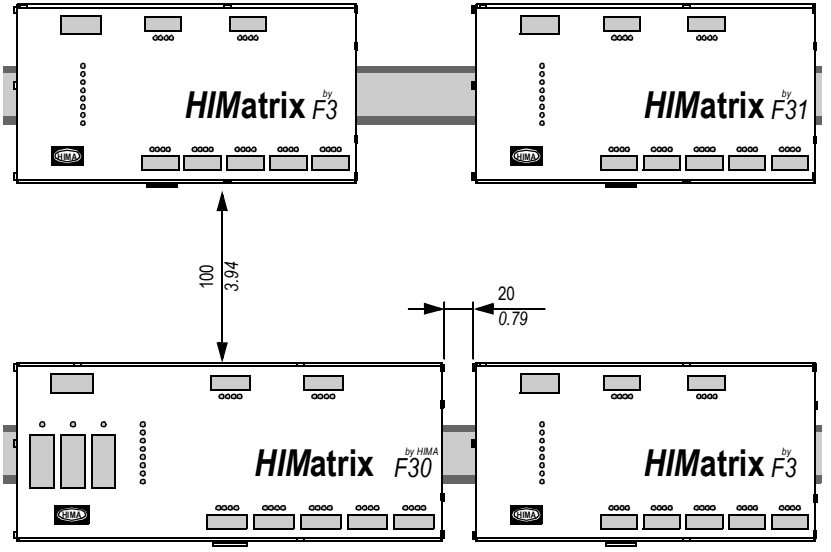

Note: The installation must be performed so that

- the device is not subject to heat emission from neighboring devices and
- devices with high EMC interference do not affect the XPSMF3DIO8801.

Heat emission and electromagnetic compatibility (EMC) must be checked for devices from other manufacturers to ensure that operation of the remote I/O device is not affected by any external device.
The overall installation space for all cables must also be taken into account to ensure sufficient ventilation. Additional measures, such as installing heat extraction fans, can be taken if the product's housing becomes warm.

For further information on operation temperature please refer to *Technical Data, p. 66*.

Air Circulation

The ventilation slots in the housing must not be covered. When installing the XPSMF3DIO8801 ensure that the height of the cable ducts does not exceed 40 mm/ 1.57 in. If the cable duct has the height greater than 40 mm/1.57 in., spacers must be placed behind the din rail. The illustration below shows an example of using spacers.

Use of cable ducts with horizontal mounting of compact devices on rails:

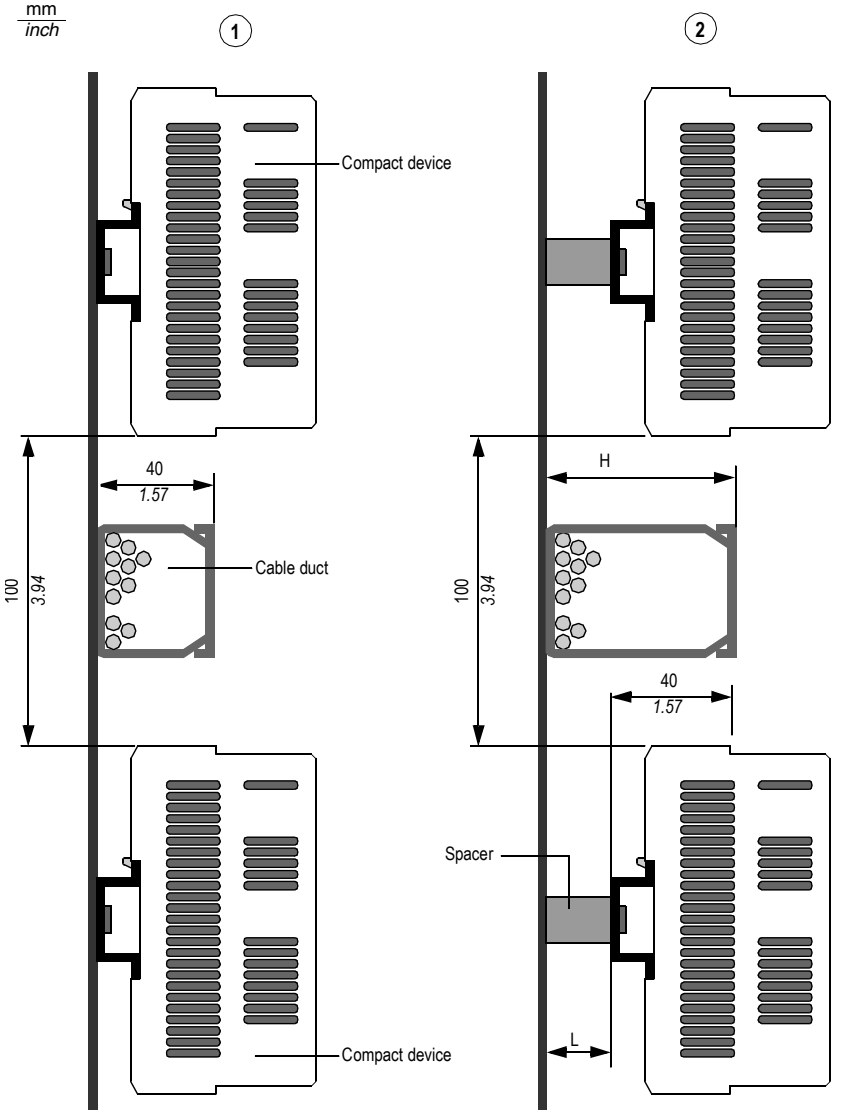

Installation with spacers:

No.	Description
1	The cable ducts' height is less than 40 mm/1.57 in.
2	The cable ducts' height is greater than 40 mm/1.57 in.

The length of the required spacer is calculated as follows:

L = H - 40mm/1.57in

L = length of the spacer

H = height of the cable duct

If more than two devices (even when the minimum vertical clearance of 100 mm is observed) are installed one above the other, additional ventilation measures are required to ensure even temperature distribution. The illustration below shows the minimum clearance in the event that the DIN rails are not installed on spacers.

The following images show the minimum clearance between the XPSMF3DIO8801 safety remote I/O devices:

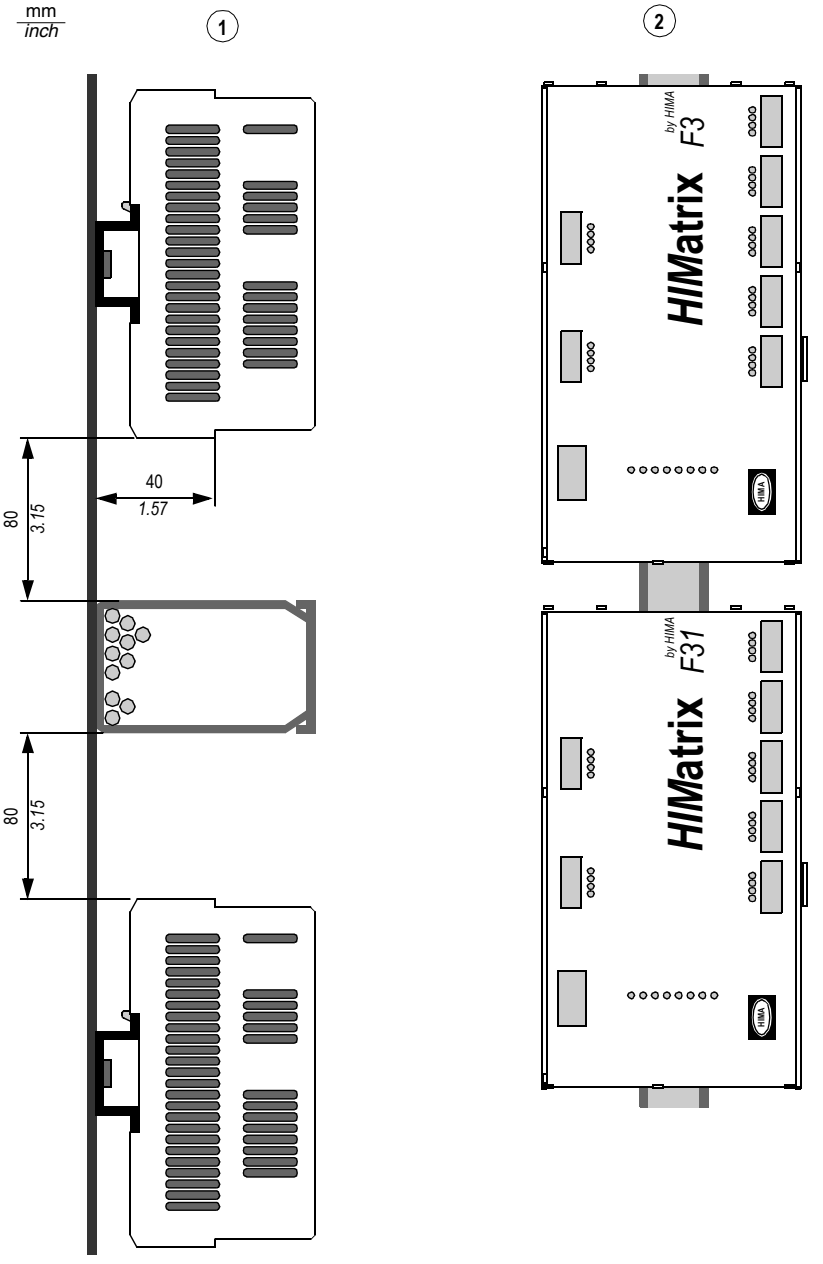

Minimum clearance between the remote I/O devices and Safety PLCs:

No.	Description
1	Installation with spacers: the cable ducts' height is greater than 40 mm/1,57 in; the vertical separation increases.
2	The XPSMF3DIO8801 safety remote I/O device is mounted vertically (not recommended).

Note: Additional means are required to ensure that the remote I/O device does not slide downwards while operating; any movement may cause strain on the wiring.

On open mounting surfaces, observing the minimum clearance and ensuring unobstructed air circulation will help maintain the optimum operating temperature.

Heat

The increasing integration of electronic components into smaller parts results in large amounts of heat dissipation on a small surface area. The amount of heat produced depends on the device's external load. Depending on the design of the device, installation, design location, air circulation, and environmental conditions make a very significant impact on the product's operating temperature.

⚠ WARNING

UNINTENDED EQUIPMENT OPERATION

Excessive heating can result in unexpected output operation.Follow all mounting and spacing instructions provided.

Failure to follow these instructions can result in death, serious injury, or equipment damage.

It is important to comply with the approved environmental conditions when installing the device. Reduced operating temperature extends the life of the device and reliability of the installed components.

If the XPSMF3DIO8801 requires an additional enclosure to increase the ingress protection, the enclosure case must be designed in such a way that the heat generated inside it can dissipate from the surface of the enclosure. The type of enclosure and location of installation selected must easily allow heat dissipation. If possible, a fan should be used to ensure air circulation.

Note: An additional enclosure can be used to increase the ingress protection of the XPSMF3DIO8801 safety remote I/O device.

The enclosure's surface area, A is calculated depending on the mounting or installation type as follows:

The following table is used to calculate the recommended enclosure size for mounting the XPSMF3DIO8801:

Case installation		**Calculation of A [m^2] ($1m^2$=$10.76ft^2$)**
Single case free on all sides		A = 1.8 x H x (W + D) + 1.4 x W x D
Single case for wall mounting		A = 1.4 x W x (H + D) + 1.8 x H x D
End case free-standing		A = 1.4 x D x (W + H) + 1.8 x W x H
End case for wall mounting		A = 1.4 x H x (W + D) + 1.4 x W x D
Center case free-standing		A = 1.8 x W x H + 1.4 x W x D + H x D
Center case for wall mounting		A = 1.4 x W x (H + D) + H x D
Center case for wall mounting, top surface covered		A = 1.4 x W x H + 0.7 x W x D + H x D
A the enclosure's surface area **W** width **H** height **D** depth		

Internal Convection

With internal heat convection, the heat is dissipated outside through the walls of the housing. This is possible when the ambient temperature is lower than that inside the housing.

The following table describes the variables used to calculate the internal convection:

Variable	Description
P_v [W]	heat output (heat dissipation) of the electronic components
A [m^2]*	effective surface area of the housing
k [W/m^2 K]*	the housing heat transfer coefficient (e.g., Steel sheet: approximately 5.5 W/m^2 K)*

* ($1m^2 = 10.76ft^2$)

The maximum temperature increase of all electronic devices inside the housing is calculated as follows:

$$(\Delta T)max = \frac{Pv}{k \bullet A}$$

The power dissipation P_v can be calculated based on the values of the electrical power of the controller, its inputs, and outputs.

Temperature State/Operating Temperature

The remote I/O modules are designed to operate with the maximum temperature of 60°C/140°F. The temperature states in single modules and PLCs are evaluated by the CPU module or the remote I/O device's CPU for compact systems. The temperature state of a particular module or PLC is measured by a sensor. The sensor monitors the temperature state of the remote I/O device automatically and continuously.

The following table shows the ranges in which the temperature state signals the measured temperature:

Temperature Range	Temperature State	Temperature State System Signal
<60°C/140°F	normal	0x00
60 to 70°C/140°F to 158°F	high temperature	0x01
>70°C/158°F	very high temperature	0x03
Return to 64°C/147.2°F	high temperature	0x01
Return to <54°C/129.2°F	normal	0x00

Note: The difference in temperature increase and decrease ranges is the result of the sensor's hysteresis that equals 6°C / 10.8°F.

Temperature state **High temperature** indicates the following:

operating temperature = max temperature (delta T)max + ambient temperature ≥ 60°C/140°F.

In this case, support the internal convection by adding air grilles or increasing the free space between the remote I/O devices.

Temperature state **Very high temperature** indicates the following:

operating temperature = max temperature (delta T)max + ambient temperature ≥ 70°C/158°F.

In this case, support the internal convection by integrating additional active cooling elements (fan, coolant devices, etc.) or increasing the free space around the remote I/O devices.

If the sensor indicates a temperature increase above the critical threshold, the temperature state changes. The temperature states can be evaluated using the **Temperature State** system signal of the XPSMFWIN.

Application and Function

2

At a Glance

Overview

This chapter describes the application and function of XPSMF3DIO8801 safety remote I/O.

What's in this Chapter?

This chapter contains the following topics:

Topic	Page
Initial Operation	24
Application	25
Function	26
Offline Proof-Test	40

Initial Operation

Overview

The following section contains information about the initial operation of the XPSMF3DIO8801 safety remote I/O.

First Power-Up

The following table describes the first power-up behavior of the XPSMF3DIO8801 safety remote I/O device:

Stage	Description
1	Power Supply LED (green) is illuminated for 0.5 sec.
2	All LEDs are illuminated for 5 sec.
3	24V DC LED is illuminated. Prog LED (orange) is flashing.

⚠ DANGER

HAZARD OF ELECTRICAL SHOCK, EXPLOSION OR ARC FLASH

Disconnect all power before servicing equipment.

Failure to follow these instructions will result in death or serious injury.

Application

Overview

The XPSMF3DIO8801 safety remote I/O is certified to the following standards:

- SIL 3, according to IEC 61508
- Category 4, according to EN 954-1
- IEC 61131-2
- prEN 501156
- DIN V 19250 up to RC 6
- NFPA 8501, NFPA 8502

The extensive hardware range and safe data transmission allow the system to be optimized to suit anticipated or existing plant structures.

The safety-related networking of the remote I/O device takes place on Ethernet using SafeEthernet protocol, which is based on standard Ethernet technology and is certified to TÜV/BG. The Ethernet medium allows data to be transmitted up to 100 Mbit/s half duplex and 10 Mbit/s full duplex and supports the use of the entire range of Ethernet functions for networked applications.

A combination of a high-speed Safety PLC and a high-speed safety bus protocol (SafeEthernet) offers new levels of flexibility for automation process solutions.

Today's system limits of safety-related automation concepts are disappearing. Scope is being created for truly application-based solutions.

Key features of the XPSMF3DIO8801 safety remote I/O:

- Certification up to SIL 3, according to IEC 61508.
  Category 4, EN 954-1.
- Communication via SafeEthernet and Modbus TCP/IP.
- Versatility. You can use the remote I/O device in all environmental conditions with additional equipment.
- Quick and easy network configuration.
- User-friendly interfaces.

Function

Overview

This section describes functions of the XPSMF3DIO8801 safety remote I/O.

Block Diagram

The following is a block diagram of the XPSMF3DIO8801 safety remote I/O:

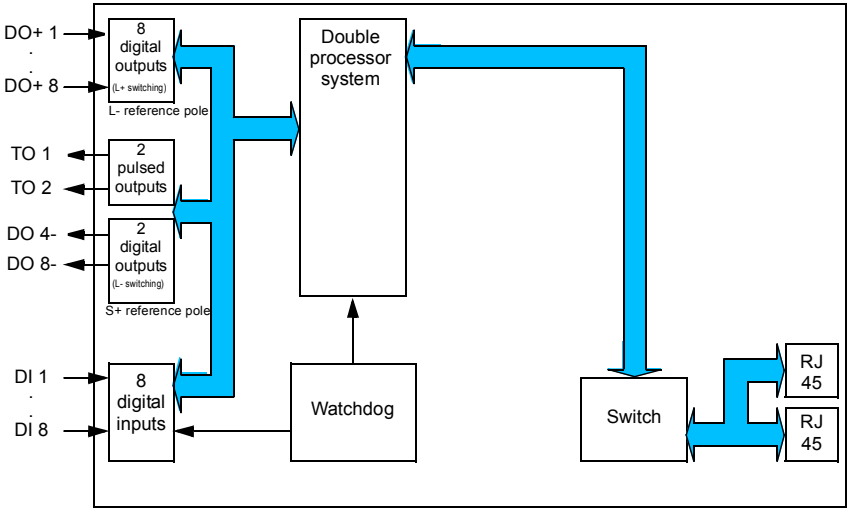

The following is a short description of the diagram's components:

- Inputs: 8 digital inputs
- Outputs: 8 digital DO+ outputs, 2 digital DO- outputs, and 2 pulsed outputs
- Double Processor System: Each processor processes the same data and is compared
- Watchdog Control Unit: monitors cycle time
- 2-port switch with a built-in **auto cross-over** function, which allows the use of both the 1:1 and cross-over cables
- 2 RJ 45 connectors for 1:1 or cross-over cable

Line Control

Line Control is a short-circuit and line break monitoring system, e.g., for Emergency Stop Control (category 4, according to EN 954-1), which can be configured on the XPSMF3DIO8801 system. Pulsed outputs TO 1 and TO 2 can be connected to the DI digital inputs of the same system.

The following diagram shows connection of digital outputs and digital inputs:

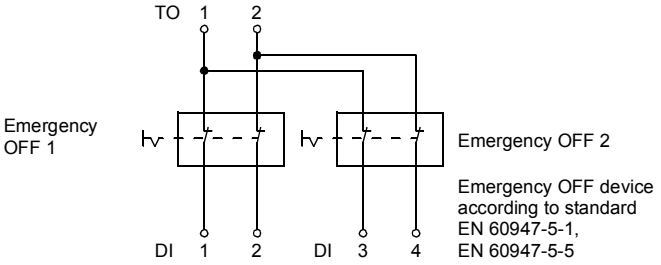

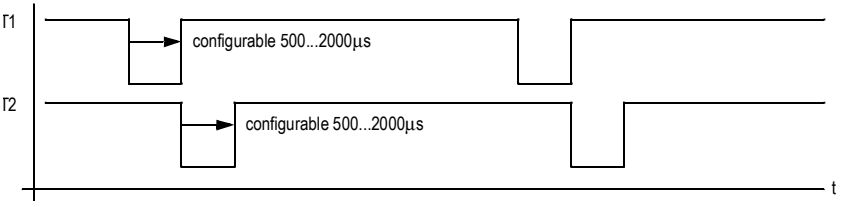

The above time graph shows the variation of 2 pulsed channels. When connected, the inputs of the system are expecting the specific pulse value. If the pulse is not received or an alternate pulse is received, the system will automatically set the output of the specific system to the safe "zero" state. If a line break, short circuit or an alternate signal is present, the FAULT LED on the front of the remote I/O device will flash repeatedly until the problem is fixed. The system will then cyclically reconnect all the pulsed outputs.

⚠ WARNING

PULSED OUTPUTS

Pulsed outputs must not be used as safety-related outputs!

Failure to follow these instructions can result in death, serious injury, or equipment damage.

The following faults may occur:

- Short circuit between 2 parallel lines
- Change of 2 lines, e.g., DO 2 to DI 7 (configured), DO 2 to DI 6 (wired)
- Earth fault on 1 of the lines (only with earthed reference pole)
- Line break
- Opening of the contacts (i.e., 1 of the Emergency Stop switches is pressed)

If any of the faults occur,

- the FAULT LED on the front panel of the remote I/O is illuminated,
- the outputs are set to 0, and
- the fault code is generated.

Note: The XPSMF3DIO8801 safety remote I/O device is designed for the deenergize to trip principle. If a fault occurs, the input and output signals revert to voltage- or current-free states to ensure safe operation.

Safety-Related Digital Inputs

The XPSMF3DIO8801 safety remote I/O has 8 digital inputs. The 8 LEDs (DI) indicate the status of the inputs.

Short-circuit-proof 24V sources supply potential free sensor contacts with LS+. A voltage source provides power to all 8 digital inputs.

Signal sources with their own dedicated power supply can also be connected instead of contacts. The reference pole of the signal source must then be connected to the reference pole of the input (L-).

The following diagram shows connections of potential-free contacts and signal voltage sources:

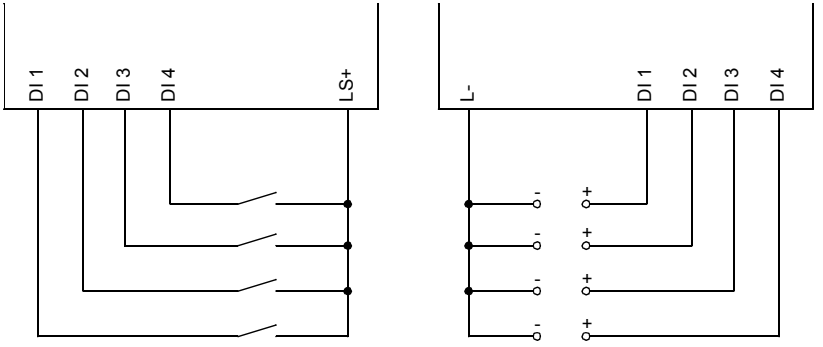

The safe state of the input is indicated by a 0-signal being passed to the logic of the user program. If the test routines detect a fault in the digital inputs, a 0-signal is processed in the user program for the defective channel, according to the deenergize to trip principle. The FAULT LED is then illuminated.

The deenergize to trip principle should be used with external wiring and when connecting sensors. To create a safe state in case of a fault, the input signals revert to the deenergized state (0-signal). The external line is not monitored, but a wire break is interpreted as a safe 0-signal.

The digital inputs are connected to the following terminals:

Terminal No.	Designation	Function (Inputs)
19	LS+	sensor supply for inputs 1 to 4
20	1	digital input 1
21	2	digital input 2
22	3	digital input 3
23	4	digital input 4
24	L-	reference pole

Terminal No.	Designation	Function (Inputs)
25	LS+	sensor supply for inputs 5 to 8
26	5	digital input 5
27	6	digital input 6
28	7	digital input 7
29	8	digital input 8
30	L-	reference pole

Surge on Digital Inputs

In the case of digital inputs, an EN 61000-4-5 surge impulse can be read as a short-time high signal (caused by the short cycle time of the XPSMF3DIO8801 system).

To avoid errors in these cases, 1 of the following measures must be taken in respect to the applications:

- installation of shielded input lines to prevent the effects of surges in the system
- noise blanking in the application program - a signal must be present for at least 2 cycles before it is evaluated

Note: Proper EMC design techniques will allow the designer of the safety system to achieve the maximum performance by using the minimum response time of the safety PLC.

Safety-Related Digital Outputs

The XPSMF3DIO8801 safety remote I/O has 8 digital outputs DO+ (L- reference pole) and 2 digital outputs DO- (S+ reference pole). Each digital output has its own LED to indicate the status of the output.

An output is in a safe state when it is deenergized. If a fault occurs, all outputs are switched off. If there is a fault in the module all outputs are switched off. In the event of a fault due to ethernet communication the relevant outputs are set to their initial value, how actuators respond to such a case should be taken into account.

Faults in 1 or more channels as well as an internal fault on the module are indicated by the FAULT LED on the front panel of the module. The systems signals in the XPSMFWIN programming environment can be used to evaluate the fault.

The following table shows the dependance between the ambient temperature and outputs' current:

Ambient Temperature	Outputs
20 to 40°C/ 68 to 104°F	Outputs DO+ 1-3 and 5-7 each supply up to 0.5 A. Outputs DO+ 4 and 8 can each supply up to 2 A. Outputs DO- 4 and 8 can supply up to 2 A.
50°C/122°F (maximum)	Outputs DO+ 1-3 and 5-7 can each supply up to 0.5 A. Outputs DO+ 4 and 8 can each supply up to 1 A. Outputs DO- 4 and 8 can each supply up to 1 A.
60°C/140°F (overload)	One or all outputs are switched off. When the overload is eliminated, the outputs are activated again, according to the specified value (see *Technical Characteristics, p. 64*)

The digital outputs DO4+, DO8+, DO4-, and DO8- can be connected in a 1 or 2-pole manner. The other digital outputs are connected in a single pole manner.

When using the single pole connection, the L- reference pole must be used to connect to the corresponding channel group of the DO+ outputs, as well as using the S+ reference pole for the DO- outputs.

When using the 2 pole connection, the L+ switching output DO4+ must operate with the L- switching output DO 4- and the L+ switching output DO8+ can operate with the L- switching output DO8-.

This connection manner must be set via the system signal `DO2[xx].2-pole`.

With 2 pole operation, line control must be used to detect a short circuit condition. A switch on delay is required to detect a short circuit condition when an inductive or capacitive load, lamp load is connected. This delay can be set in the XPSMFWIN programming environment.

This delay can be set in the XPSMFWIN Hardware Management via the signal `Switch-on delay` at the outputs DO- (register **Output**). In the range of 0...30 ms the value can be set in steps of 1 ms.

The external wiring of an output is not monitored, but a short-circuit will be detected.

Note: For all corresponding system signals used in line monitoring initial values have to be set (`DO[xx].2-pole`, `Switch-on delay`). Therefore all needed system signals must be set first in XPSMFWIN, then the application program must be compiled and at last the program must be transferred to the controller. A change of the settings for the system signals of line monitoring is not possible during operation.

The digital outputs are connected to the following terminals:

Terminal No.	Designation	Function (Outputs, DO-)
4	4-	digital output 4- (for increased load)
5	8-	digital output 8- (for increased load)
6	S+	reference pole channel group

Terminal No.	Designation	Function (Outputs, DO+)
7	L-	reference pole channel group
8	1	digital output 1
9	2	digital output 2
10	3	digital output 3
11	4+	digital output 4+ (for increased load)
12	L-	reference pole channel group

Terminal No.	Designation	Function (Outputs, DO+)
13	L-	reference pole channel group
14	5	digital output 5
15	6	digital output 6
16	7	digital output 7
17	8+	digital output 8+ (for increased load)
18	L-	reference pole channel group

The following diagram shows an example of connecting actuators to the outputs:

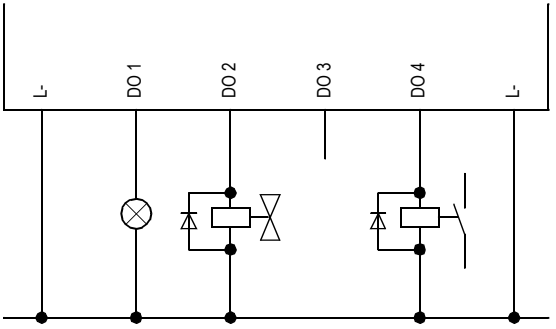

⚠ WARNING

RISK OF EQUIPMENT DAMAGE

When connecting a load use the appertaining reference pole L- of the concerned channel group (2-pole connection). Otherwise the internal protective circuits cannot work.

Failure to follow these instructions can result in death, serious injury, or equipment damage.

The above diagram shows an example of how to connect actuators to the outputs of the safety remote I/O. It is possible for inductive loads to be connected to the safety remote I/O without using a protection diode on the load. However, to suppress any possible interference voltage, we strongly recommend using the protection diode, as shown in the example above.

The following diagram shows 2-pole connection between digital outputs (DO-, DO+):

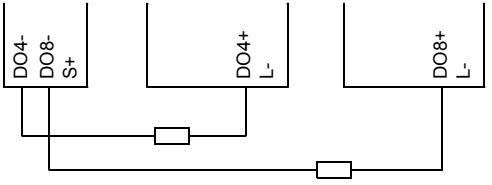

Pulsed Outputs

The 2 pulsed outputs can be used for Line Control (short-circuit or line break monitoring of digital inputs), e.g., with Emergency Stop buttons, according to Cat. 4, as specified in EN 954-1.

Note: Pulsed outputs must not be used as safety-related outputs, e.g., to control safety-related actuators!

The following table shows terminal assignment of the pulsed outputs:

Terminal No.	Designation	Function (not safety-related outputs TO)
1	L-	reference pole
2	1	pulsed output 1
3	2	pulsed output 2

Cable Disconnection

In a Safety PLC network, areas are covered using the Safety network. Therefore, damage or disconnection of the communications cable may occur. In the system below, the "X" represents a cable break between Safety PLC 2 and Safety PLC 3. The communications between each of the systems will cease. As a result, the following will occur:

- if the Safety PLC 2 system was dependent on the inputs of the Safety PLC 3 system, the corresponding outputs will automatically be set to "zero",
- if the Safety PLC 3 system was dependent on the inputs of the Safety PLC 2 system, the corresponding outputs will automatically be set to "zero", and
- if the systems are still provided with the 24 VDC power supply, the two systems will continue to operate the remaining inputs and outputs of each separate system.

The following diagram shows an example of the Safety PLC network interruption:

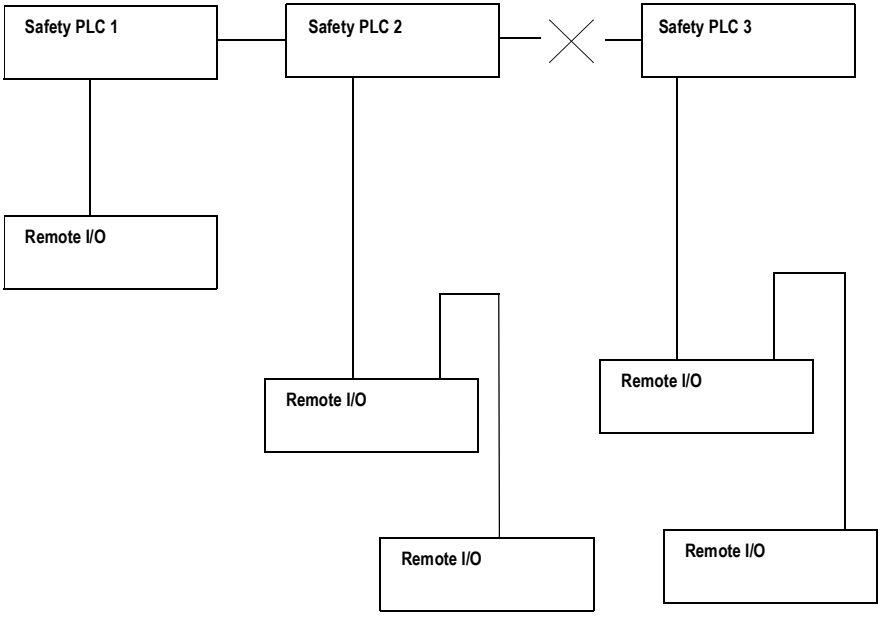

If the local network is reacting only on the inputs of the same system, the PLC system continues to run without failure.

Power Supply Interruption

The following table shows reactions to the changes in operating voltage:

Voltage level	Reaction of the controller
19.3 to 28.8 VDC	Normal operation
< 18.0 VDC	Warning state: system variable is set. If the application program is monitoring the system variable, this programmed reaction is carried out, otherwise the application program runs normally.
< 12.0 VDC	Inputs and outputs are switched off.

If power supply is interrupted, all inputs and outputs return to the off "safe" state.

Small System Reconfiguration

A Safety PLC can be reconfigured while the network is executing an existing configuration. The resources which require reconfiguration must be stopped. The following table describes the reconfiguration procedure:

Step	Action
1	Using the XPSMFWIN programming environment, stop the Safety PLC's system which requires the new configuration.
2	Download the new configuration fully checked by a qualified safety engineer to the Safety PLC or Remote I/O module via Ethernet cable Cat 5, grade D or better.
3	Once the module is re-programmed, start the device.
4	Execute the new configuration immediately.

Large System Reconfiguration

The following table describes the reconfiguration procedure for large systems:

Step	Action
1	Stop the relevant resources within the network using the XPSMFWIN programming environment, small segments of a network can be reconfigured in stages.
2	Connect your PC to any Ethernet communications point.
3	Download the new configuration(s) fully checked by a qualified safety engineer to the Safety PLC network via Ethernet cable Cat 5, grade D or better.
4	Restart all devices, preferably in stages - system by system.

Short-Circuit Characteristics of the Output Channels

If a short-circuit occurs in an output channel, the safety remote device switches off the affected channel. If multiple short-circuits occur, the channels are switched off individually in accordance with their power consumption.

If the maximally permitted current for all outputs is exceeded, all outputs are shut down and cyclically reconnected.

⚠ WARNING

SHORT-CIRCUIT CONDITION

The output circuit terminals must not be connected with the connected load. In case of a short-circuit, the resulting high current may damage the terminals.

Failure to follow these instructions can result in death, serious injury, or equipment damage.

Diagnostics

Using the XPSMFWIN programming environment, all the safety remote I/O device's inputs and outputs can be viewed. Each safety remote device provides diagnostic signals with reference to their status, error codes, and channel status.

In XPSMFWIN all diagnostic information can be viewed in 2 ways:

- Using the **On-line** test function - it can monitor the values of the signals and variables within the logic plan, while the systems are executing the program.
- Using the **Diagnostics** window that displays all states of the CPU, COM, and I/O modules.

Replacing Faulty Modules

If a safety remote I/O device fails, the following replacement procedure is used:

Step	Action
1	Disconnect power supply to the specific module.
2	Disconnect all terminals (removing input or output wires is not required).
3	Disconnect communication - Ethernet from the remote I/O.
4	Loosen the DIN rail clip and dismount the module.
5	Mount the new module and release the DIN rail clip.
6	Re-connect power supply.
7	Connect to the PC that is executing XPSMFWIN via Ethernet cable.
8	Enter new communication settings for MAC address and IP address.
9	Download the configuration used by the previous module.
10	Connect all I/O terminals to the new module. Rewiring is not necessary, but the terminals must be inspected to ensure they are in good operating condition.
11	Re-establish network connection.
12	Run the module.

Testing the Inputs and Outputs for Interference Voltage and Earth Faults

Inadmissible interference voltage can be measured with a universal tester. We recommend testing every single terminal for unapproved interference voltage.

When testing the external cables for insulation resistance, short-circuit, and line break, the cables must not be connected at both ends to prevent defects or destruction of the XPSMF3DIO8801 caused by excessive voltages.

Earth faults are to be tested before connecting the field cable to the devices. The supply voltage must be disconnected from the sensors, as well as between the negative pole and the actuators. If the negative pole is earthed during operation, the earth connection must be disconnected while testing for earth faults. This also applies to the earth connection of an existing earth fault tester. Every terminal can only be tested against earth with a resistance tester or a similar test instrument.

Testing the insulation of one or more wires against earth is admissible, but not 2 muted wires. High voltage testing is also not admissible.

Guidelines to measure circuit voltage and insulation resistance can be found in EN 50178.

Maintenance

The XPSMF3DIO8801 safety remote I/O is designed for industrial applications. All the components have a very high availability and are compliant with the requirements of IEC 61508 for PFD and PFH in accordance with SIL 3.

Note: For safety-related use, the modules have to be subjected to an offline proof-test in intervals of 10 years. For Offline Proof Test, see *Offline Proof-Test, p. 40*

⚠ WARNING

OFFLINE PROOF TEST

Offline Proof Test according to IEC 61508-4 must be conducted to verify proper operation.

Failure to follow these instructions can result in death, serious injury, or equipment damage.

Repair of Remote I/O Modules

You may not repair the XPSMF3DIO8801 safety remote I/O device. Defective devices must be returned to Schneider Electric for repair.

The validity of the safety certificate will expire if unauthorized repairs have been made on the device. The manufacturer will bear no responsibility for unauthorized repairs. Unauthorized repairs will also cancel all warranties for the device.

Offline Proof-Test

Overview

The offline proof-test recognizes dangerous concealed faults that would affect the safe function of the plant.

Safety systems have to be subjected to an offline proof test in intervals of 10 years. By an analysis using the calculation tool SILence, the interval often may be extended. (SILence is a seperate program. Contact the service for more information or take a look at the HIMA homepage for a test version of the software SILence.)

For relay modules, the proof test for the relays has to be carried out in intervals defined for the respective plant.

Execution of the Offline Proof Test

The execution of the offline proof test depends on the configuration of the plant (EUC = equipment under control), which risk potential it has, and which standards for operation are applied and form the bases for the approval by the test authority in charge.

According to the standards IEC 61508 1-7, IEC 61511 1-3, IEC 62061, and VDI/VDE 2180 sheet 1 to 4, in case of safety-related systems the operating company has to arrange for proof tests.

Periodic Proof Testing

The modules can be proof tested by executing the full safety loop.

In practice the input and output field devices have a more frequent proof test interval (e.g., every 6 or 12 months) than the modules. If the end-user tests the complete safety loop because of the field devices then the modules are automatically included in these tests. No additional periodic tests are required for the modules.

If the proof test of the field devices does not include the modules then the PES needs to be tested as a minimum once in 10 year. This can be done by executing a reset of the modules.

In case there are periodic proof test requirements for specific modules then the end-user should refer to the data sheets of these modules.

Equipment Description

3

At a Glance

Overview

This chapter contains the equipment description of XPSMF3DIO8801 safety remote I/O.

What's in this Chapter?

This chapter contains the following topics:

Topic	Page
Housing Elements	42
Reset Button	45
Communication	46
LEDs	50
Wiring	53
IP Addressing and System ID	55
SafeEthernet	56
Operating Conditions	61
Technical Characteristics	64
Additional Items	69

Housing Elements

Front View

The following image shows the various elements of the front panel of XPSMF3DIO8801 safety remote I/O:

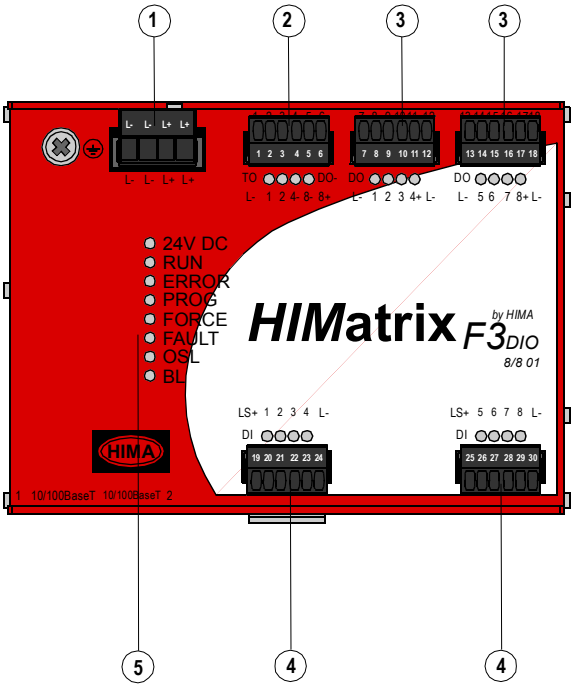

Elements of the front panel:

No.	Description
1	power supply input
2	pulsed outputs
3	digital outputs
4	digital inputs
5	Indicators

Top View

The following image shows the elements of the top panel:

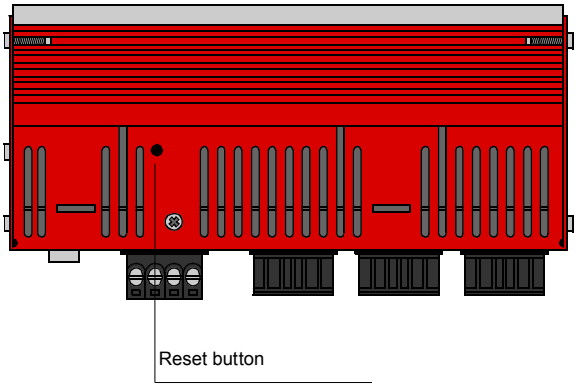

Bottom View

The following image shows the elements of the bottom panel:

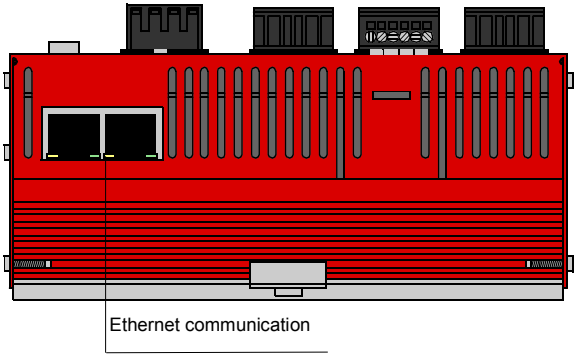

Back Panel

The following image shows elements of the back panel:

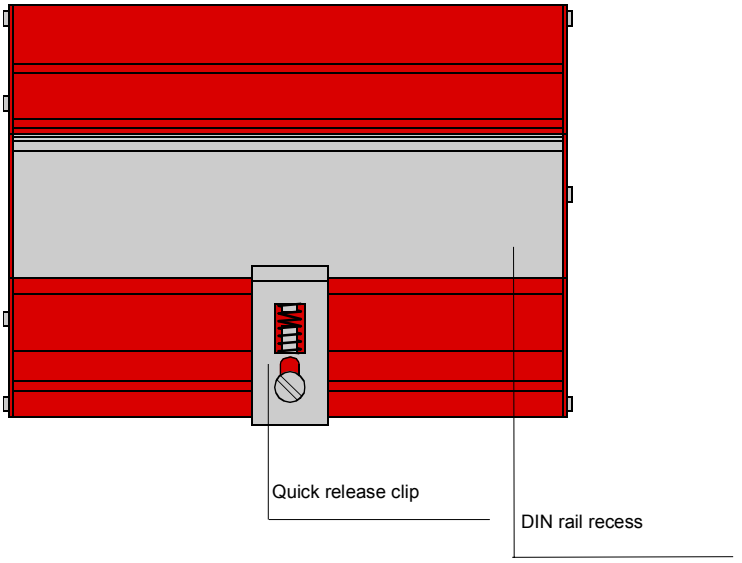

Reset Button

Overview

The device is equipped with a Reset button. The Reset button is used if the PC connection password is lost.

Using Reset Button

You can access the pushbutton through a small round opening on the upper side of the housing, about 40-50 mm/1.57-1.97in from the left rim.

Use the button only while you reboot the device and keep the button pressed for at least 20 s. Pushing the Reset button while the device is running produces no result.

Effect

When you push the Reset button,

- all accounts are deactivated (except the default `Administrator` account without password) and
- IP addresses and system ID (SRS) are set to default values.

Note: After activation of the Reset button, values are modified and remain valid until the next reboot. After the next reboot the previous values are restored. You can enter new information, if necessary.

Communication

Overview

The Safety PLCs and remote I/O devices communicate with each other and the PC using SafeEthernet protocol.

The Safety PLCs communicate with each other and with a PC through a star or linear Ethernet layout. A PC can be connected at any place in the network.

The communication section is connected to the safe microprocessor system. It controls communication between PES and other systems via powerful interfaces, such as 100 BaseT: SafeEthernet, Modbus TCP/IP

Safety-Related Communication

Communication via switches

The switch integrated into each system for Ethernet communication is shown on the block diagram (see *Block Diagram, p. 26*).

In contrast to a hub, a switch can store data packets for a short period of time in order to establish a temporary connection between two communication partners (transmitter/receiver) for transferring data. This way, collisions (typically occurring in hubs) can be avoided, and the load on the network can be reduced. For controlled data transfer, every switch needs an address/port relation table. This table will be automatically generated in a self-learning process. Each port in the switch is corellated to the defined MAC addresses. According to this table, incoming data packets are switched directly to the corresponding port.

The switch automatically switches between the transfer rates of 10 and 100MBit/s full and half duplex transmissions.

The switch controls communication between different devices. The switch can address up to 1000 absolute MAC addresses.

Autocrossing recognises if cables with crossed wires have been connected, and the switch adjusts accordingly.

For networking via Ethernet, the XPSMF3DIO8801 safety remote I/O device is equipped with two connections arranged on the lower side panel of the case. Various systems can be networked as required via Ethernet star or line configuration. A PC can also be connected wherever required.

Note: When building the network, ensure that no network loops are formed. The system must receive data along only one path.

The following scheme shows a SafeEthernet networking example:

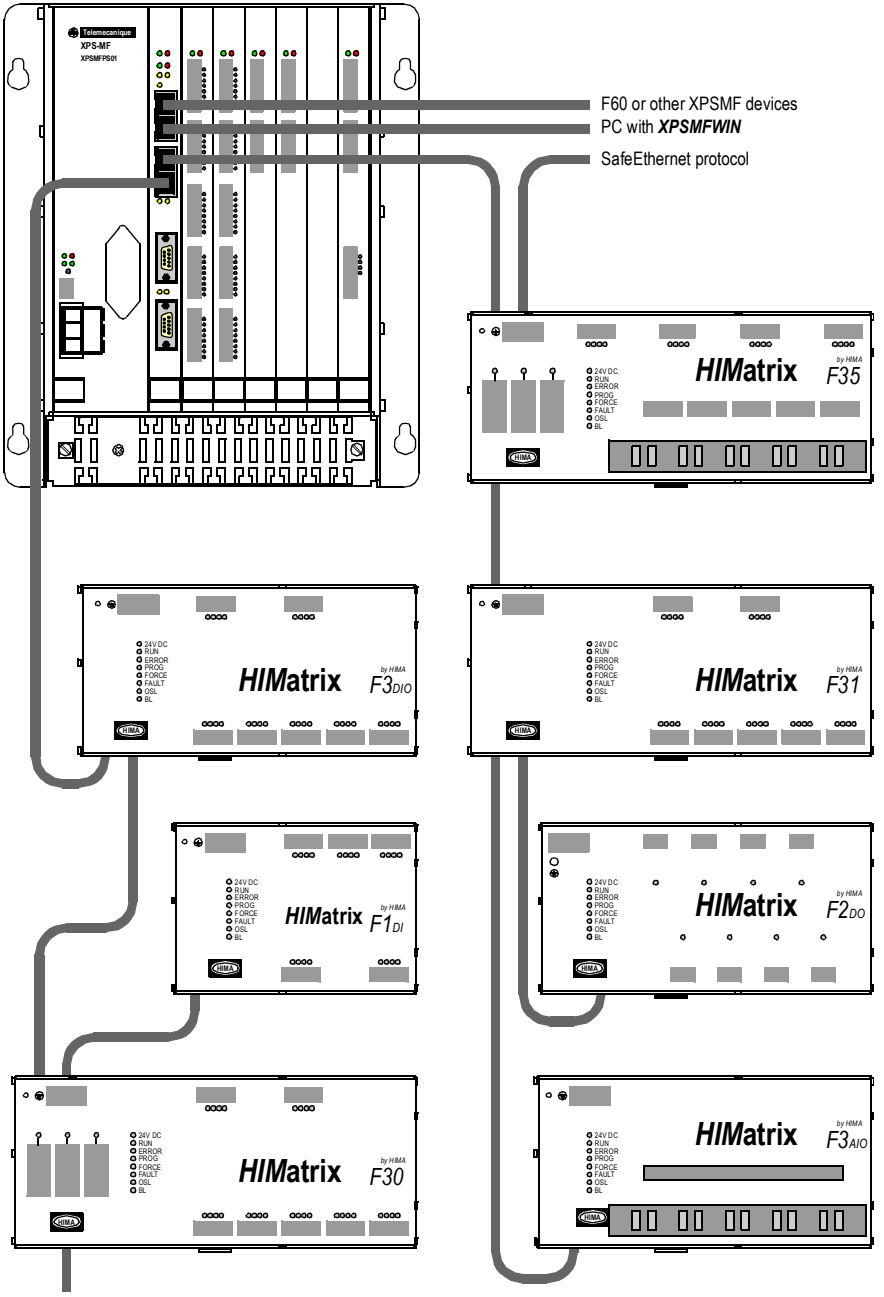

The following is a Ethernet cable connection diagram:

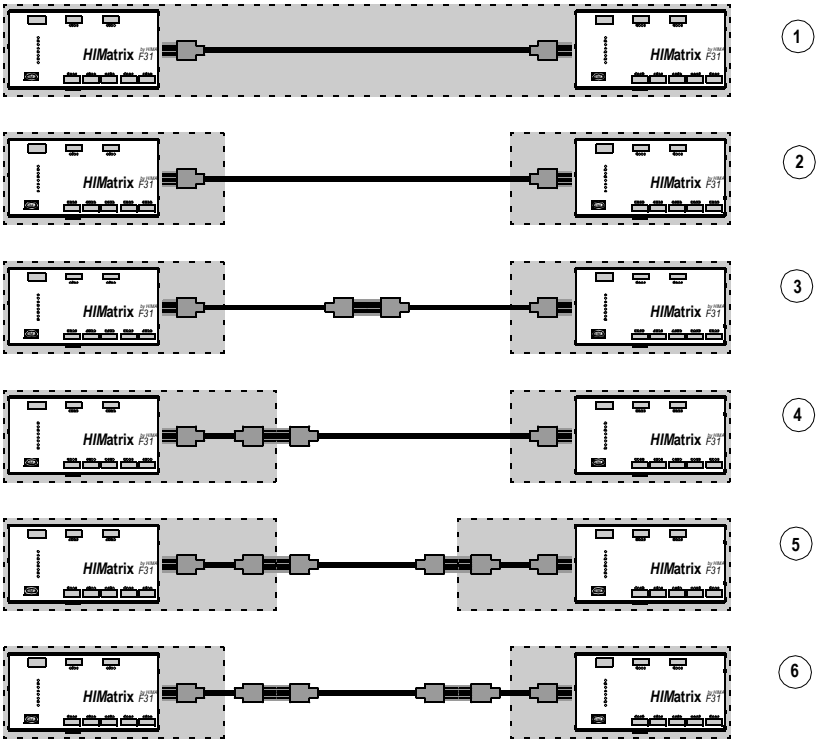

Legend:

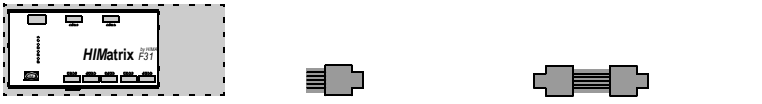

Connector pairs and cable distances:

Number	Number of plug connector pairs	Maximum cable distance
1	2	100m/328.1ft
2	2	100m/328.1ft
3	3	100m/328.1ft
4	3	100m/328.1ft
5	4	100m/328.1ft
6	4	100m/328.1ft

When using specified cables and plug connectors approved to 100MHz, the maximum cable distance is 100m/328.1ft with a maximum of six connector pairs. A combination of a plug and a socket is considered one pair.

Use optic fiber cables with converters for greater distances.

Using SafeEthernet protocol has the following advantages:

- Very fast packet transfer between the collision areas
- Significant increase of data throughput with full-duplex mode
- Prevention of collisions allows deterministic operation.

LEDs

Overview

The XPSMF3DIO8801 safety remote I/O device LEDs:

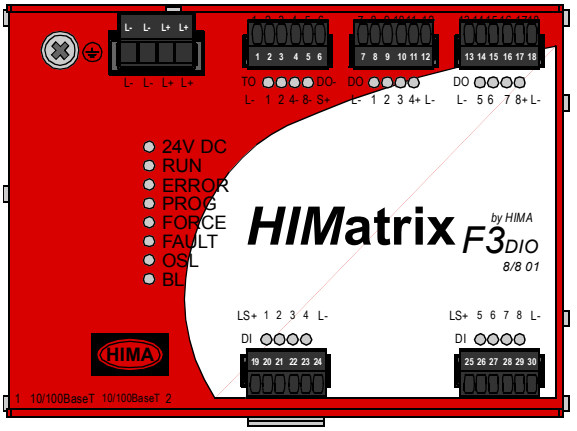

LED Description The following table describes behaviors of the LEDs:

LED	Color	Status	Meaning
Digital Inputs 1-8	orange	on	An input signal is in state high.
Digital Outputs DO+:1-8, and DO-:4 & 8	orange	on	An output signal is in state higth.
	not illuminated	off	An output signal is in low state.
Pulsed Outputs TO 1, TO 2	orange not illuminated	on off	Pulsed output is active. Pulsed output is not active.
24 VDC	green	on	24 VDC operating voltage present
	not illuminated	off	no operating voltage
RUN	green	on	Normal state of PES (RUN) A loader user program is executed (not in remote I/O modules). The CPU reads inputs, processes the logic, and writes outputs; communication and hardware/software tests are carried out.
	green	flash	The CPU is in STOP and is not executing any user program. All outputs are reset to a safe de-energized state. STOP can be triggered by setting the Emergency stop system variable to TRUE in the user program or by a direct command from the PC. Seen when PLC is switched on for approximately 10s during the system check.
	not illuminated	off	The CPU in ERROR STOP (see ERROR below).
ERROR	red	on	• The CPU has discovered a hardware fault in the CPU and is switching to ERROR STOP. • The CPU has discovered a software error in the operating system. The watchdog has triggered ERROR STOP, because the cycle time has been exceeded. • The CPU has stopped the execution of the user program, ended all hardware and software tests, and all outputs have been reset. The CPU can only be started again through a command from the PC.
	not illuminated	off	No error has been detected.
PROG	orange	on	The CPU is being loaded with a new configuration.
	orange	flash	The Flash ROM is being loaded with a new operating system.
	not illuminated	off	No loading of configuration or operating system.
FORCE	not illuminated	off	FORCE is not signalled.
	orange	on	Force active.

LED	Color	Status	Meaning
FAULT	orange	on	Line control error. ● The user program has caused an error. ● The PES configuration is faulty. ● The loading of a new operating system was faulty, and the operating system is corrupt.
	orange	flash	● An error has occured during the write cycle for a Flash ROM (during the oprating system update). ● One or more I/O errors have occured.
	not illuminated	off	None of the above errors has occured.
OSL	orange	flash	Emergency loader of the operating system is active.
BL	orange	flash	COM in `INIT_FAIL` state.
RJ45	green	on	Full duplex operation.
		flash	Collision
		off	Half-duplex operation, no collision
	yellow	on	Connection established
		flash	Interface activity

Wiring

Ethernet Wiring

Industrial standard cables can be subjected to extreme mechanical stresses. The minimum for SafeEthernet protocol communication requires Category 5 twisted pair cable with a class D rating, for greater distances and less possibility for errors occurring, fiber optic cable should be used.

The controllers communicate at 100 Mbit/s (Fast Ethernet) and 10 Mbit/s during full duplex mode. The XPSMF3DIO8801 safety remote I/O device has an auto "cross-over" function built into the switch, which allows the use of both a 1:1 cable and a cross-over cable.

The outer shielding of the twisted pair cable must be earthed at both ends. If an RJ 45 connector is used, it automatically connects the cable's shield to the controller’s housing.

Interface Elements

When connecting a PLC or remote I/O module over Ethernet communication, the following interface elements are recommended: FL CAT5 TERMINAL BOX of Phoenix Contact (R). The controllers are mounted on an earthed EN mounting rail. The conductors of the field cable are attached to the interface terminals. It is important to make sure that the cable shield is also connected via the strain relief.

Prefabricated patch cables are used to connect the interface element and the XPSMF3DIO8801 safety remote I/O device. If the rail is earthed in accordance with the standards, it is enough to mount an interface element on a rail.

Specified Cables

The cables are specified by category depending on their transmission and high-frequency properties as follows:

Category	Specification	Approved
1	-	no
2	up to 1 MHz	no
3	up to 16 MHz	no
4	up to 20 MHz	no
5	up to 100 MHz	yes
6	up to 250 MHz	yes
7	up to 600 MHz	yes

The channel as a point-to-point transmission path is defined as follows:

Class	Specification	Approved
A	up to 0.1 MHz	no
B	up to 1 MHz	no
C	up to 16 MHz	no
D	up to 100 MHz	yes
E	up to 250 MHz	yes
F	up to 600 MHz	yes

The higher the letter, the greater the demand on the transmission channel. For Ethernet communication at 100 MHz, Category 5 (or higher) cables and at least Class D capacity are required.

RJ45 Connector

For direct Ethernet plug connections without interface elements, you can use connectors such as IP 20 Data Plug (Harting(R)). You can assemble the cable quickly by crimping the conductors; special tools are not required.

Switches

To span distances of more than 100m/328.1ft using SafeEthernet protocol, rail switches of the RS2 series (Hirschmann(R)) with optical fibre ports are recommended.

IP Addressing and System ID

Overview

A transparent label provided with the controller can be used to note the IP address and system ID (SRS, System-Rack-Slot) following a modification:

IP_._._._SRS_._._

Default value for IP address: 192.168.0.99

Default value for SRS: 60000.1.0

The ventilation slots in the housing of the Safety PLC must not be covered with the label.

For more information about changing the IP address and system ID, see the XPSMFWIN Software manual.

Note: Each Ethernet board has a unique Ethernet address. It is a 48 bit number: the first 24 bits indicate the manufacturer, while the last 24 bits are a unique number for each Ethernet board/controller-chip assigned by the manufacturer. The number is also called MAC ID.

TCP/IP Description

The IP address is an identifier for a device in a network. IP addresses are 32-bit numbers. To make it easier to memorize them, they are usually expressed in four 8-bit numbers (e.g., 192.168.10.1)

IP addresses are unique, no other device within a network can share the same address:

- the IP address assigned to the PC
- the part of the IP address (the subnet mask) that distinguishes other networks

Note: The operator must ensure that the Ethernet used for Peer-to-Peer communication is adequately protected from unauthorized access (i.e. by hackers). The nature and extent of the measures to be taken must be determined in conjunction with the approval authorities.

SafeEthernet

Overview

This section provides information about SafeEthernet protocol and OSI model.

Description

In the field of automation, requirements, such as determinism, reliability, interchangeability, extensibility, interoperability and the overall safety are central themes. Based on the Ethernet technology, SafeEthernet provides a transfer protocol for transmitting safety-related data up to RC 6 or SIL 3. SafeEthernet implements a mechanism that can detect and react to the following:

- Corruption of transmitted data
- Incorrect address allocation for the messages (transmitter, receiver)
- Incorrect data sequence (repetition, loss, change)
- Incorrect timing (delay, echo)

SafeEthernet is based on the standard Ethernet or FastEthernet according to IEEE 802.3.

The transmission of the safety-related data does not change the protocol frame of the standard Ethernet.

According to the Black Channel Approach in SafeEthernet, "insecure transmission channels" (Ethernet) are used and controlled by safety-related protocol mechanism at transmitter and receiver. This way, regular Ethernet network components, such as hubs, switches, routers, and PCs supplied with network interfaces can be used within a safety-related network. The significant difference to standard Ethernet is determinism, the real-time ability of SafeEthernet.

A special protocol mechanism ensures deterministic behavior even in case faults occur or new communication participants emerge. New components are automatically integrated into the running system. All components of the network could be changed while the system is running. With the use of switches, transmission times can be clearly defined. This way, Ethernet works in real time. Possible transfer speed up to 100Mbit/s for safety-related data is higher than the speed normally used. Copper lines as well as fiber optic cables can be used as transmission media. The terms for safety-related communication have to be considered.

Therefore, only one network for safety and non-safety data transfer is necessary. SafeEthernet can be fitted to existing Ethernet networks with adjustable network profiles. With SafeEthernet, you can set up flexible built-up system structures for decentral automation with defined reaction times. According to the requirements, the intelligence can be centralized or distributed to the participants in a decentral way within the network. There is no limit to the number of safe participants of the network and the amount of transferred safe data to get the needed reaction times. A central controller and the built-up of parallel structures is therefore superfluous.

The transmission of standard and safe data can be integrated into one network. A separate safety bus can be saved. The switches of the safety remote I/O device perform the tasks normally carried out by network switches.

Operation Parameters of the Ethernet Interfaces

Up to COM OS version 8.32 all Ethernet ports of the integrated Ethernet switches have the same settings:

- Autoneg/Autoneg for Speed Mode
- Flow-control Mode

Other settings are not possible and will be rejected by the PLC when loading a configuration.

The Ethernet interfaces 10/100 BaseT of the device have the following parameters:

Firm operating parameters	
Speed Mode	Autoneg
Flow-Control Mode	Autoneg

Other devices combined with the Safety PLC or remote I/O device must have the following network settings:

Admissible settings of other devices	
Speed Mode	Autoneg
Flow-Control Mode	Autoneg
or	
Speed Mode	Autoneg
Flow-Control Mode	Half Duplex
or	
Speed Mode	10 or 100 Mbit/s
Flow-Control Mode	Half Duplex

Non-admissible settings of other devices	
Speed Mode	Autoneg or 10 or 100 Mbit/s
Flow-Control Mode	Full Duplex

For COM OS version > 8.32 and XPSMFWIN Hardware Management version > 7.56.10 each Ethernet port of the integrated switch can be individually configured. See also in the appendix *Connection Diagrams, Examples of Application, and Error Codes, p. 73*.

Connections for SafeEthernet/ Networking Examples

For the networking via SafeEthernet protocol, the devices are equipped - depending on the design - with two connections arranged on the lower side panel of the case. See example of a *Safety-Related Communication, p. 46*.

The various systems can be networked together as required via Ethernet (star or line configuration). A programming unit (PC) can also be connected wherever required.

Note: Ensure that no network loops are formed when connecting systems together. The system must receive data packets along one path only.

Modbus TCP/IP

The Modbus serial slave field bus protocol can communicate with the Modbus TCP/IP protocol via the Ethernet interfaces on the Safety PLC.

Standard Modbus communication transfers the slave address and a CRC checksum in addition to the instruction code and the data. In Modbus TCP/IP the subordinate TCP/IP protocol handles this function.

Note: More information about Modbus TCP/IP protocol can you find in the online help of XPSMFWIN.

Used Network Ports for Ethernet Communication

UDP ports and usage

UDP Ports	Usage
8000	programming and operation with XPSMFWIN
8001	configuration of the remote I/O via PLC
6010	SafeEthernet
6005/6012	if TCS_DIRECT was not activated within HH network

TCP ports and usage

UDP Ports	Usage
502	Modbus (changeable by user)

OSI Model

The model divides the functions of a protocol into a series of layers known as a 'protocol stack' (e.g., TCP/IP stack). Lower layers are implemented in hardware, while higher layers are used in software. Each of the layers is a transport platform for the next higher level and relies on the next lower level.

The following image is a graphic representation of the OSI layers:

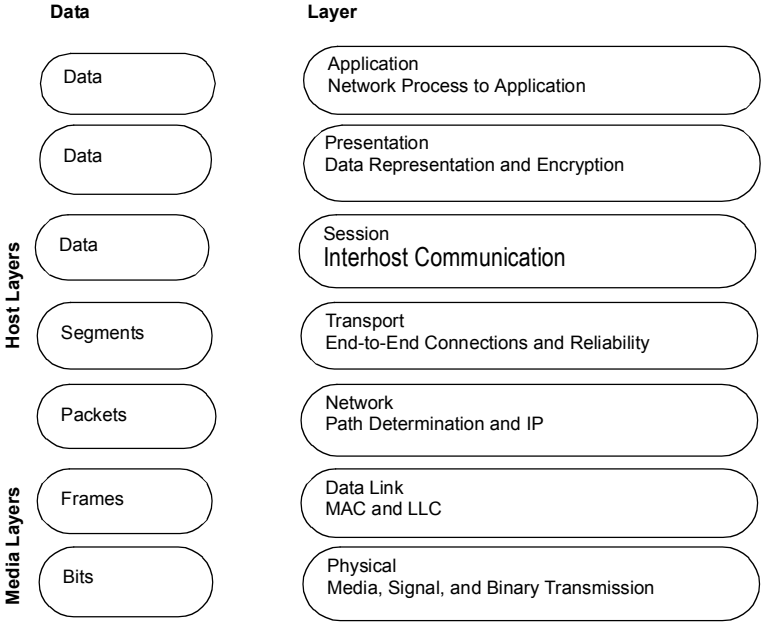

The following table describes the seven OSI layers (bottom-top):

Number	Layer	Data	Description
Media Layers			
1	Physical layer Media, Signal, and Binary Transmission	Bits	Defines all electrical and physical specifications for the devices.
2	Data link layer MAC and LLC	Frames	Provides the functional and procedural means to transfer data between network entities and detect and correct errors that may occur in the Physical layer.
3	Network layer Path Determination and IP	Packets	Provides the functional and procedural means of transferring variable length data sequences from a source to a destination via one or more networks.
Host Layers			
4	Transport layer End-to-End Connections and Reliability	Segments	Provides transparent transfer of data between end users.
5	Session layer Interhost Communication	Data	Provides the mechanism for managing the dialog between end-user application processes.
6	Presentation layer Data Representation and Encryption	Data	Relieves the Application layer of concern regarding syntactical differences in data representation within the end-user systems.
7	Application layer Network Process to Application	Data	Interfaces directly to and performs common application services for the application processes.

Operating Conditions

Overview

The XPSMF3DIO8801 safety remote I/O has been developed in compliance with the requirements of the following standards for EMC, climate and environment:

IEC 61131-2	Programmable Controllers, Part 2, Equipment Requirements and Tests
IEC 61000-6-2	EMC Generic Standards, Part 6-2
IEC 61000-6-4	EMC General Emission Standard, Industrial Environment

To use the XPSMF3DIO8801 safety remote I/O, the following conditions must be fulfilled:

Protection Class	Protection class II according to IEC/EN 61131-2
Pollution	Polution degree II
Altitude	< 2000m (6561.7ft)
Enclosure	Standard: IP 20 If requested by the relevant application standards (e.g., EN 60204, EN 954-1), the device must be installed in a required enclosure (e.g., IP 54).

Climatic Conditions

The most important tests and limit values for climatic conditions are listed in the following table:

EN 61131-2	**Climatic Tests**
	Operating temperature: 0°C (32°F) to 60°C (140°F) (Test limits -10°C (14°F) to +70°C (158°F))
	Storage temperature: -40°C (-40°F) to 85°C (185°F) (with battery only -30°C(-22°F))
6.3.4.2	Dry heat and cold withstand test: 70°C (158°F) / -25°C (-13°F), 96 h, EUT power supply disconnected
6.3.4.3	Change of temperature, withstand and immunity test: -25°C(-13°F) / 70°C (158°F) and 0°C (32°F) / 55°C (131oF), EUT power supply disconnected
6.3.4.4	Cyclic damp heat withstand test: 25°C (77°F) / 55°C (131oF), 95% relative humidity, EUT power supply disconnected

Mechanical Conditions

The most important test and limit values for mechanical conditions are listed in the following table:

EN 61131-2	Mechanical Tests
	Vibration test, operating: 5Hz to 9 Hz / 3.5 mm, 9Hz to 150Hz / 1g
6.3.5.1	Immunity vibration test: 10Hz to 150Hz, 1 g, EUT operating, 10 cycles per axis
6.3.5.2	Immunity shock test: 15g, 11ms, EUT operating, 2 cycles per axis

EMC Conditions

The most important tests and limit values for EMC conditions are listed in the following tables:

EN 61131-2	Noise Immunity Test
6.3.6.2.1 IEC/EN 61000-4-2	ESD test: 4kV contact/ 8kV air discharge
6.3.6.2.2 IEC/EN 61000-4-3	RFI test (10V/m): 26 MHz to 1GHz, 80% AM
6.3.6.2.3 IEC/EN 61000-4-4	Burst test: 2kV power supply / 1kV signal lines
6.3.6.2.4 IEC/EN 61000-4-12	Damped oscillatory wave immunity test: 1kV

IEC/EN 61000-6-2	Noise Immunity Test
IEC/EN 61000-4-6	Radio frequency common mode: 10V 150kHz to 80MHz, AM
IEC/EN 61000-4-3	900MHz pulses
IEC/EN 61000-4-5	Surge: 1kV, 0.5kV

IEC/EN 61000-6-4	Noise Emission Test
EN50011 Class A	Emission test: radiated, conducted

Voltage Supply

The most important tests and limit values for the voltage supply of the equipment are listed in the following table:

IEC/EN 61131-2	Verification of DC Power Supply Characteristics
	The power supply must meet alternatively the following standards: IEC 61131-2 or SELV (Safety Extra Low Voltage) or PELV (Protective Extra Low Voltage).
	Fusing the XPSMF3DIO8801 safety remote I/O device must be performed according to this manual only.
6.3.7.1.1	Voltage range test: 24V DC, -20% to 25% (19.2V DC to 30.0V DC)
6.3.7.2.1	Momentary interruption immunity test: DC, PS 2: 10ms
6.3.7.4.1	Reversal of DC power supply polarity test
6.3.7.5.1	Backup duration withstand test: Test B, 1000 h, Lithium battery is used for backup.

Technical Characteristics

Mechanical Data

Power Supply Connectors 1

Connection diameters, single lead connection	
Without lead end sleeves	Solid 0.2 to 2.5 mm^2 Stranded 0.2 to 2.5 mm^2 AWG 24-12
Stranded with lead and sleeves (without plastic sleeves)	0.25 to 2.5 mm^2 AWG 22-14
Stranded with lead end sleeves (with plastic sleeves)	0.25 to 2.5 mm^2 AWG 22-14

Power Supply Connectors 2

Connection diameters, multiple lead connections (2 leads max, same diameters)	
Without lead end sleeves	Solid 0.14 to 1.5 mm^2 Stranded 0.14 to 1.5 mm^2 AWG 28-16
Stranded with lead and sleeves (without plastic sleeves)	0.25 to 1.5 mm^2 AWG 22-16
Stranded with lead end sleeves (with plastic sleeves)	0.25 to 0.5 mm^2 AWG 22-20

Signal Line Connectors 1

Connection diameters, single lead connection	
Without lead end sleeves	Solid 0.14 to 1.5 mm^2 Stranded 0.14 to 1.5 mm^2 AWG 28-16
Stranded with lead and sleeves (without plastic sleeves)	0.25mm^2 to 1.5 mm^2 AWG 22-16
Stranded with lead end sleeves (with plastic sleeves)	0.25 to 0.5 mm^2 AWG 22-20

Signal Line Connectors 2

Connection diameters, multiple lead connections (2 leads max, same diameters)	
Without lead end sleeves	Solid 0.14 to 0.5 mm^2 AWG 28-20 Stranded 0.14 to 0.75 mm^2 AWG 28-18
Stranded with lead and sleeves (without plastic sleeves)	0.25 to 0.34 mm^2 AWG 22
Stranded with lead end sleeves (with plastic sleeves)	0.5 mm^2 AWG 20

Stripping Length and Torque

Stripping length	9 mm (0.35 in)
Torque	0.22 to 0.25 Nm (1.9 to 2.2 lb-in)

Technical Data

The XPSMF3DIO8801 safety remote I/O device technical data are presented in the following tables:

Interface Ethernet	2*RJ-45, 10/100 Base T with integrated switch
Operating Voltage	24 VDC -15%/+20%, Wss ≤ 15%, from a power supply with protective separation, conforming to IEC 61131-2 requirements
Current Consumption	Max 8 A (with maximum load) Idle current: 0.4 A @ 24 VDC
Operation Temperature	0°C (32°F) to 60 °C (140°F)
Storage Temperature	-40°C (-40°F) to +85 °C (185°F)
Fuse (external)	10 A (Slow blow)
Battery Backup	none
Protection	IP 20
Max. Dimensions	width: 152 mm (5.98in) (with housing screws) height: 114 mm (4.49in) (with latch) depth: 66 mm (2.60in) (with grounding bolt)
Weight	1 kg (2.20lb)

Digital Inputs

Number of Inputs	8 (not electrically isolated)
1-signal: Voltage Current Consumption	15 V to 30 VDC ≥ 2 mA @ 15 VDC
0-signal: Voltage Current Consumption	max. 5 VDC max. 1.5 mA (1 mA @ 5 VDC)
Switching Point	typically 7.5 VDC
Supply	2 outputs to supply sensors for digital inputs, each providing 20 VDC/100mA at mains voltage of 24 VDC, short circuit proof as per IEC61131-2.

Digital Outputs (DO+ and DO-)

Number of Outputs DO+ L+ switching	8 (not electrically isolated) reference pole L-
Number of Outputs DO- L- switching	2 (not electrically isolated) reference pole S+
Output Voltage	≥ L+ minus 2 VDC
Output Current DO+ Output Current DO-	channels 1 to 3 and 5 to 7: 0.5 A @ 60°C channels 4 and 8: 1 A @ 60 °C (2 A @ 40 °C) channels 1 and 2: 1 A @ 60 °C (2 A @ 40 °C))
Max. lamp load: DO+ channel 1-3 and 5-7 DO+ channel 4 and 8 DO- channel 1 and 2	 10 W 25 W 25 W
Max. inductive load: DO+ channel 1-3 and 5-7 DO+ channel 4 and 8 DO- channel 1 and 2	 500 mH 500 mH 500 mH
Minimum Load	2 mA per channel
Internal Voltage Drop	max. 2 VDC @ 2A
Leakage Current (with 0-signal)	max. 1 mA @ 2 VDC
Response to Overload	shutting down relevant outputs with cyclical reconnecting
Total Output Current	max. 7 A (when exceeded, shutdown of all outputs and cyclic reconnection occurs)

Pulsed Outputs

Number of Outputs	2 (not electrically isolated)
Output Voltage	≥ L+ minus 4 V
Output Current	approx. 60 mA
Minimum Load	none
Switching Time	≤ 100 µs
Response to Overload	2 x ≥ 19.2 V, short-circuit current 60 mA @ 24 V

Supply Voltage

The XPSMF3DIO8801 safety remote I/O device is a single voltage system. The required operating voltage is defined as follows in accordance with IEC/EN 61131-2.

Supply voltage	
Nominal value	24 VDC, -15...+20%
Max. permissible function limits in continuous operation	18.5 to 30.2 VDC (including ripple)
Max. peak value	35 VDC for 0.1 s
Permissible ripple	w < 5% as r.m.s. value w_{ss} < 15% as value peak-to-peak
Reference potential	L - (negative pole) Earthing the reference potential is permitted.

Additional Items

Overview

This section lists additional items that can be used with or alongside the XPSMF3DIO8801 safety remote I/O device.

List of Additional Items

- Power Supply Unit-24VDC with protective separation from power supply:
  IEC 61131-2
  Product ranges: ABL7RE or ABL8RP
  Location: www.telemecanique.com
- Suitable DIN Rail for mounting the controller
  AM1** range of DIN rail is acceptable and can be found under the Cable and Wiring Accessories in Control and Connection Components Catalog.
- OtherSafe PLC controllers and IO
  - XPSMF60** The XPSMF60 controller is a modular PES in a rack system housing. The controller is able to house up to six of the folowing modules (see the table below). The number of times a particular module is used in the XPSMF60 is not restricted.
  - XPSMF3DIO** Remote Input and Output modules. The number of inputs and outputs may vary depending on the model.
  - XPSMF2DO** Remote Output Module. The number of outputs varies.
  - XPSMF1DI1601 Remote Input Module with 16 digital outputs.
- Safety Modules Various safety modules and safety controllers (see Machine Safety in the Essential Guide). Module functions range from emergency stop to light curtain monitoring.
- Standard Controllers: Non-Safety data transfer (see Automation, automation and Control, Essential Guide, 2005). Standard controllers operate both large and small machinery. Ranges: Twido, Micro, Premium, and Quantum.
- Safety Devices Switches and Actuators:
  - Coded Magnetic Switches, Limit Switches, Rotary Lever or spindle, Emergency Stops, Foot Switches, Switch Disconnectors
  - Mat
  - Light Curtains
  - 2 Hand Control units
  - Motor Starters

  (See Safety section or the Essential Guide for more details.)

- Human Machine Interface Devices (to increase safety awareness)
  - Pushbuttons and Pilot Lamps
  - Beacons
  - Sirens
  - Magelis Displays

  (See Operator Dialog section of the Essential Guide for more information.)

Note: All the catalogs and guides are available at http://www.telemecanique.com.

Appendices



At a Glance

Overview

Additional information that is not necessarily required to understand the documentation.

What's in this Appendix?

The appendix contains the following chapters:

Chapter	Chapter Name	Page
A	Connection Diagrams, Examples of Application, and Error Codes	73

Connection Diagrams, Examples of Application, and Error Codes

A

At a Glance

Overview

This chapter contains connection diagrams, examples of application, and error codes.

What's in this Chapter?

This chapter contains the following topics:

Topic	Page
Error Codes	74
Wiring Examples	78
Configuration of Ethernet Interfaces	81

Error Codes

Description of Error Codes

The error codes listed in this section appear in XPSMFWIN programming environment.

Digital inputs XPSMF3DIO8801

System Signal	R/W	Meaning	
Module.SRS [UDINT]	R	slot number (system-rack-slot)	
Module.Type [UINT]	R	type of module, setpoint: 0x00A5 [165 $_{dez}$]	
Module.Error Code [WORD]	R	error codes of the module	
		0x0000	I/O processing, may be with faults, see further error codes
		0x0001	no I/O processing (CPU not in RUN)
		0x0002	no I/O processing during start-up tests
		0x0004	manufacturer interface in operation
		0x0010	no I/O processing: incorrect configuration
		0x0020	no I/O processing: error rate exceeded
		0x0040/0x0080	no I/O processing: configured module not inserted
DI.Error Code [WORD]	R	error codes for all digital inputs	
		0x0001	error in the digital input range
		0x0002	FTZ test of test pattern failed
DI[xx].Error Code [BYTE]	R	error codes of the digital input channels	
		0x01	error in digital input module
		0x10	short-circuit of the channel
		0x80	Line interrupt between pulsed output TO and pulsed input DI e.g. • line break • open switch • L+ undervoltage
DI[xx].Value [BOOL]	R	input value of the digital input channels **0** input is not set **1** input is set	
DI No. of Pulse Channel [USINT]	W	number of pulsed outputs (feed outputs) **0** no pulsed outputs provided for line control **1** pulsed output 1 provided for line control **2** pulsed output 1 and 2 provided for line control **CAUTION:** Pulsed outputs must not be used as safety-related outputs!	
DI Pulse Slot [UDINT]	W	Pulse module slot (line control), value has to be set to 3	

System Signal	R/W	Meaning
DI[xx].Pulse Channel [USINT]	W	source channel of the pulse feed **0** input channel **1** pulse from 1st TO channel **2** pulse from 2nd TO channel
DI Pulse Delay [10E-6 s] [UDINT]	W	waiting time for line control (short-circuit-proof)

Digital outputs XPSMF3DIO8801

System Signal	R/W	Meaning	
Module.SRS [UDINT]	R	slot number (system-rack-slot)	
Module.Type [UINT]	R	type of module, setpoint: 0x005B [91 $_{dez}$]	
Module.Error Code [WORD]	R	error codes of the module	
		0x0000	I/O processing, may be with faults, see further error codes
		0x0001	no I/O processing (CPU not in RUN)
		0x0002	no I/O processing during start-up tests
		0x0004	manufacturer interface in operation
		0x0010	no I/O processing: incorrect configuration
		0x0020	no I/O processing: error rate exceeded
		0x0040/0x0080	no I/O processing: configured module not inserted
DOy.Error Code [WORD] y = 1 or 2	R	error codes for all digital outputs	
		0x0001	error in the digital output range
		0x0002	MEZ test of safety shutdown failed
		0x0004	MEZ test auxiliary supply failed
		0x0008	FTZ test of test pattern failed
		0x0010	MEZ test of test pattern of the output switch failed
		0x0020	MEZ test of test pattern of the output switch (disconnection test of outputs) failed
		0x0040	MEZ test, active disconnection via WD failed
		0x0200	all outputs switched off, total current exceeded
		0x0400	FTZ test: 1. temperature threshold exceeded
		0x0800	FTZ test: 2. temperature threshold exceeded
		0x1000	FTZ test: monitoring of auxiliary supply 1: undervoltage
DOy[xx].Error Code [BYTE] y = 1 or 2	R	error codes of the digital output channels	
		0x01	error in digital output module
		0x02	output switched off due to overload
		0x04	error when reading back the activation of the digital outputs
		0x08	error when reading back the status of the digital outputs
		0x40	external short-circuit or short-circuit of EMC protection causes an error
		0x80	channel is switched off due to an error in the corresponding DO channel

System Signal	R/W	Meaning
DOy[xx].Value [BOOL] y = 1 or 2	W	output value of the digital output channels **0** output is not set **1** output is set
DO2[xx].2-pole [BOOL]	W	parameterization whether the channel is used in a 2-pole manner **1** channel DO2[01] is used in a 2-pole manner together with channel DO1[04]; or channel DO2[02] is used in a 2-pole manner together with channel DO1[08] **0** channel DO2[xx] is not used in a 2-pole manner
Switch-on Delay [UINT]	W	switch-on delay for 2-pole tests, due to lamp load, inductive and capacitive load, range 0...30 ms, 1 ms steps

Pulsed outputs XPSMF3DIO8801

System Signal	R/W	Meaning	
Module.SRS [UDINT]	R	slot number (system-rack-slot)	
Module.Type [UINT]	R	type of module, setpoint: 0x00B5 [91 $_{dez}$]	
Module.Error Code [WORD]	R	error codes of the module	
		0x0000	I/O processing, may be with faults, see further error codes
		0x0001	no I/O processing (CPU not in RUN)
		0x0002	no I/O processing during start-up tests
		0x0004	manufacturer interface in operation
		0x0010	no I/O processing: incorrect configuration
		0x0020	no I/O processing: error rate exceeded
		0x0040/0x0080	no I/O processing: configured module not inserted
DO.Error Code [WORD]	R	error codes of the complete digital pulsed output module	
		0x0001	error of the complete digital pulsed output module
DO[xx].Error Code [BYTE]	R	error codes of a single digital pulsed output	
		0x01	error of a single pulsed digital output
DO[xx].Value [BOOL]	W	output value of digital pulsed output channels **0** output is not set, no current **1** output is set **CAUTION:** Pulsed outputs must not be used as safety-related outputs!	

Wiring Examples

SafeEthernet Protocol and Ethernet Wiring Example

The following scheme shows an example of Ethernet and SafeEthernet protocol networking:

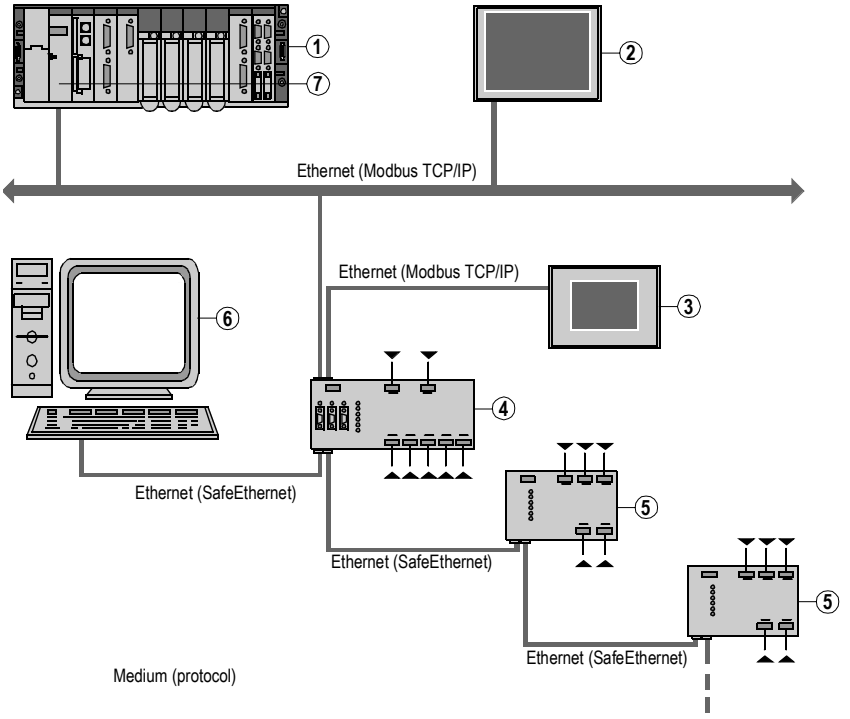

Elements of the network

No.	Element
1	Atomation Platform Premium PLC
2	Magelis Graphic Terminal
3	Magelis Graphic Terminal
4	XPSMF30 Safety PLC
5	XPSMF 1/2/3 DIO/AIO Remote I/O
6	PC
7	TSX ETY100 (Modbus TCP/IP) Module

The above application shows the communication between a Safety PLC and a Premium PLC over Ethernet (Modbus TCP/IP protocol) and Ethernet using SafeEthernet protocol. The data exchange between the Safety PLC and the Premium PLC is non-safety data transfer. The two systems can work together sending and receiving data in both directions using Modbus TCP/IP protocol. In this case, it allows non-safe data transfer over Ethernet through the Safety PLC.

Now, the data from a safety-related input can control a safety output within the Safety PLC system and a non-safety output through the Premium PLC system. The PLC system can transmit its non-safe data over Ethernet controlling a non-safety-related output. This allows the cabling system to be used to transfer both safe and non-safe data.

Ethernet Wiring Example

The following scheme shows an example of SafeEthernet protocol and Modbus protocols networking:

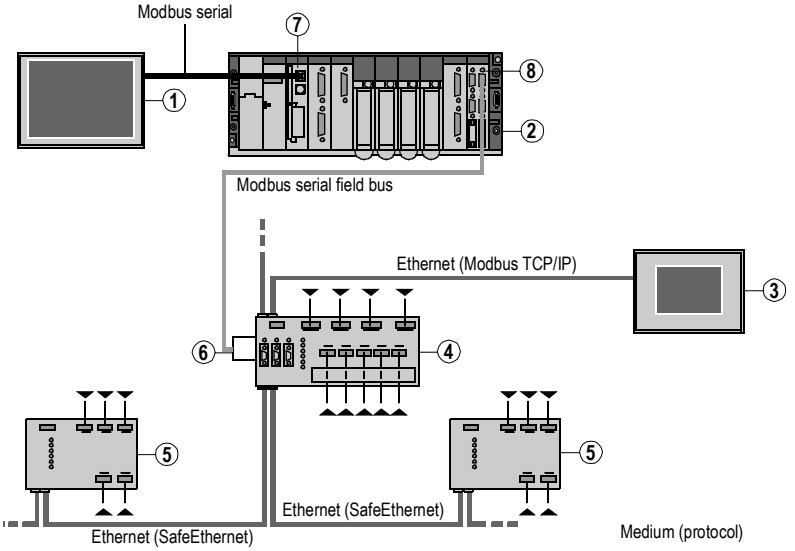

Elements of the network

No.	Element
1	Magelis Graphic Terminal
2	Automation platform 'Premium'
3	Magelis Graphic Terminal
4	XPSMF30 Safety PLC
5	XPSMF 1/2/3 DIO/AIO
6	XPSMF ADAPT
7	TER Connection on Premium Processor
8	TSXSCY21601 Modbus Serial Module

The application above shows the combination of a Safety PLC system and a Premium PLC system connected via Modbus serial. The data exchange between the Safety PLC system and the Premium PLC system over Modbus serial is non-safe data transfer. The communication allows the two systems to work together. The PLC system can send the non-safe data over to the Safety PLC. The Safety PLC can transmit the non-safety-related data over Ethernet protocol to one of the safety remote I/O modules. The module can control a non-safety-related output. This enables the use of a single transmission line over large distances for safe and non-safe data transfer.

Configuration of Ethernet Interfaces

Communication Settings

For setting the communication parameters proceed as follows:

Step	Action
1	Open the **Extended** tab.
2	In the **Speed Mode** list, select **Autoneg**.
3	In the **Flow-Control Mode** list, select **Autoneg**.
4	Select the **Activate Extended Settings** check box. **Result:** The selected parameters are activated. 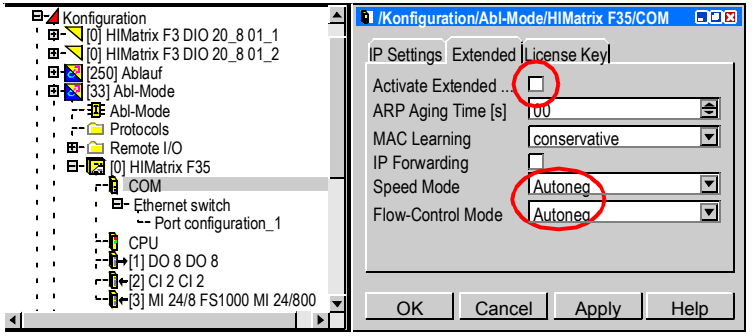 **Note:** The parameters of the **Extended** tab are explained in detail in the online help of XPSMFWIN.

Port Settings

The port settings of the integrated switch can be parameterized individually from COM OS version > 8.32 and XPSMFWIN Hardware Management version > 7.56.10. Using the context menu of the communication **COM** settings select **Ethernet switch** → **New** → **Port configuration**. A configuration menu can be established for each switched port.

Setting a port configuration

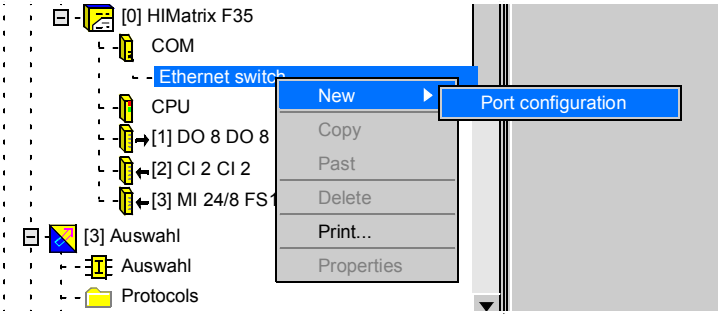

Parameters of a port configuration

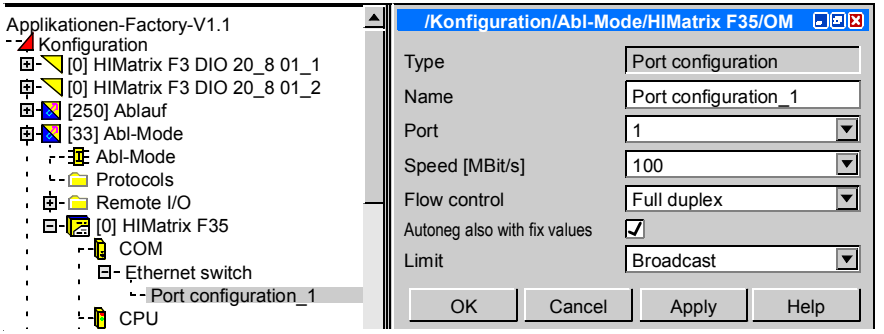

The following table contains the parameter descriptions:

Parameter	Description
Port	Port number, as assigned on device. **Note:** Only 1 configuration is possible per port. **Value range** 1...n, depending on the resource
Speed [MBit/s]	The following selections are available: **10 MBit/s** data rate 10 MBit/s **100 MBit/s** data rate 100 MBit/s **Autoneg (10/100)** automatic setting of the baud rate The default setting is **Autoneg**.
Flow control	The following selections are available: **Full duplex** communication in both directions at the same time **Half duplex** communication in one direction **Autoneg** automatic control of communication The default setting is **Autoneg**.
Autoneg also with fix values	The *Advertising* (transfer of **Speed** and **Flow control** properties) is made with fixed parameter values. Thereby other devices, whose port settings are **Autoneg**, can recognise how the PLC ports are set.
Limit	Limit incoming Multicast and/or Broadcast packages. The following selections are available: **Off** no limit **Broadcast** limit Broadcast (128 kbit/s) **Multicast and Broadcast** limit Multicast and Broadcast (1024 kbit/s) The default setting is **Broadcast**.

Activation of Settings

Parameters are set in the **COM** window of the Hardware Management screen. Before the changes/settings become active the application program must be compiled using the Code Generator and then transferred to the PLC(s). The communication properties can be changed in the online mode using the Control Panel. The settings become active immediately, but are not transferred to the application program.

Glossary

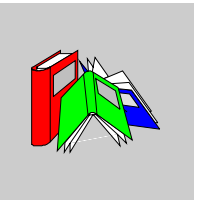

A

AWG american wire gage (wire diameter)

C

COM communication module

CPU central processing unit

D

DI digital input

DIO digital input/output

DO digital output

E

EMC	electromagnetic compatibility

F

FB	field bus
FBD	functional block diagram
FTT	fault tolerance time
FTZ	see FTT

I

IEC	international electrotechnical commission

L

LC	line control

M

MEZ	see MFOT
MFOT	multi-fault occurrence time

N

NSP	non-safety-related protocol

O

OLE	object linking and embedding
OSI Model	open system interconnection model

P

PELV	protective extra low voltage
PES	programmable electronic system

R

R	read
R/W	read/write
RC	requirement class

S

SELV	safety extra low voltage
SFC	sequential function chart
SIL	safety integrity level (according to IEC 61508)
SRS	system-rack-slot

T

TMO	timeout

W

W	write
WD	watchdog
WDT	watchdog time

Index

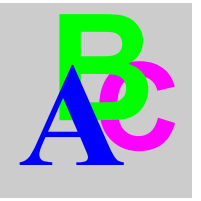

A

additional items, 69
air circulation, 15
application, 25

B

block diagram, 26

C

cable disconnection, 35
climatic conditions, 61
communication, 46
configuration
    Ethernet interfaces, 81
connections for SafeEthernet, 58

D

description of error codes, 74
diagnostics, 37
dimensions, 11

E

EMC conditions, 62
equipment description, 41
error codes, 74
Ethernet
    configuration, 81
Ethernet communication
    used network ports, 58
Ethernet wiring, 53
Ethernet wiring example, 80

F

first power-up, 24
front view, 10, 42
function, 26

H

heat, 18
housing elements, 42

I

initial operation, 24
installation, 13
interface elements, 53
internal convection, 20
introduction, 10
IP addressing and system ID, 55

L

large system reconfiguration, 36
LED description, 51
LEDs, 50
line control, 27
list of additional items, 69

M

maintenance, 39
mechanical conditions, 62
mechanical data, 64
Modbus TCP/IP, 58
mounting the remote I/O, 14

O

operating conditions, 61
operation parameters of the Ethernet Interfaces, 57
OSI model, 59

P

power supply connectors, 64
power supply interruption, 36
procedure, 13
pulsed outputs, 34

R

repair of remote I/O modules, 39
replacing faulty modules, 38
representation, 10
reset button, 45
RJ45 connector, 54

S

SafeEthernet, 56
SafeEthernet protocol wiring example, 78
safety-related communication, 46
safety-related digital inputs, 29
safety-related digital outputs, 31
short-circuit characteristics of the output channels, 37
signal line connectors, 64, 65
small system reconfiguration, 36
specified cables, 54
stripping length and torque, 65
supply voltage, 68
switches, 54

T

TCP/IP description, 55
technical characteristics, 64
technical data, 66
temperature state/operating temperature, 21
testing the inputs and outputs for interference voltage and earth faults, 38

U

using reset button, 45

V

voltage supply, 63

W

wiring, 53
wiring examples, 78