XPSMF40
Hardware Manual

07/2007



a brand of Schneider Electric

Telemecanique

33003363.02

Table of Contents

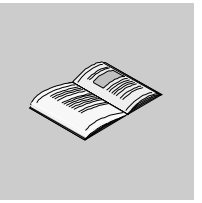

Safety Information 5

About the Book 7

Chapter 1 Overview: XPSMF40 9
At a Glance 9
Introduction 10
Representation 11
Dimensions 14
Installation 16

Chapter 2 Application and Function 21
At a Glance 21
Initial Operation 22
Application 23
Function 24
Offline Proof-Test 39

Chapter 3 Equipment Description 41
At a Glance 41
Housing Elements 42
Reset Button 45
LEDs 46
Operating Conditions 50
Technical Characteristics 53
Additional Items 58

Chapter 4 Safety-Related Communication 61
At a Glance 61
4.1 Safety-Related Communication 63
At a Glance 63
SafeEthernet 64
Function 66
OSI Model 68
Technical Characteristics 70
Networking Example 72

Chapter 5 Non-Safety-Related Communication 77
At a Glance 77
5.1 Communication via Modbus Serial Line 79
At a Glance 79
Modbus Serial Line (SL) 80
Wiring 81
Technical Characteristics 83
Functions 85
Modbus SL RJ-45 Socket 87
Wiring Example via RJ-45 88
Wiring Example via Junction Boxes 91
Connection onto Screw Terminals 95
5.2 Communication via Modbus TCP/IP 97
At a Glance 97
Modbus TCP/IP 98
Wiring Example With SafeEthernet 99
5.3 Communication via Profibus DP 101
At a Glance 101
Profibus DP 102
Function 103
Profibus DP SUB-D9 Connector 104
Wiring Example 105
Profibus DP Configuration Using Sycon 2.9 107
Profibus DP Configuration Using Unity Pro XL V2.1 121

Appendices 125
At a Glance 125

Appendix A Error Codes 127
List of Error Codes 127

Glossary 131

Index 135

Safety Information

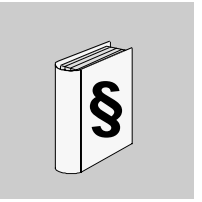

Important Information

NOTICE

Read these instructions carefully, and look at the equipment to become familiar with the device before trying to install, operate, or maintain it. The following special messages may appear throughout this documentation or on the equipment to warn of potential hazards or to call attention to information that clarifies or simplifies a procedure.



The addition of this symbol to a Danger or Warning safety label indicates that an electrical hazard exists, which will result in personal injury if the instructions are not followed.



This is the safety alert symbol. It is used to alert you to potential personal injury hazards. Obey all safety messages that follow this symbol to avoid possible injury or death.

⚠ DANGER

DANGER indicates an imminently hazardous situation, which, if not avoided, **will result** in death or serious injury.

⚠ WARNING

WARNING indicates a potentially hazardous situation, which, if not avoided, **can result** in death, serious injury, or equipment damage.

⚠ CAUTION

CAUTION indicates a potentially hazardous situation, which, if not avoided, **can result** in injury or equipment damage.

PLEASE NOTE Electrical equipment should be installed, operated, serviced, and maintained only by qualified personnel. No responsibility is assumed by Schneider Electric for any consequences arising out of the use of this material.

© 2007 Schneider Electric. All Rights Reserved.

About the Book

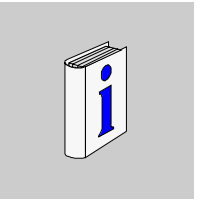

At a Glance

Document Scope

This manual describes the XPSMF40 Safety Programmable Logic Controller (PLC).

The following descriptions of the XPSMF40 Safety PLC are included in this manual:

- dimensions and installation
- application and function
- equipment description
- safety-related and non-safety-related communication with application examples

Validity Note

The XPSMF40 Safety PLC has been tested and certified by TÜV for functional safety in accordance with CE and the standards listed below:

- TÜV Anlagentechnik GmbH Automation, software, and information technology Am Grauen Stein 51105 Köln
- Certificate and test report Safety-related automation devices
- International standards
  - IEC 61508, parts 1-7: 2000, up to SIL 3
  - EN 954-1: 1996, up to Category 4
  - EN 298: 1994
  - NFPA 8501:1997
  - NFPA 8502: 1999
  - EN / IEC 61131-2: 1994 and A11: 1996, A12: 2000
  - EN / IEC 61000-6-2: 2000, EN 50082-2: 1996, EN 50081-2: 1993
  - EN 54-2: 1997
  - NFPA 72: 1999
- National standards
  - DIN VDE 0116: 1989, prEN 50156-1: CDV 2000

The corresponding programming environment is XPSMFWIN. The software is executable in the Microsoft Windows 2000/XP. The software helps you to create safety-related programs and operate the Programmable Electronic System (PES).

Note: The declaration of conformity is provided within the hardware product's packaging. All devices are labelled with the CE sign.

Related Documents

Title of Documentation	Reference Number
Safety Suite V2 Installation Instruction	33003529
XPSMFWIN Software User Manual	33003788
XPSMF40 / 60 Safety Manual	33003792

You can download these technical publications and other technical information from our website at *www.telemecanique.com*.

Product Related Warnings

Schneider Electric assumes no responsibility for any errors that may appear in this document. If you have suggestions for improvements or amendments or have found errors in this publication, please notify us.

No part of this document may be reproduced in any form or by any means, electronic or mechanical, including photocopying, without express written permission of Schneider Electric.

All pertinent state, regional, and local safety regulations must be observed when installing and using this product. For reasons of safety and to ensure compliance with documented system data, only the manufacturer should perform repairs to components.

Failure to use Schneider Electric software or approved software with our hardware products may result in injury, harm, or improper operating results.

Failure to observe this product's safety-related warning can result in injury or equipment damage.

User Comments

We welcome your comments about this document. You can reach us by e-mail at techpub@schneider-electric.com

Overview: XPSMF40

1

At a Glance

Overview

This chapter contains an overview of the XPSMF40 Safety PLC.

What's in this Chapter?

This chapter contains the following topics:

Topic	Page
Introduction	10
Representation	11
Dimensions	14
Installation	16

Introduction

XPSMF40 Safety PLC

XPSMF40 is a programmable Safety PLC designed to monitor safety functions up to safety Category 4 according to EN 954-1 and SIL 3 according to IEC 61508. XPSMF40 is a compact programmable electronic system (PES) in a plastic housing with

- 24 programmable digital inputs / outputs,
- 8 pulsed outputs

There are 6 versions of the XPSMF40 supporting different functions:

XPSMF Version	SafeEthernet Protocol	Modbus Serial Line Slave Interface	Profibus DP Slave Interface	Modbus TCP Server
4000	X	–	–	–
4002	X	–	–	X
4020	X	X	–	–
4022	X	X	–	X
4040	X	–	X	–
4042	X	–	X	X

X XPSMF40 version supports this feature

– XPSMF40 version is not supporting this feature

The Safety PLC is a highly visible product thanks to its red color front plate. The product's overall ingress protection rating is IP 20. The XPSMF40 is an extremely versatile product and can be used in all areas of a factory floor. In areas where conditions are harsh, explosive or generally dangerous, extra protection in the form of enclosures is available to optimize the product's performance, prolong its life, and increase a level of safety within each factory environment. The XPSMF40 is a very powerful Safety PLC and is very easy to program and install.

Representation

Overview

This section provides images of the different versions of the XPSMF40 Safety PLC.

Front View XPSMF4000 / 4002

The following image shows the front view of the XPSMF4000 and the XPSMF4002:

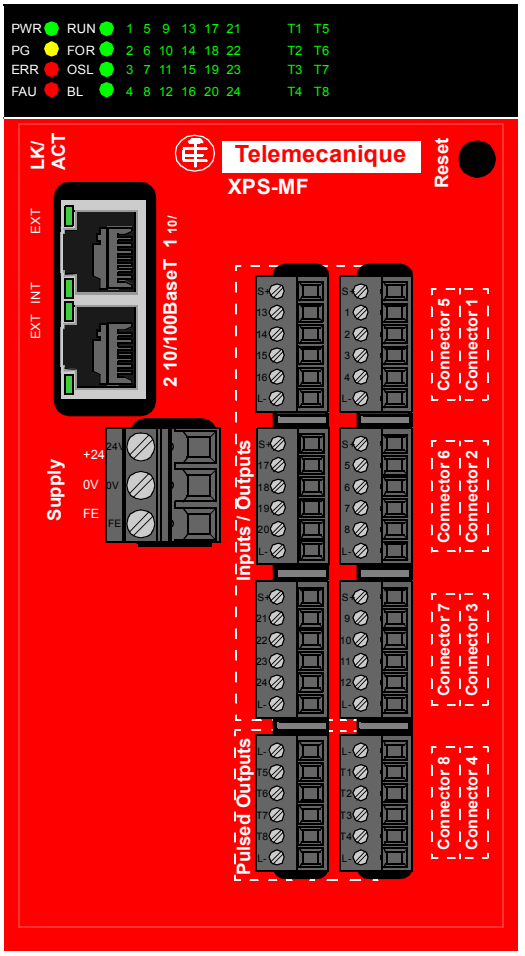

Front View XPSMF4020 / 4022

The following image shows the front view of the XPSMF4020 and the XPSMF4022:

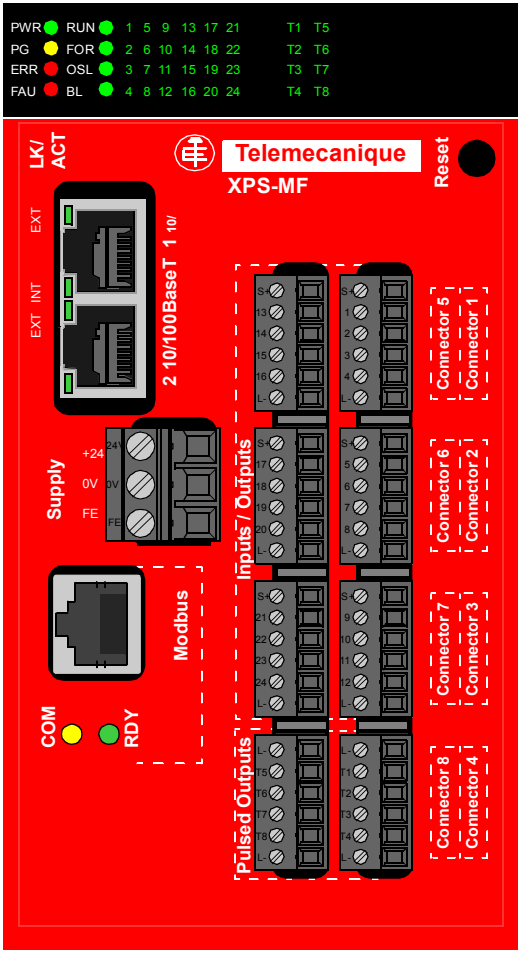

Front View XPSMF4040 / 4042

The following image shows the front view of the XPSMF4040 and the XPSMF4042:

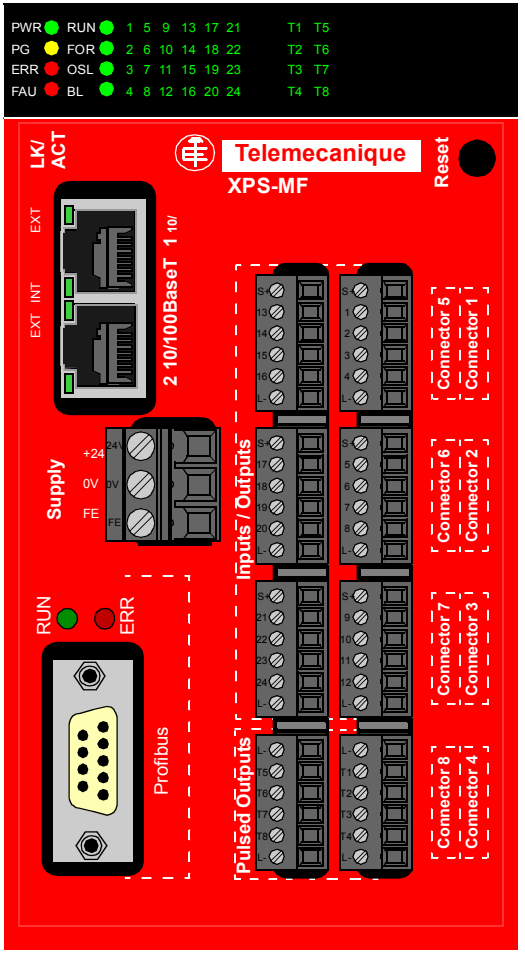

Dimensions

Overview

The following section contains information about the dimensions of the XPSMF40 Safety PLC showing the front and side views of the Safety PLC.

Front View Dimensions

The following image shows the front view dimensions of the XPSMF40 Safety PLC:

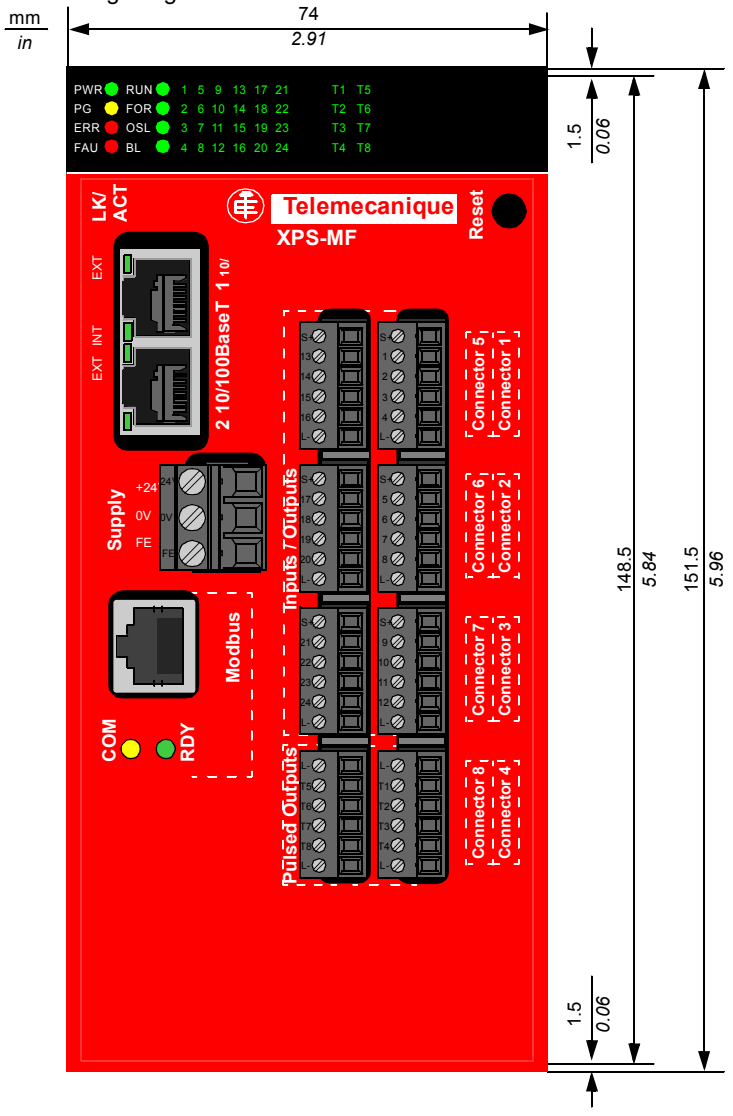

Side, Front and Back View Dimensions

The following image shows the side, front and back view dimensions of the XPSMF40 Safety PLC:

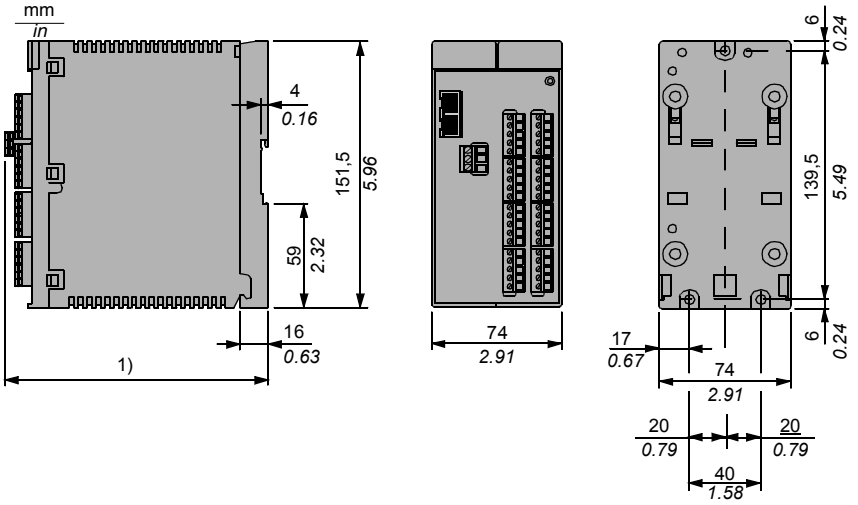

1 153 mm (6.02 in) with XPSMCTS•
151.4 mm (5.96 in) with XPSMCTC•

Installation

Assembly on a 35 mm DIN Rail

35 mm (1.37 in) DIN rail and wall installation

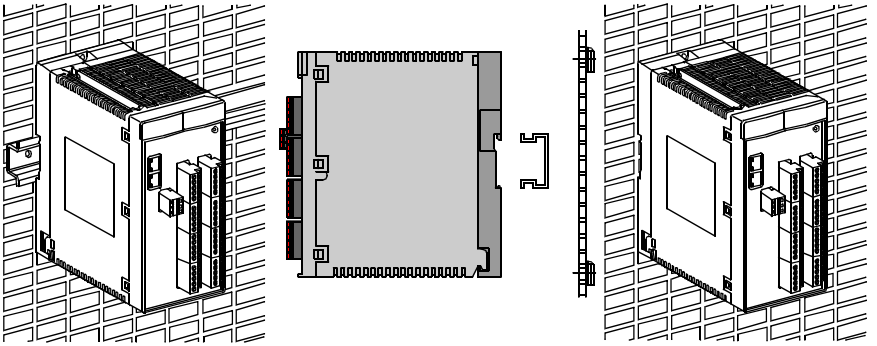

⚠ WARNING

INADEQUATE THERMAL CLEARANCE HAZARD

Follow the mounting instructions to ensure proper spacing that will allow natural convection to take the heat away from the safety PLC.

Failure to follow these instructions can result in death, serious injury, or equipment damage.

Disassembling from 35 mm (1.37 in) DIN rail

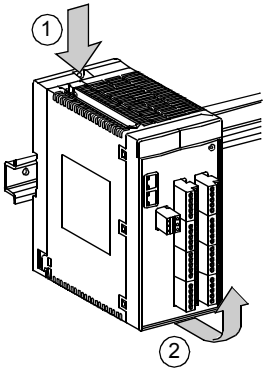

Note: The XPSMF40 is grounded through an attachment plate or a DIN rail.

Requirements

The safety PLC should be air-cooled by natural convection. To facilitate ventilation, install it vertically with the ventilation louvers on the top and on the bottom.

If several PLCs are installed on the same rack, it is recommended that the following provisions are observed:

- Leave a free space of at least 150 mm (5.90 in) for the ducts, wiring, and air circulation above and below two neighboring PLCs.
- Install heat-generating devices (transformers, supply modules, power switches, etc.) above the PLCs.

Disassembly of the Upper Housing

Removal of the upper housing section from the mounting plate (torque value = 1.1 Nm (9.7 lb-in)).

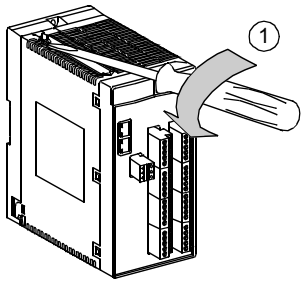

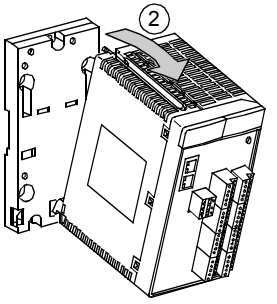

Assembly of the upper housing section on to the mounting plate (torque value = 1.1 Nm (9.7 lb-in)).

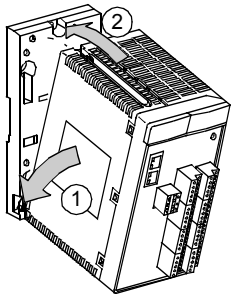

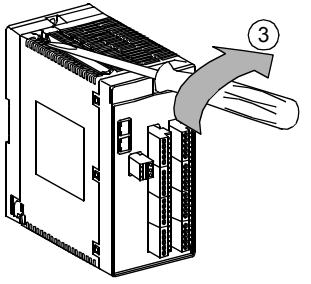

Internal Convection

Due to internal heat convection, the heat is dissipated outside through the walls of the housing. This is possible when the ambient temperature is lower than the temperature inside the housing.

The following table describes the variables used to calculate the internal convection:

Variable	Description
P_v [W]	heat output (heat dissipation) of the electronic components
A [m^2] */ [ft^2]	effective surface area of the housing
k [W/m^2 K]*	the housing heat transfer coefficient

* (1 m^2 = 10.76 ft^2)

The maximum temperature increase of all electronic devices inside the housing is calculated as follows:

$$(\Delta T)max = \frac{Pv}{k \bullet A}$$

The power dissipation P_v can be calculated based on the values of the electrical power of the safety PLC, its inputs, and outputs.

Temperature State/Operating Temperature

The PLCs are designed to operate with the maximum temperature of 60 °C (140 °F). The temperature states in single modules and PLCs are evaluated by the CPU module or the PLC's CPU for compact systems. The temperature state of a particular module or PLC is measured by a sensor. The sensor monitors the temperature state of the PLC automatically and continuously.

The following table shows the ranges in which the temperature state signals the measured temperature:

Temperature Range	Temperature State (System With Full Load)
<45 °C (<113 °F)	normal
60 to 70 °C (140 to 158 °F)	high temperature
>70 °C (>158 °F)	very high temperature
Return to 64 °C (147.2 °F)	high temperature
Return to <54 °C (<129.2 °F)	normal

Note: The difference in temperature increase and decrease ranges is due to the sensor's hysteresis that equals 6 °C (10.8 °F).

High Temperature

Temperature state **High temperature** indicates the following:

operating temperature = max temperature (delta T) max + ambient temperature >= 60 ^{o}C (140 °F)

In this case, support the internal convection by adding air grilles or increasing the free space between the PLCs.

Very High Temperature

Temperature state **Very high temperature** indicates the following:

operating temperature = max temperature (delta T) max + ambient temperature >= 70 ^{o}C (158 °F)

In this case, support the internal convection by integrating additional active cooling elements (fan, coolant devices, etc.) or increasing the free space around the PLCs.

If the sensor indicates a temperature increase above the critical threshold, the temperature state changes. The temperature states can be evaluated using the **Temperature State** system signal of the XPSMFWIN programming environment.

Application and Function

2

At a Glance

Overview

This chapter describes the application and function of the XPSMF40 Safety PLC.

What's in this Chapter?

This chapter contains the following topics:

Topic	Page
Initial Operation	22
Application	23
Function	24
Offline Proof-Test	39

Initial Operation

Overview

The following section contains information about the initial operation of the XPSMF40 Safety PLC.

First Power-Up

The following table describes the first power-up behavior of the XPSMF40 Safety PLC:

Stage	Description
1	PWR LED (green) is illuminated.
2	All LEDs are illuminated for 5 s.
3	PG LED (yellow) is flashing. The Safety PLC is awaiting a program.

Connection with Existing Configuration and Program

The following table describes the behavior of the XPSMF40 Safety PLC when it is connected for the first time to an existing configuration and program:

Stage	Description
1	PWR, OSL, BL LEDs (green) are illuminated for approx. 0.5 s.
2	All LEDs (except the I/O LEDs) are illuminated for 5 s.
3	PG LED (red) is flashing for 20 s. PWR LED is illuminated.
4	Program is checked. ● Autostart enabled: RUN LED (green) is illuminated. ● Autostart disabled: RUN LED is flashing Start the system manually via control panel.

⚠ DANGER

HAZARD OF ELECTRICAL SHOCK, EXPLOSION OR ARC FLASH

Disconnect all power before servicing equipment.

Failure to follow these instructions will result in death or serious injury.

Application

Overview

The XPSMF40 Safety PLC is certified to the following standards:

- SIL 3, according to IEC 61508
- Category 4, according to EN 954-1
- EN/IEC 61131-2
- prEN 501156
- DIN V 19250 up to RC 6
- NFPA 8501, NFPA 8502
- EN 54-2: 1997
- NFPA 72: 1999

The extensive hardware range and safe data transmission allow the system to be optimized to suit anticipated or existing plant structures.

The safety-related networking of the Safety PLC takes place on Ethernet, which is based on standard Ethernet technology and is certified to TÜV/BG. Using the SafeEthernet protocol, the Ethernet medium allows safety data to be transmitted at 100 Mbit/s (half duplex) and 10 Mbit/s (full duplex) and supports the use of the entire range of Ethernet functions for networked applications.

A combination of a high-speed Safety PLC and a high-speed safety bus protocol (SafeEthernet) offers new levels of flexibility for automation process solutions.

Today's system limits of safety-related automation concepts are disappearing. Scope is being created for truly application-based solutions.

Key features of the XPSMF40 Safety PLC are

- certification up to SIL 3, according to IEC 61508.
  Category 4, EN 954-1
- safety-related communication via SafeEthernet
- Field bus communications available for non-safety data transfer include: Profibus DP, Modbus SL and Modbus TCP/IP
- versatility (You can use the Safety PLC in all environmental conditions with additional equipment.)
- quick and easy network configuration
- user-friendly interfaces
- use with fire alarm systems

Function

Overview

This section describes the functions of the XPSMF40 Safety PLC.

Block Diagram XPSMF4000 / 4002

The following is a block diagram of the XPSMF40 Safety PLC versions 4000 and 4002:

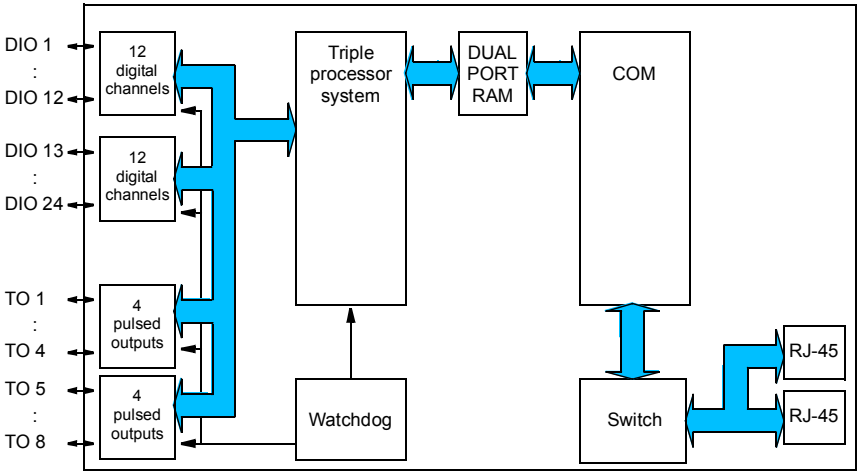

Block Diagram XPSMF4020 / 4022

The following is a block diagram of the XPSMF40 Safety PLC versions 4020 and 4022 providing an additional RJ-45 interface (Modbus) for Modbus SL connection:

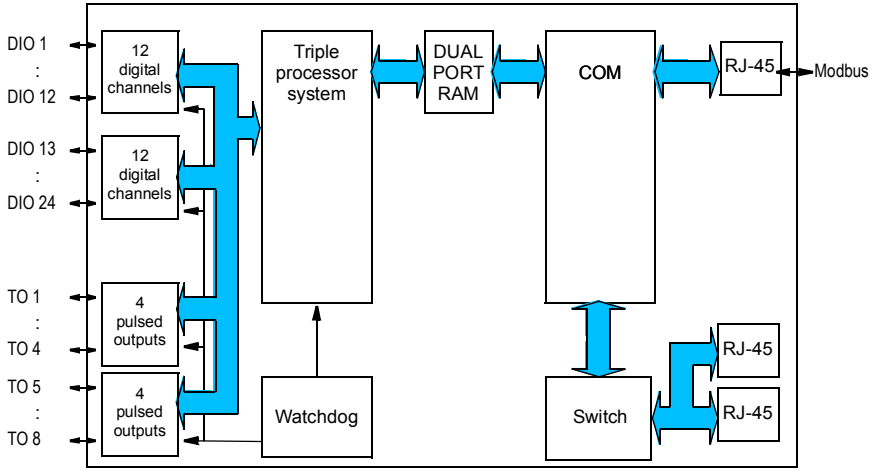

Block Diagram XPSMF4040 / 4042

The following is a block diagram of the XPSMF40 Safety PLC versions 4040 and 4042 providing an additional SUB-D9 (Profibus) interface for Profibus DP connection:

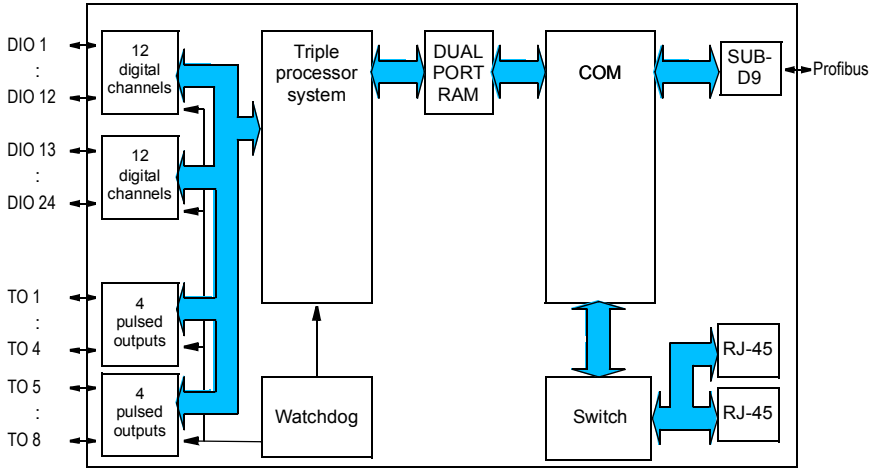

Block Diagram Description

The following table describes the components of the diagrams:

Item	Description
Inputs / Outputs	24 digital channels, configurable as inputs or outputs via XPSMFWIN programming environment
Pulsed Outputs	Pulsed outputs must not be used as standard outputs. For further information see *Line Control, p. 27*.
Triple Processor System	Each processor processes the same data and is compared.
Watchdog	The watchdog control unit monitors cycle time.
Dual Port RAM	contains the PES memory
COM	is integrated in all XPSMF40 versions
Switch	4-port switch with a built-in **auto cross-over** function, which allows using both the 1:1 and cross-over cables.
RJ-45	• 2 RJ-45 Ethernet sockets are integrated in all XPSMF40 versions • Versions XPSMF4020 and XPSMF4022: 1 additional RJ-45 Modbus Serial Line slave interface
SUB-D 9	Versions XPSMF4040 and XPSMF4042: 1 SUB-D 9 Profibus DP Serial Slave interface

Line Control

Line Control is a short-circuit and line break monitoring system, e.g., for Emergency Stop Control (category 4, according to EN 954-1), which can be configured on the XPSMF40 system. Digital outputs TO[1] to TO[8] can be connected to the DI digital inputs of the same system.

The following diagram shows connection of pulsed outputs and digital inputs:

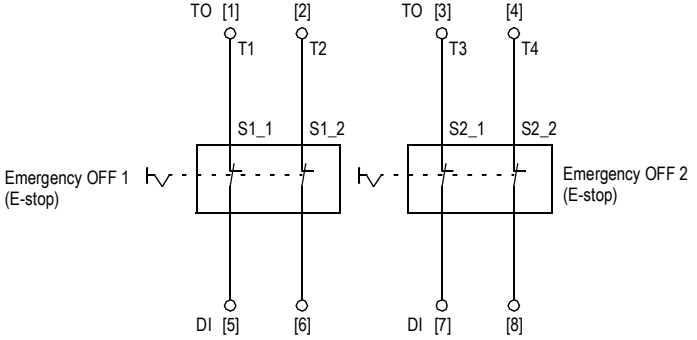

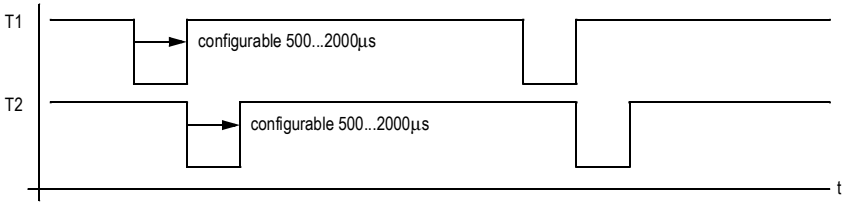

The above time graph shows the variation of two pulsed channels. When connected, the inputs of the system are expecting the specific pulse value. If the pulse is not received or an alternate pulse is received, the system will automatically set the output of the specific system to the "zero" state. If a line break, short circuit or an alternate signal is present, the FAU LED on the front of the I/O device will flash repeatedly until the problem is fixed. The system will then cyclically reconnect all the pulsed outputs.

⚠ WARNING

DEDICATED PULSED OUTPUTS

Pulsed outputs must not be used as safety-related outputs.

Failure to follow these instructions can result in death, serious injury, or equipment damage.

The following faults may occur:

- short circuit between two parallel lines
- change of two lines (e.g., TO [2] to DI [7])
- earth fault on one of the lines (only with earthed reference pole)
- line break
- opening of the contacts (i.e., one of the Emergency Stop switches is pressed)

If any of the faults occur, the

- FAU LED on the front panel of the remote input module is illuminated,
- outputs are set to 0, and
- fault code is generated.

Note: The XPSMF40 safety remote input module is designed for the de-energize to trip principle. If a fault occurs, the input and output signals revert to voltage- or current-free states to ensure safe operation.

Pulsed Outputs

The following table shows designations and functions of the eight pulsed outputs on connectors 4 and 8:

Designation / Terminal No.	Function (Outputs)	Connector
L-	return	connector 4
1	pulsed output 1	
2	pulsed output 2	
3	pulsed output 3	
4	pulsed output 4	
L-	return	
L-	return	connector 8
5	pulsed output 5	
6	pulsed output 6	
7	pulsed output 7	
8	pulsed output 8	
L-	return	

Safety-Related Digital Inputs

The XPSMF40 Safety PLC has 24 digital channels provided on connectors 1-3 and 5-7. Each digital channel can be configured as input or output via the XPSMFWIN programming environment. A status LED for each digital channel is provided on the front plate.

Note: The program only activates the LEDs that indicate the status of the digital inputs if the XPSMF40 is in RUN.

Short-circuit protected 24 V sources supply power to dry contacts via the S+ terminals. A voltage source provides power to a group of 4 sensors.

Signal sources with their own dedicated power supply can also be connected instead of contacts. The reference pole of the signal source must then be connected to the reference pole of the input (L-).

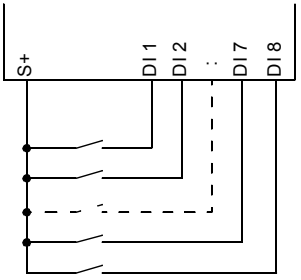

Connection of potential-free contacts

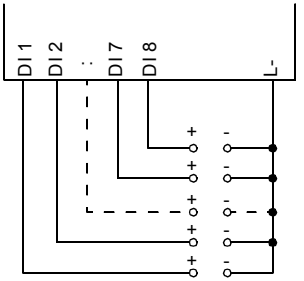

Connection of signal voltage sources

The safe state of the input is indicated by a 0-signal being passed to the logic of the user program. If the test routines detect a fault in the digital inputs, a 0-signal is processed in the user program for the defective channel according to the de-energize to trip principle. The FAU LED is then illuminated.

The de-energize to trip principle should be used with external wiring and when connecting sensors. To create a safe state in case of a fault, the input signals revert to the de-energized state (0-signal). The external line is not monitored, but a wire break is interpreted as a safe 0-signal.

The following table shows designations and functions of terminals 1-24 on connectors 1-3 and 5-7:

Designation / Terminal No.	Function (Outputs)	Connector Name
S+	sensor supply for inputs 1 to 4	Connector 1
1	digital input/output 1	
2	digital input/output 2	
3	digital input/output 3	
4	digital input/output 4	
L-	return	
S+	sensor supply for inputs 5 to 8	Connector 2
5	digital input/output 5	
6	digital input/output 6	
7	digital input/output 7	
8	digital input/output 8	
L-	return	
S+	sensor supply for inputs 9 to 12	Connector 3
9	digital input/output 9	
10	digital input/output 10	
11	digital input/output 11	
12	digital input/output 12	
L-	return	
S+	sensor supply for inputs 13 to 16	Connector 5
13	digital input/output 13	
14	digital input/output 14	
15	digital input/output 15	
16	digital input/output 16	
L-	return	
S+	sensor supply for inputs 17 to 20	Connector 6
17	digital input/output 17	
18	digital input/output 18	
19	digital input/output 19	
20	digital input/output 20	
L-	return	

Designation / Terminal No.	Function (Outputs)	Connector Name
S+	sensor supply for inputs 21 to 24	Connector 7
21	digital input/output 21	
22	digital input/output 22	
23	digital input/output 23	
24	digital input/output 24	
L-	return	

Safety-Related Digital Outputs

The XPSMF40 Safety PLC has 24 digital channels provided on connectors 1-3 and 5-7. Each digital channel can be configured as input or output via the XPSMFWIN programming environment. A status LED for each digital channel is provided on the front plate.

⚠ WARNING

UNINTENDED EQUIPMENT OPERATION

A failure of the Ethernet communications port results in all outputs being set to their initial values. Ensure that the system design does not cause a hazardous condition to exist with initial values.

Failure to follow these instructions can result in death, serious injury, or equipment damage.

An output is in a safe state when it is de-energized. If a fault occurs, all outputs are switched off. In the event of a fault due to Ethernet communication the relevant outputs are set to their initial values. How actuators respond in the event of a failure in communication must be taken into account.

Faults in one or more channels as well as a fault on the module are indicated by the FAU LED on the front plate. In addition, the system signals in the application program of the controller can be evaluated.

The following table shows the dependence between the ambient temperature and current of the outputs:

Ambient Temperature	Outputs
50 °C (122 °F)	Outputs 4, 8, 12, 16, 20 and 24 can each supply up to 2 A. Outputs 1...3, 5, 7...9, 11...13, 15, 17...19, 21...23 can each supply up to 0.5 A.
60 °C (140 °F)	Outputs 1...3, 5...7, 9...11, 13...15, 17...19 and 21...23 can each supply up to 0.5 A. Outputs 4, 8, 12, 16, 20 and 24 can each supply up to 1 A.

The external wiring of an output is not monitored, but a short-circuit will be detected.

For designations and functions of terminals 1-24 on connectors 1-3 and 5-7 see table in section *Safety-Related Digital Inputs, p. 29*.

The following diagram shows an example of connecting actuators to the outputs:

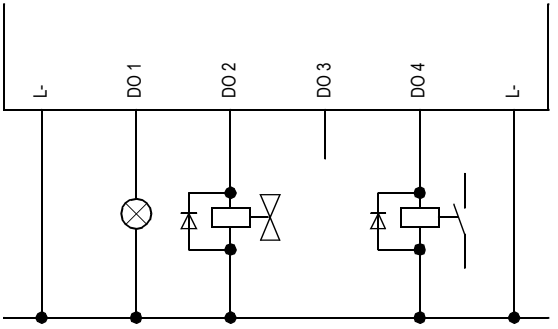

⚠ WARNING

RISK OF EQUIPMENT DAMAGE

When connecting a load use the appertaining reference pole L- of the concerned channel group (2-pole connection). Otherwise the internal protective circuits cannot work.

Failure to follow these instructions can result in death, serious injury, or equipment damage.

The above diagram shows an example of how to connect actuators to the outputs of the Safety PLC system. It is possible for inductive loads to be connected to the Safety PLC without using a protection diode on the load. However, to suppress any possible interference voltage, we strongly recommend using the protection diode, as shown in the example above.

Surge on Digital Inputs

In the case of digital inputs, an EN/IEC 61000-4-5 surge impulse can be read as a short-time high signal (result of the fast scan cycle time of the XPSMF40).

To avoid errors in these cases, 1 of the following measures must be taken in respect to the applications:

- installation of shielded input lines to prevent the effects of surges in the system
- noise blanking in the application program - a signal must be present for at least 2 cycles before it is evaluated

Note: Proper EMC design techniques will allow the designer of the safety system to achieve the maximum performance by using the minimum response time of the safety PLC.

Cable Disconnection

In a Safety PLC network, areas are covered using the Safety network. Therefore, damage or disconnection of the communications cable may occur. In the system below, the X represents a cable break between Safety PLC 2 and Safety PLC 3. The communications between each of the systems will cease.

The following table shows what happens, if communication ceases:

If...	Then ...
the Safety PLC 2 system was dependent on the inputs of the Safety PLC 3 system,	the corresponding outputs will automatically be set to zero.
the Safety PLC 3 system was dependent on the inputs of the Safety PLC 2 system,	the corresponding outputs will automatically be set to zero.
the systems are still provided with the 24 VDC power supply,	2 systems will continue to operate the remaining inputs and outputs of each separate system.

The following diagram shows an example of the Safety PLC network interruption:

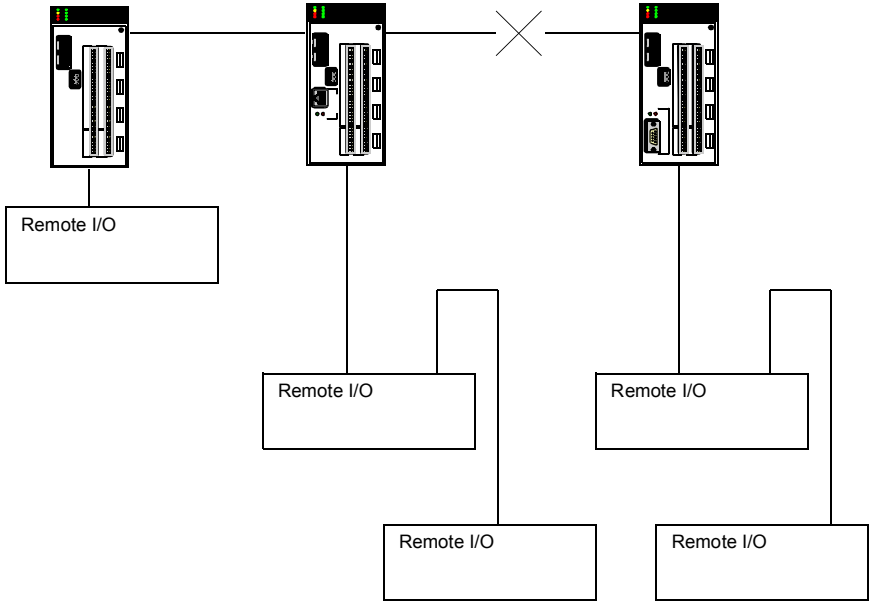

If the local network is reacting only on the inputs of the same system, the PLC system continues to run without failure.

Power Supply Interruption

The following table shows reactions to the changes in operating voltage:

Voltage Level	Reaction of the Safety PLC
19.3...28.8 VDC	normal operation
< 18.0 VDC	alarm state (internal variables are written and put to the inputs/ outputs)
< 12.0 VDC	Inputs and outputs are switched off.

If the power supply is interrupted, all inputs and outputs discontinue and return to the off state.

Small System Reconfiguration

A Safety PLC can be reconfigured while the network is executing an existing configuration. The resources that require reconfiguration must be stopped. The following table describes the reconfiguration procedure:

Step	Action
1	Using the XPSMFWIN programming environment, stop the Safety PLC's system which requires the new configuration.
2	Download the new configuration fully checked by a qualified safety engineer to the Safety PLC or remote I/O module via Ethernet cable Cat 5, grade D or better.
3	Once the module is re-programmed, start the device.
4	Execute the new configuration immediately.

Large System Reconfiguration

The following table describes the reconfiguration procedure for large systems:

Step	Action
1	Stop the relevant resources within the network using the XPSMFWIN programming environment. Small segments of a network can be reconfigured in stages.
2	Connect your PC to any Ethernet communications point.
3	Download the new configuration(s) fully checked by a qualified safety engineer to the Safety PLC network via Ethernet cable Cat 5, grade D or better.
4	Restart all devices, preferably in stages - system by system.

Hot Swapping

The remote I/O devices can be changed while a system (resource) is running. To exchange remote I/O devices during operation proceed as follows:

Step	Action
1	Ensure that the remote I/O module you want to replace is the same as in the current configuration.
2	Connect the remote I/O device directly to the PC running the XPSMFWIN programming environment.
3	Set the configuration parameters of the new remote I/O device exactly to the same values as the existing product.
4	Remove the existing device and replace it with the new remote I/O device. **Result:** The new remote I/O device will now run the existing configuration.

Short-Circuit Characteristics of the Output Channels

If...	Then ...
a short-circuit occurs in an output channel	the Safety PLC tests the affected channel in intervals of 5 s.
multiple short-circuits occur,	the channels are switched off individually in accordance with their power consumption.
the permitted maximum current for all outputs is exceeded	all outputs are shut down and cyclically reconnected.

⚠ WARNING

SHORT-CIRCUIT CONDITION

The output circuit terminals must not be connected with the connected load. In case of a short-circuit, the resulting high current may damage the terminals.

Failure to follow these instructions can result in death, serious injury, or equipment damage.

Diagnostics

Using the XPSMFWIN programming environment, all the Safety PLC's inputs and outputs can be viewed. Each Safety PLC provides diagnostic signals with reference to their status, error codes, and channel status.

In XPSMFWIN all diagnostic information can be viewed in 2 ways:

- Using the online test function - it can monitor the values of the signals and variables within the logic plan, while the systems are executing the program.
- Using the **Diagnostics** window that displays all states of the CPU, COM, and the Input/Output modules.

Operating Temperature and Power Supply Status Indication

The operating temperature and the status of the power supply are two very important bits of information because they warn of too high temperature and problems with the power supply which may seriously affect the entire system.

The operating temperature and power supply status data can be made available in 2 different ways:

1	On the online control panel (environment).
2	By attaching signals to each input from the CPU and sending these signals into a user program or/and by sending the signals to a standard PLC, HMI for viewing.

Replacing Faulty Modules (Cold Swapping)

If a Safety PLC or remote I/O fails, the following replacement procedure is used:

Step	Action
1	Disconnect the power supply to the specific module.
2	Disconnect all terminals (removing the input or output wires is not required).
3	Disconnect communication - Ethernet and any other field buses - from the Safety PLC or remote I/O.
4	Loosen the DIN rail clip and dismount the module.
5	Mount the new module and tighten the DIN rail clip.
6	Re-connect power supply.
7	Connect to the PC that is executing XPSMFWIN via Ethernet cable.
8	Enter new communication settings for MAC address and IP address.
9	Connect all I/O terminals to the new module. Rewiring is not necessary, but the terminals must be inspected to ensure they are in good operating condition.
10	Re-establish network connection.
11	Run the module. (Remote I/Os will automatically enter a runs state when their resource is in the run state.)

Testing I/Os for Interference Voltage and Earth Faults

Interference voltage can be measured with a universal tester. We recommend testing every single terminal for unapproved interference voltage.

When testing the external cables for insulation resistance, short-circuit, and line break, the cables must not be connected at both ends to prevent defects or destruction of the XPSMF40 caused by excessive voltages.

Earth faults are tested before connecting the field cable to the devices. The feed voltage must be disconnected from the sensors, as well as between the negative pole and the actuators. If the negative pole is earthed during operation, the earth connection must be disconnected while testing for earth faults. This also applies to the earth connection of an existing earth fault tester. Every terminal can only be tested against earth with a resistance tester or a similar test instrument.

Testing the insulation of 1 or more wires against earth is admissible, but not 2 muted wires. High voltage testing is also not admissible.

Guidelines to measure circuit voltage and insulation resistance can be found in EN/IEC 61131-2.

Maintenance

The XPSMF40 Safety PLC is designed for industrial applications. All the Safety PLC's components have a very high availability and are compliant with the requirements of EN/IEC 61508 for PFD and PFH in accordance with SIL 3.

Note: For safety-related use, the modules have to be subjected to an offline proof test in intervals of 10 years. For Offline Proof Test, see *Offline Proof-Test, p. 39*.

⚠ WARNING

OFFLINE PROOF TEST

Offline Proof Test according to IEC 61508-4 must be conducted to verify proper operation.

Failure to follow these instructions can result in death, serious injury, or equipment damage.

Repair of PLC Devices

You may not repair the XPSMF40 Safety PLC. Defective devices must be returned to Schneider Electric for repair.

The validity of the safety certificate will expire if unauthorized repairs have been made on the device. The manufacturer will bear no responsibility for unauthorized repairs. Unauthorized repairs will also cancel all warranties for the device.

Offline Proof-Test

Overview

The offline proof-test recognizes dangerous concealed faults that would affect the safe function of the plant.

Safety systems have to be subjected to an offline proof test in intervals of 10 years. By an analysis using the calculation tool SILence, the interval often may be extended. (SILence is a separate program. Contact the service for more information or take a look at the HIMA homepage for a test version of the software SILence.)

For relay modules, the proof test for the relays has to be carried out in intervals defined for the respective plant.

Execution of the Offline Proof Test

The execution of the offline proof test depends on the configuration of the plant (EUC = equipment under control), which risk potential it has, and which standards for operation are applied and form the bases for the approval by the test authority in charge.

According to the standards IEC 61508 1-7, IEC 61511 1-3, IEC 62061, and VDI/VDE 2180 sheet 1 to 4, in case of safety-related systems the operating company has to arrange for proof tests.

Periodic Proof Testing

The modules can be proof tested by executing the full safety loop.

In practice the input and output field devices have a more frequent proof test interval (e.g., every 6 or 12 months) than the modules. If the end-user tests the complete safety loop because of the field devices then the modules are automatically included in these tests. No additional periodic tests are required for the modules.

If the proof test of the field devices does not include the modules then the PES needs to be tested as a minimum once in 10 year. This can be done by executing a reset of the modules.

In case there are periodic proof test requirements for specific modules then the end-user should refer to the data sheets of these modules.

Equipment Description

3

At a Glance

Overview

This chapter contains the equipment description of XPSMF40 Safety PLC.

What's in this Chapter?

This chapter contains the following topics:

Topic	Page
Housing Elements	42
Reset Button	45
LEDs	46
Operating Conditions	50
Technical Characteristics	53
Additional Items	58

Housing Elements

Overview

The following sections include images of the different versions of the XPSMF40 showing the various elements provided on the front plate.

Front View XPSMF4000 / 4002

The following image shows the various elements of the XPSMF4000 and XPSMF4002 front plate:

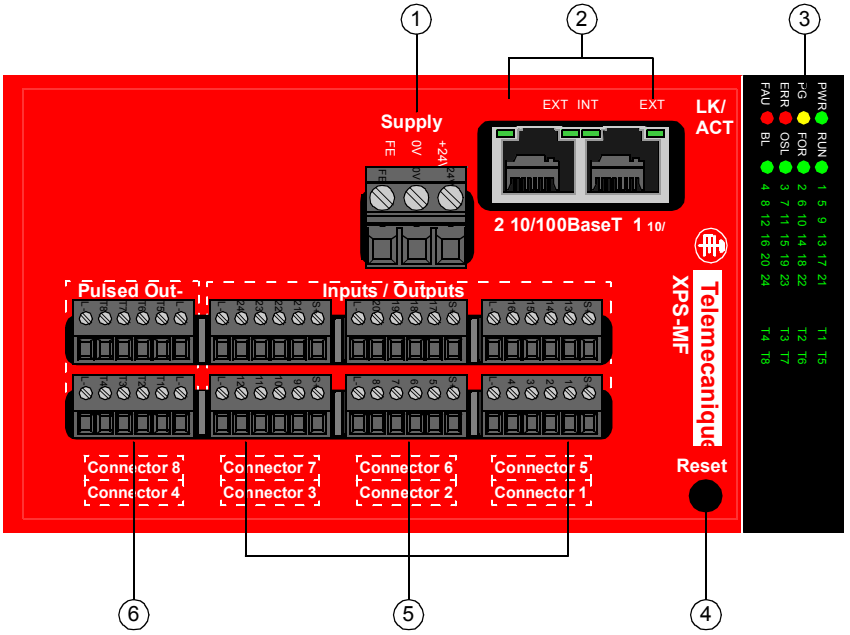

Elements of the front plate

No.	Description
1	24 V DC power supply input ● 24 V is the + pole (24 VDC) ● 0 V is the – pole (GND) ● PE is the functional earth
2	Ethernet 10/100BaseT RJ-45 connectors
3	status LEDs
4	reset button
5	digital inputs / outputs
6	pulsed outputs (only use with line control)

Front View XPSMF4020 / 4022

The following image shows the various elements of the XPSMF4020 and XPSMF4022 front plate:

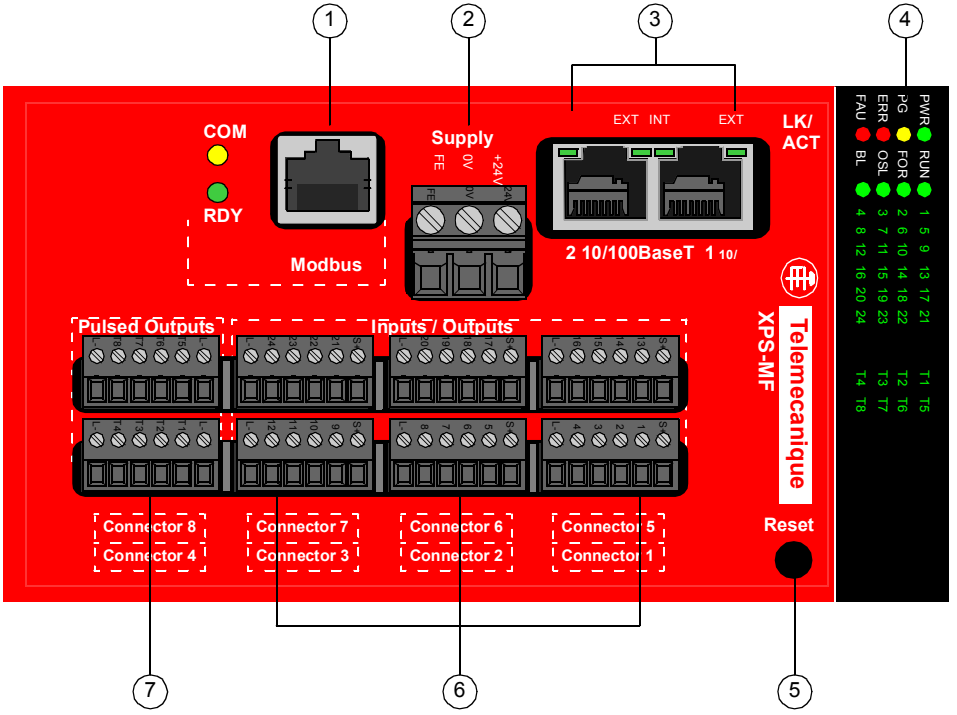

Elements of the front plate

No.	Description
1	Modbus SL RJ-45 connector
2	24 V DC power supply input ● 24 V is the + pole (24 VDC) ● 0 V is the – pole (GND) ● PE is the functional earth
3	Ethernet 10/100BaseT RJ-45 connectors
4	status LEDs
5	reset button
6	digital inputs / outputs
7	pulsed outputs (only use with line control)

Front View XPSMF4040 / 4042

The following image shows the various elements of the XPSMF4040 and XPSMF4042 front plate:

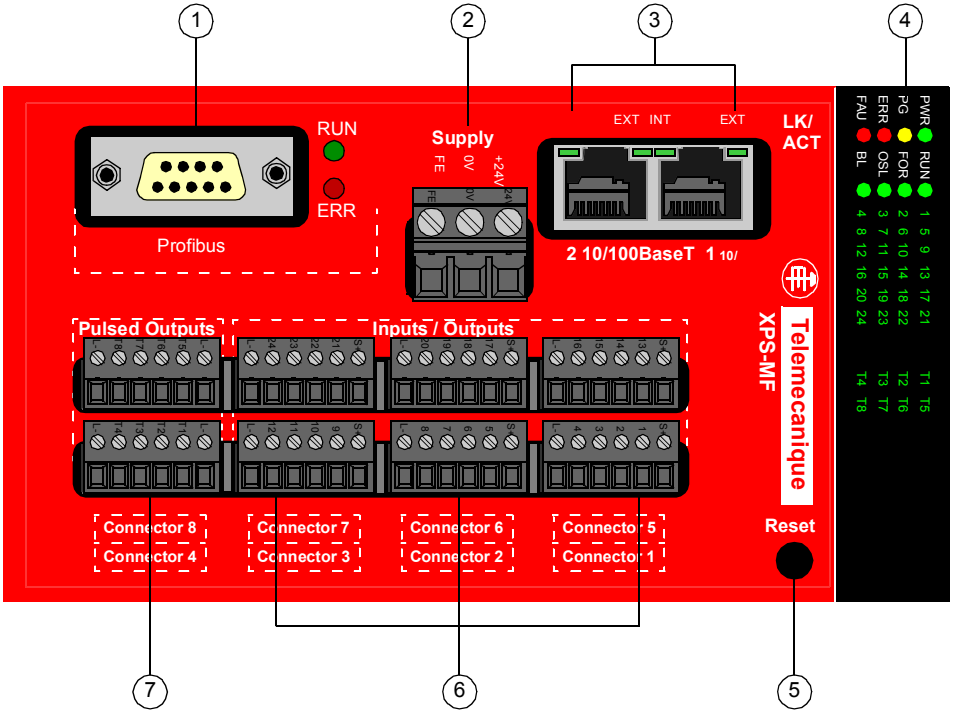

Elements of the front plate

No.	Description
1	Profibus DP SUB-D9 connector
2	24 VDC power supply input ● 24 V is the + pole (24 VDC) ● 0 V is the – pole (GND) ● PE is the functional earth
3	Ethernet 10/100BaseT RJ-45 connectors
4	status LEDs
5	reset button
6	digital inputs / outputs
7	pulsed outputs (only use with line control)

Reset Button

Overview

The device is equipped with a reset button. Use the reset button, for example, when you have lost the PC connection password.

Using Reset Button

You can access the reset button through the small round opening in the front plate of the housing.

Push the button only while you reboot the device and keep the button pressed for at least 20 s. Pushing the reset button while the device is running produces no result.

Effect

When you push the reset button,

- all accounts are deactivated (except the default `Administrator` account without password) and
- IP addresses and system ID (SRS) are set to default values.

Note: After the reset button has been activated, values are modified and remain valid until the next reboot. After the next reboot, the previous values are restored. You can enter new information, if necessary.

⚠ WARNING

UNINTENDED EQUIPMENT OPERATION

While operating the reset button, the field bus cables should be disconnected from the field bus terminals to avoid malfunctions.

Failure to follow these instructions can result in death, serious injury, or equipment damage.

LEDs

General LEDs and Input / Output LEDs

The LEDs indicating general functions and the state of the input and output channels as well as the state of the pulsed outputs are provided on the upper part of the XPSMF40's housing.





The following table describes the general functions, the inputs / outputs as well as the pulsed output LEDs on the upper part of the XPSMF40's housing:

LED	Color	Status	Meaning
1-24 (Digital Inputs / Outputs)	green	on	For channels configured as inputs: An input signal is being received. For channels configured as outputs: An output signal is being sent.
T1-T8	green	on	The pulsed outputs are active.
PWR	green	on	24 VDC operating voltage present
	not illuminated	off	no operating voltage
RUN	green	on	Normal state of PES (RUN); A loader user program is executed (not in remote I/O modules). The CPU reads inputs, processes the logic, and writes outputs; Communication and hardware/ software tests are carried out.
	green	flash	The CPU is in STOP and is not executing any user program. All outputs are reset to a safe de-energized state. STOP can be triggered by setting the Emergency stop system variable to TRUE in the user program or by a direct command from the PC. Seen when PLC is switched on for approximately 10 s during the system check.
	not illuminated	off	The CPU is in ERROR STOP (see ERR below).

LED	Color	Status	Meaning
ERR	red	on	The CPU has discovered a hardware fault in the CPU and is switching to ERROR STOP. The CPU has discovered a software error in the operating system. The watchdog has triggered ERROR STOP, because the cycle time has been exceeded. The CPU has stopped the execution of the user program, ended all hardware and software tests, and all outputs have been reset. The CPU can only be started again through a command from the PC.
	not illuminated	off	No error has been detected.
PG	yellow	on	The CPU is being loaded with a new configuration.
	yellow	flash	The Flash ROM is being loaded with a new operating system.
	not illuminated	off	No configuration or operating system is being loaded.
FOR	green	on	The CPU is in RUN mode and FORCE is active.
	green	flash	The PES is in STOP, but FORCE is prepared and is activated, in case the PES is started.
	not illuminated	off	FORCE is not activated.
FAU	red	on	Error display for Line Control. The user program has caused an error. The PES configuration is faulty. The new operating system was not correctly loaded and the operating system is corrupt.
	red	flash	An error has occurred during the write cycle for a Flash ROM (during the operating system update). One or more I/O errors have occurred.
	not illuminated	off	None of the above errors has occurred.
OSL	green	flash	Emergency loader of the operating system is active.
BL	green	flash	COM in `INIT_FAIL` state.

Ethernet LEDs

The Ethernet LEDs are provided on all XPSMF40 versions on the upper side of the 10/100BaseT RJ-45 sockets. They indicate internal and external communication activities for each RJ-45 socket.

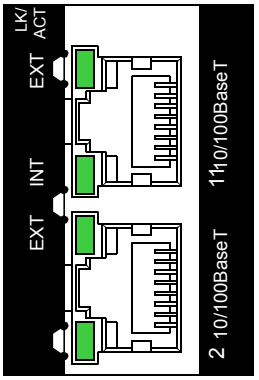

The following table describes the Ethernet LEDs LK/ACT (LINK / ACTIVE) on the upper sides of the10/100BaseT RJ-45 sockets:

LED	Color	Status	Meaning
external LK/ACT	green	off	No connection / no link is established.
		on	A connection / a link is established.
		flashes to off	External data transmission activity at 10 or 100 Mbit/s has been detected.
internal LK/ACT	green	off	No connection / no link is established.
		on	A connection / a link is established.
		flashes to off	Internal data transmission activity at 10 or 100 Mbit/s has been detected.

Profibus DP LEDs

The Profibus DP LEDs are only provided on the XPSMF4040 and XPSMF4042 for Profibus DP connection. They indicate the status of the Profibus DP device.

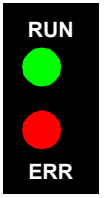

The following table describes the Profibus DP LEDs RUN and ERR situated on the right-hand side of the SUB-D9 Profibus socket:

LED	Color	Status	Meaning
RUN	green	off	The device is not switched on or not operational.
		on	The device is in operational state.
ERR	red	off	Power is not available or the slave is exchanging data.
		on	A connection to another device is not established and no data interchange is possible. The bus may be disconnected or the master may not be available.
		flashing	An error occurred in configuration and therefore no data interchange is possible.

Modbus SL LEDs

The Modbus SL LEDs are only provided on the XPSMF4020 and XPSMF4022 for Modbus SL connections. They indicate the status of the Modbus SL device.

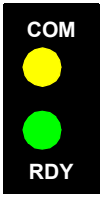

The following table describes the Modbus SL LEDs COM and RDY situated next to the RJ-45 Modbus socket:

LED	Color	Status	Meaning
COM	yellow	off	No frames are received or transmitted.
		on	Frames are transmitted or received on the bus.
RDY	green	off	Power is not available.
		on	The device is in operational state.

Operating Conditions

Overview

The XPSMF40 Safety PLC has been developed in compliance with the requirements of the following standards for EMC, climate and environment:

EN/IEC 61131-2	programmable controllers, part 2, equipment requirements and tests
EN/IEC 61000-6-2	EMC generic standard immunity industrial
EN/IEC 61000-6-4	EMC generic standard emission industrial

To use the XPSMF40 Safety PLC, the following conditions must be fulfilled:

Protection Class	protection class II according to EN/IEC 61131-2
Pollution	pollution degree II
Altitude	< 2000 m (6561 ft) in operation; < 3000 m (9842 t) transport and storage
Enclosure	standard: IP 20 If requested by the relevant application standards (e.g., EN 60204, EN 954-1), the device must be installed in a required enclosure (e.g., IP 54).

Climatic Conditions

The most important tests and limit values for climatic conditions are listed in the following table:

EN/IEC 61131-2	**Climatic Tests**
4.1.1	operating temperature: 0 to 60 °C (32 to 140 °F) test limits -10...+70 °C (14...158 °F)
4.3.1	storage temperature: -40...85 °C (-40...185 °F), with battery only -40 °C (-40 °F)
6.1.1	dry heat and cold withstand test: 70 / -40 °C (158 / -40 °F), 16 h, EUT power supply disconnected
6.1.2	change of temperature, withstand and immunity test: -40 / 70 °C (-40 / 158 °F) and 0 / 55 °C (32 / 131 °F), EUT power supply disconnected
6.1.3	cyclic damp heat withstand test: 25 / 55 °C (77 / 131 °F), 95% relative humidity, EUT power supply disconnected

Mechanical Conditions

The most important test and limit values for mechanical conditions are listed in the following table:

EN/IEC 61131-2	Mechanical Tests
6.2.1	vibration test, operating: 5...9 Hz / 3.5 mm (0.14 in), 9...150 Hz / 1 g)
6.2.2	immunity shock test: 15 g (0.53 oz), 11 ms, EUT operating, 2 cycles per axis

EMC Conditions

The most important tests and limit values for EMC conditions are listed in the following tables:

EN/IEC 61131-2 Chapter 8.3.3 + 9	Noise Immunity Tests
8.3.3 + 9.5 EN/IEC 61000-4-2	ESD test: 4 kV contact / 8 kV air discharge
8.3.3 + 9.6 EN/IEC 61000-4-3	RFI test (10 V/m): 80 MHz...2 GHz, 80% AM
8.3.3 + 9.8 EN/IEC 61000-4-4	burst test: 2 kV power supply / 1 kV signal lines
8.3.3 + 9.9 EN/IEC 61000-4-5	surge: 1 kV, 0.5 kV
8.3.3 + 9.10 EN/IEC 61000-4-6	radio frequency interference: 10 V 150 Hz...80 MHz, AM

EN/IEC 61131-2	Emission Tests
8.2.3 + 9.3 EN 50011 8.2.3 + 9.4 EN 50011	radiated ● 30...230 MHz 40 dB(µV) ● 230...1000 MHz 47 dB(µV) conducted ● 0.15...0.5 MHz 79 dB(µV) ● 0.5...30 MHz 73 dB(µV)

Voltage Supply

The most important tests and limit values for the voltage supply of the equipment are listed in the following table:

EN/IEC 61131-2 Chapter 6.3.7	Verification of DC Power Supply Characteristics
-	The power supply must alternatively meet the following standards: EN/IEC 61131-2 or SELV (Safety Extra Low Voltage, EN60950) or PELV (Protective Extra Low Voltage, EN60742)
-	Fusing the XPSMF40 Safety PLC must be performed according to this manual or the power supply data sheet.
6.3.1.1, 6.3.1.3, 6.3.1.4, 6.3.2.1, 6.3.2.2, 6.3.3.1, 6.3.3.2	voltage range test: 24 VDC, -20...25% (19.2...30.0 VDC)
8.3.4 + 9.12	momentary interruption immunity test: DC, PS 2: 10 ms
6.3.3.1	reversal of DC power supply polarity test

Technical Characteristics

Mechanical Data

Power Supply Connectors, Screw Connectors

Connection Diameters, Single Lead Connection	
Without Lead End Sleeves	solid 0.2...2.5 mm^2 stranded 0.2...2.5 mm^2 AWG 24-12
Stranded with Lead and Sleeves (without Plastic Sleeves)	0.25...2.5 mm^2 AWG 23-12
Stranded with Lead End Sleeves (with Plastic Sleeves)	0.25...2.5 mm^2 AWG 23-12

Stripping Length and Torque

Stripping length	10 mm (0.39 in)
Torque	0.5 Nm (4.43 lb-in)

Power Supply Connectors, Cage Clamp

Connection Diameters, Multiple Lead Connections (2 Leads Max., Same Diameters)	
Without Lead End Sleeves	solid 0.2...2.5 mm^2 stranded 0.2...2.5 mm^2 AWG 24-12
Stranded with Lead and Sleeves (without Plastic Sleeves)	0.25...2.5 mm^2 AWG 23-12
Stranded with Lead End Sleeves (with Plastic Sleeves)	0.25...2.5 mm^2 AWG 23-12

Signal Line Connectors, Screw Connectors

Connection Diameters, Single Lead Connection	
Without Lead End Sleeves	solid 0.14...1.5 mm^2 stranded 0.14...1.5 mm^2 AWG 25-15
Stranded with Lead End Sleeves (without Plastic Sleeves)	0.25...1.5 mm^2 AWG 23-15
Stranded with Lead End Sleeves (with Plastic Sleeves)	0.25...0.5 mm^2 AWG 23-20

Torque

Torque	0.22 Nm (1.9 lb-in)

Signal Line Connectors, Cage Clamp

Connection Diameters, Multiple Lead Connections (2 Leads Max, Same Diameters)	
Without Lead End Sleeves	solid 0.14...1.5 mm^2 AWG 26-16 stranded 0.14...1.5 mm^2
Stranded with Lead and Sleeves (without Plastic Sleeves)	0.25...0.34 mm^2 AWG 22
Stranded with Lead End Sleeves (with Plastic Sleeves)	0.5 mm^2 AWG 20

Stripping Length and Torque

Stripping length	9 mm (0.35 in)
Torque	0.22...0.25 Nm (1.9 to 2.2 lb-in)

Technical Data

The XPSMF40 Safety PLC technical data are presented in the following tables:

User Memory	max 250 kB user program max 250 kB user data
Interface Safe Ethernet	2*RJ-45, 10/100 Base T (at 100 Mbit/s) with integrated switch
Modbus Serial Line Slave	RJ-45 (Modbus)
Profibus DP Slave	SUB-D 9-pin female (Profibus)
Operating Voltage	24 VDC -15%/+20%, rpp <=5%, from a power supply with protective separation, conforming to EN/IEC 61131-2 requirements
Current Consumption	max 8 A (with maximum load) idle current: 0.5 A
Operation Temperature	0...60 °C (32 to 140 °F)
Temperature Class	T4
Storage Temperature	-40...+85 °C (-40...185 °F)
Fuse (external)	10 A (slow blow)
Battery Backup	none
Protection	IP 20
Max Dimensions	height: 151.5 mm (5.96 in) width: 74 mm (2.91 in) depth: 153 mm (6.02 in) with XPSMCTS 151.5 mm (5.96 in) with XPSMCTC
Weight	approx. 1,000 g (35.27 oz)

Digital inputs

Number of Inputs	24 (not electrically isolated)
1-signal: Voltage Current Consumption	15 to 30 VDC > 2 mA @ 15 VDC (default value 13 V + 2 V safety range can be configured up to 30 VDC) approx. 3.5 mA @ 24 VDC approx. 4.5 mA @ 30 VDC
0-signal: Voltage Current Consumption	max 5 VDC (default value 7 V - 2 V safety range is freely parameterizable up to max. 1-signal -4 V and min. 2 V) max 1.5 mA (1 mA @ 5 VDC)
Input Resistance	< 7 kΩ
Overvoltage Protection	-10 V, +35 V
Max. Line Length	300 m (11,811 in)
Supply	2 x 20 VDC / 100 mA, short circuit proof
Metrological Accuracy Channel Error Zero Point Calibration End-Point Channel Error Temperature Error Zero Point Temperature Error End-Point Linearity Error	 +/-1 % +/-4 % +/-0.5 % +/-1 % / 10 K +/-1 % / 10 K +/-0.5 % of zero point

Digital Outputs

Number of Outputs	24 (not electrically isolated)
Output Voltage	>=L+ minus 2 VDC
Output Current	channels 1...3, 5...7, 9...11, 13...15, 17...19 and 21...23: 0.5 A @ 60 °C (140 °F) channels 4, 8, 12, 16, 20 and 24: 1 A @ 60 °C (140 °F) channels 8, 12, 20 and 24: 2 A @ 50 °C (122 °F)
Minimum Load	2 mA per channel
Internal Voltage Drop	max 2 VDC @ 2 A
Leakage Current (with 0-signal)	max 1 mA @ 2 VDC
Response to Overload	shutting down relevant outputs with cyclical reconnecting
Total Output Current	max 7 A (when exceeded, shutdown of all outputs and cyclic reconnection occurs)
Exceeding the Total Current (I_Total>4A)	all slot outputs are shut down until the overload is removed (cyclic test)
Admissible Total Current per Slot	3.5 A

Pulsed Outputs

Number of Outputs	4 (not electrically isolated)
Output Voltage	approx. 20 V (depending on supply voltage)
Output Current	approx. 60 mA
Minimum Load	none
Response to Overload	4 x >= 19.2 V, short-circuit current 60 mA @ 24 V

Supply Voltage

The XPSMF40 Safety PLC is a single voltage system.

The required operating voltage is defined as follows in accordance with EN/IEC 61131-2.

Supply Voltage	
Nominal Value	24 VDC, -15...+20%
Max. Permissible Function Limits in Continuous Operation	18.5 to 30.2 VDC (including ripple)
Max. Peak Value	35 VDC for 0.1s
Permissible Ripple	w < 5%
Reference Potential	L - (negative pole) Earthing the reference potential is permitted.

Additional Items

Overview This section lists additional items that can be used with or alongside the Safety PLC.

List of Additional Items

Additional Equipment	Description
Power Supply Unit	24 VDC with protective separation from power supply ● EN/IEC 61131-2 ● product ranges: ABL7RE, ABL8 ● location: *www.telemecanique.com*
DIN Rail	A suitable DIN Rail for mounting the safety PLC. AM1•• range of DIN rail is acceptable and can be found under the Cable and Wiring Accessories in Control and Connection Components Catalog.
XPSMF60••	The XPSMF60 safety PLC is a modular PES in a rack system housing. The PLC is able to house up to 6 of the following modules (see the table below). The number of times a particular module is used in the XPSMF60 is not restricted.
XPSMF3DIO••	remote input and output modules The number of inputs and outputs may vary depending on the model.
XPSMF2DO••	remote output module The number of outputs varies.
XPSMF1DI1601	remote input module with 16 digital outputs
Safety Modules	various safety modules and safety PLCs (see *Machine Safety in the Essential Guide*) Module functions range from emergency stop to light curtain monitoring.
Standard PLCs	non-safety data transfer (see *Automation, Automation and Control, Essential Guide, 2005*) Standard PLCs operate both large and small machinery. Ranges: ● Twido ● Micro ● Modicon M340 ● Premium ● Quantum
Safety Switches	● coded magnetic switches ● limit switches ● rotary lever or spindle ● emergency stops ● foot switches ● switch disconnectors (See *Safety Section or the Essential Guide* for more details.)

Additional Equipment	Description
Safety Devices and Actuators	• mat • light curtains • 2-hand control units • motor starters (See *Safety Section or the Essential Guide* for more details.)
Human Machine Interface Devices	Increase safety awareness: • push buttons and pilot lamps • beacons • sirens • Magelis displays (See *Operator Dialog Section of the Essential Guide* for more details.)

Note: All the catalogs and guides are available at *http://www.telemecanique.com*.

Safety-Related Communication

4

At a Glance

Overview

The XPSMF40 provides safe communication via SafeEthernet protocol over Ethernet as well as non-safe communication via Modbus SL, Modbus TCP/IP and Profibus DP. This chapter describes the safe communication.

What's in this Chapter?

This chapter contains the following sections:

Section	Topic	Page
4.1	Safety-Related Communication	63

4.1 Safety-Related Communication

At a Glance

Overview

This section provides information about safety-related communication via SafeEthernet with the XPSMF40.

What's in this Section?

This section contains the following topics:

Topic	Page
SafeEthernet	64
Function	66
OSI Model	68
Technical Characteristics	70
Networking Example	72

SafeEthernet

Overview

The Safety PLCs communicate with each other and the PC via Ethernet using the SafeEthernet protocol. This section therefore provides general information about the SafeEthernet protocol and the OSI model.

Definition of SafeEthernet

Based on the Ethernet technology, SafeEthernet provides a transfer protocol for transmitting safety-related data up to RC 6 or SIL 3. SafeEthernet implements a mechanism that can detect and react to the following:

- corruption of transmitted data
- incorrect address allocation for the messages (transmitter, receiver)
- incorrect data sequence (repetition, loss, change)
- incorrect timing (delay, echo)

SafeEthernet is based on the standard Ethernet or Fast Ethernet according to IEEE 802.3.

Transmitting Safety-Related Data Over Standard Ethernet Networks

The transmission of the safety-related data does not change the protocol frame of the standard Ethernet.

According to the Black Channel Approach in SafeEthernet, insecure transmission channels (Ethernet) are used and controlled by safety-related protocol mechanism at transmitter and receiver. This way, regular Ethernet network components, such as hubs, switches, routers, and PCs supplied with network interfaces can be used within a safety-related network. The significant difference to standard Ethernet is determinism, the real-time ability of SafeEthernet.

A special protocol mechanism ensures deterministic behavior even in case faults occur or new communication participants emerge. New components are automatically integrated into the running system. All components of the network could be changed while the system is running. With the use of switches, transmission times can be clearly defined. This way, Ethernet works in real time. Possible transfer speed up to 100 Mbit/s for safety-related data is higher than the speed normally used. Copper lines as well as fiber optic cables can be used as transmission media. The integration of firm intranets as well as connections to the Internet, can be realized with SafeEthernet technology. The terms for safety-related communication have to be considered.

Therefore, only 1 network for safety and non-safety data transfer is necessary. SafeEthernet can be fitted to existing Ethernet networks with adjustable network profiles. With SafeEthernet, you can set up flexible built-up system structures for decentralized automation with defined reaction times. According to the requirements, the intelligence can be centralized or distributed to the participants in a decentral way within the network. There is no limit to the number of safe participants of the network and the amount of transferred safe data to get the needed reaction times. A central controller and the built-up of parallel structures is therefore superfluous.

The transmission of standard and safe data can be integrated into 1 network. A separate safety bus can be saved. The Safety PLC’s switches perform the tasks normally carried out by network switches.

Function

Switch for Ethernet Communication

The switch integrated into each system for Ethernet communication is shown on the block diagram (see *Block Diagram XPSMF4000 / 4002, p. 24*).

In contrast to a hub, a switch can store data packets for a short period of time in order to establish a temporary connection between 2 communication partners (transmitter/receiver) for transferring data. Thus, collisions, which typically occur in hubs, can be avoided, and the load on the network can be reduced. For controlled data transfer, every switch needs an address/port relation table. This table will be automatically generated in a self-learning process. Each port in the switch is correlated to the defined MAC addresses. According to this table, incoming data packets are switched directly to the corresponding port.

The switch automatically switches between the transfer rates of 10 and 100 Mbit/s full and half duplex transmissions.

The switch controls communication between different devices. The switch can address up to 1000 absolute MAC addresses.

Autocrossing recognizes if cables with crossed wires have been connected, and the switch adjusts accordingly.

Operation Parameters of the Ethernet Interfaces

Up to COM OS version 8.32 all Ethernet ports of the integrated Ethernet switches have the same settings:

- Autoneg/Autoneg for Speed Mode
- Flow-control Mode

Other settings are not possible and will be rejected by the PLC when loading a configuration.

The Ethernet interfaces 10/100 BaseT of the device have the following parameters:

Firm Operating Parameters	
Speed Mode	Autoneg
Flow-Control Mode	Autoneg

Other devices combined with the Safety PLC or remote I/O device must have the following network settings:

Admissible Settings of Other Devices	
Speed Mode	Autoneg
Flow-Control Mode	Autoneg
or	
Speed Mode	Autoneg
Flow-Control Mode	Half Duplex
or	
Speed Mode	10 or 100 Mbit/s
Flow-Control Mode	Half Duplex

Non-Admissible Settings of Other Devices	
Speed Mode	Autoneg or 10 or 100 Mbit/s
Flow-Control Mode	Full Duplex

For COM OS version > 8.32 and XPSMFWIN Hardware Management version > 7.56.10 each Ethernet port of the integrated switch can be individually configured.

Connections for SafeEthernet/ Networking Examples

For the networking via SafeEthernet protocol, the devices are equipped - depending on the design - with 2 connections on the front panel of the case. See example of an *Ethernet Cable Connection Diagram, p. 74*.

The various systems can be networked together as required via Ethernet (star or line configuration). A programming unit (PC) can also be connected wherever required.

Note: Ensure that no network loops are formed when connecting systems together. The system must receive data packets along 1 path only.

OSI Model

Overview

The model divides the functions of a protocol into a series of layers known as a protocol stack (e.g., TCP/IP stack). Lower layers are implemented in hardware, while higher layers are used in software. Each of the layers is a transport platform for the next higher level and relies on the next lower level.

Scheme

The following image is a graphic representation of the OSI layers:

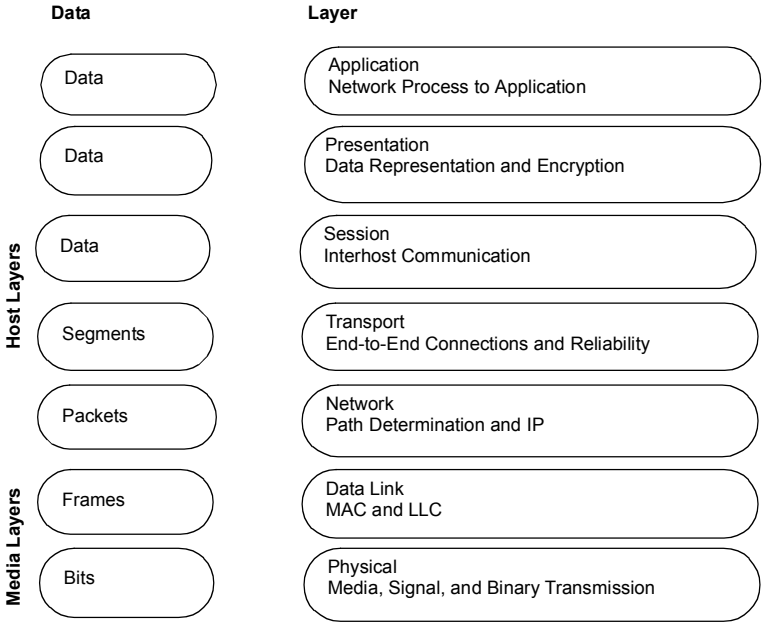

7 OSI Layers

The following table describes the 7 OSI layers (bottom-top):

Number	Layer	Data	Description
Media Layers			
1	physical layer media, signal, and binary transmission	bits	Defines all electrical and physical specifications for the devices.
2	data link layer MAC and LLC	frames	Provides the functional and procedural means to transfer data between network entities and detect and correct errors that may occur in the Physical layer.
3	network layer path determination and IP	packets	Provides the functional and procedural means of transferring variable length data sequences from a source to a destination via one or more networks.
Host Layers			
4	transport layer end-to-end connections and reliability	segments	Provides transparent transfer of data between end users.
5	session layer interhost communication	data	Provides the mechanism for managing the dialog between end-user application processes.
6	presentation layer data representation and encryption	data	Relieves the Application layer of concern regarding syntactical differences in data representation within the end-user systems.
7	application layer network process to application	data	Interfaces directly to and performs common application services for the application processes.

Technical Characteristics

Ethernet Wiring

Industrial standard cables can be subjected to extreme mechanical stresses. The minimum SafeEthernet protocol communication requires Category 5 twisted pair cables with a class D rating. To transmit data across greater distances and to minimize error probability, fiber optic cables should be used.

The safety PLCs communicate at 100 Mbit/s (Fast Ethernet) and 10 Mbit/s (full duplex mode). The XPSMF40 Safety PLC has an auto cross-over function built into the switch, which allows the use of both a 1:1 cable and a cross-over cable.

The outer shielding of the twisted pair cable must be earthed at both ends. RJ-45 connectors automatically connect the shield of the cable to the housing of the safety PLC.

Interface Elements

When connecting a PLC over Ethernet communication, the following interface elements are recommended: FL CAT5 TERMINAL BOX of Phoenix Contact (R). The PLCs are mounted on an earthed EN mounting rail. The conductors of the field cable are attached to the interface terminals. It is important to make sure that the cable shield is also connected via the strain relief.

Prefabricated patch cables are used to connect the interface element and the XPSMF40 PLC. If the rail is earthed in accordance with the standards, it is enough to mount an interface element on a rail.

Specified Cables

Depending on their transmission and high-frequency properties, the cables are specified by category as follows:

Category	Specification	Approved
1	-	no
2	up to 1 MHz	no
3	up to 16 MHz	no
4	up to 20 MHz	no
5	up to 100 MHz	yes
6	up to 250 MHz	yes
7	up to 600 MHz	yes

The channel as a point-to-point transmission path is defined as follows:

Class	Specification	Approved
A	up to 0.1 MHz	no
B	up to 1 MHz	no
C	up to 16 MHz	no
D	up to 100 MHz	yes
E	up to 250 MHz	yes
F	up to 600 MHz	yes

The higher the letter, the greater the demand on the transmission channel. For Ethernet communication at 100 MHz, Category 5 (or higher) cables and at least Class D capacity are required.

RJ-45 Connector

For direct Ethernet plug connections without interface elements, you can use connectors such as IP 20 Data Plug (Harting(R)). You can assemble the cable quickly by crimping the conductors; special tools are not required.

Switches

To span distances of more than 100 m (328 ft) using SafeEthernet protocol, rail switches of the RS2 series (Hirschmann(R)) with optical fibre ports are recommended.

Networking Example

Overview

For networking via Ethernet, the XPSMF40 Safety PLC provides 2 connectors on the front panel. Various systems can be networked as required via Ethernet star or line configuration. A PC can also be connected wherever required.

Note: When building the network, ensure that no network loops occur. The system must receive data along 1 path only.

SafeEthernet Networking Example

The following scheme shows a SafeEthernet networking example:

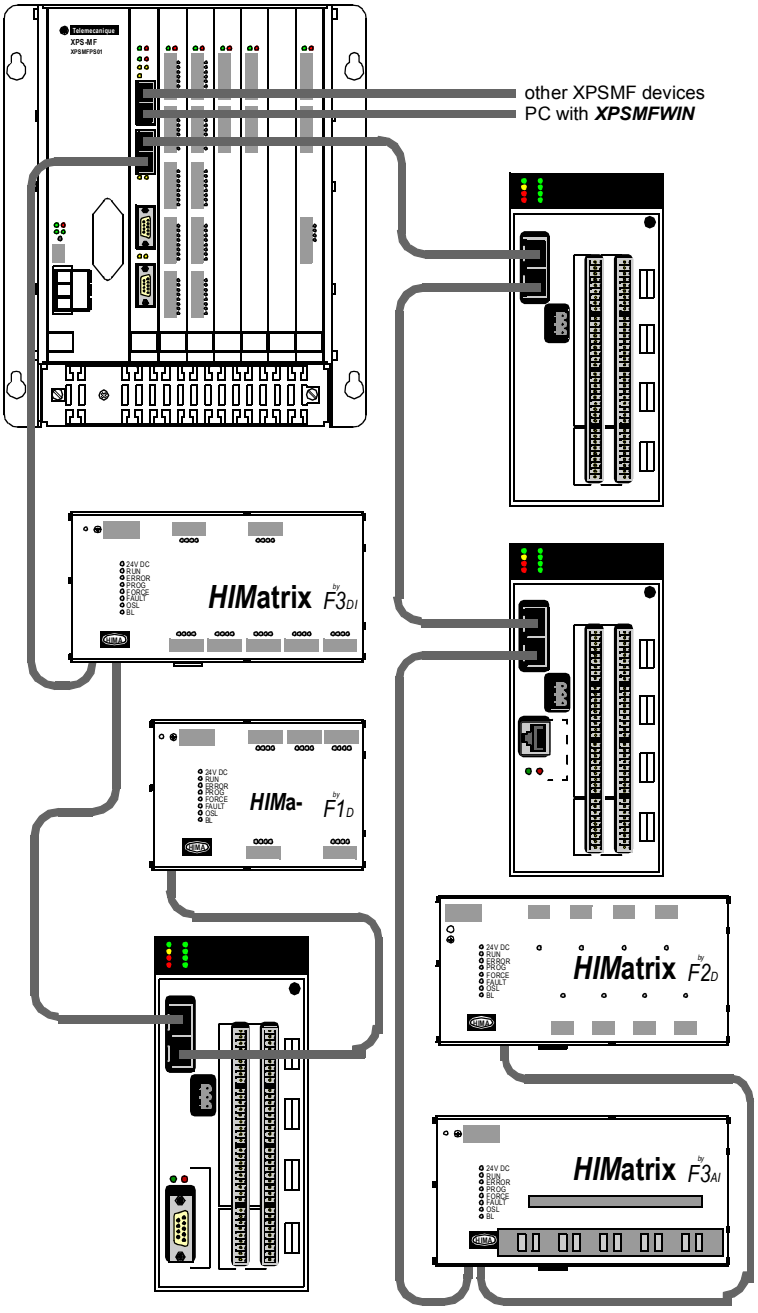

Ethernet Cable Connection Diagram

The following is an Ethernet cable connection diagram:

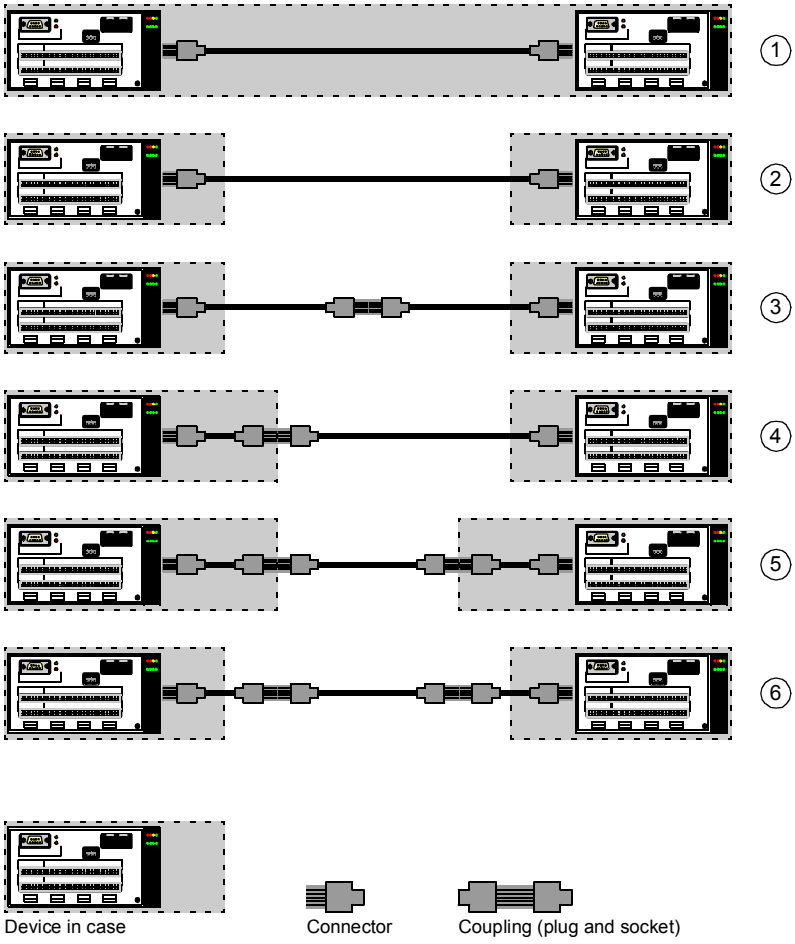

Connector pairs and cable distances

Number	Number of Plug Connector Pairs	Maximum Cable Distance
1	2	100 m (328.08 ft)
2	2	100 m (328.08 ft)
3	4	100 m (328.08 ft)
4	4	100 m (328.08 ft)
5	6	100 m (328.08 ft)
6	6	100 m (328.08 ft)

When using specified cables and plug connectors approved for 100 MHz, the maximum cable distance is 100 m (328.08 ft) with a maximum of 6 connector pairs. A combination of a plug and a socket is considered 1 pair.

Use optic fiber cables with converters for greater distances.

Configuring a SafeEthernet protocol connection over Ethernet has the following advantages:

- very fast packet transfer between the collision areas
- significant increase of data throughput with full-duplex mode
- prevention of collisions to prevent deterministic operation

Non-Safety-Related Communication

5

At a Glance

Overview

The XPSMF40 provides safe communication via SafeEthernet as well as non-safe communication via Modbus SL, Modbus TCP/IP and Profibus DP. This chapter describes the non-safe communication.

What's in this Chapter?

This chapter contains the following sections:

Section	Topic	Page
5.1	Communication via Modbus Serial Line	79
5.2	Communication via Modbus TCP/IP	97
5.3	Communication via Profibus DP	101

5.1 Communication via Modbus Serial Line

At a Glance

Overview

This section provides information about non-safety-related communication via Modbus SL with the XPSMF40.

What's in this Section?

This section contains the following topics:

Topic	Page
Modbus Serial Line (SL)	80
Wiring	81
Technical Characteristics	83
Functions	85
Modbus SL RJ-45 Socket	87
Wiring Example via RJ-45	88
Wiring Example via Junction Boxes	91
Connection onto Screw Terminals	95

Modbus Serial Line (SL)

Modbus SL with XPSMF4020 / 4022

The XPSMF40 Safety PLC versions XPSMF4020 and XPSMF4022 are equipped with a Modbus Serial Line slave interface for non-safety-related data transfer.

Note: Safety-related communication is not possible with the Modbus SL interface.

The shielded RJ-45 connector for RS 485 (Modbus SL slave) is situated on the front plate of the device.

RS 485 Standard

The XPSMF4020 / XPSMF4022 complies with the RS 485 standard which allows variants of the following characteristics:

- polarization
- line terminator
- distribution of a reference potential
- number of slaves
- length of bus

For details on these characteristics refer to the Modbus specification published on *www.modbus.org*.

Wiring

Wiring Recommendations

For Modbus SL wiring consider the following:

- Use the Telemecanique cable with 2 pairs of shielded conductors (catalog number: TSXCSA100, TSXCSA200 or TSXCSA500).
- Keep the Modbus SL cable away from the power cables (minimum: 30 cm (11.81 in)).
- If it is necessary for the Modbus SL cable and the power cables to cross each other, be sure they cross at right angles.
- Whenever possible, connect the cable shielding to the protective ground, e.g. to the ground of each device if this ground is connected to the protective ground.
- Install a line terminator at both ends of the line
- Ensure the correct polarization of the line.
- Connect the common polarity (Common signal) to the protective ground at one or more points on the bus.

Wiring Example Modbus SL, Modbus TCP/IP and SafeEthernet

The following scheme shows an example of networking via Ethernet using SafeEthernet and Modbus TCP/IP protocols and using Modbus SL:

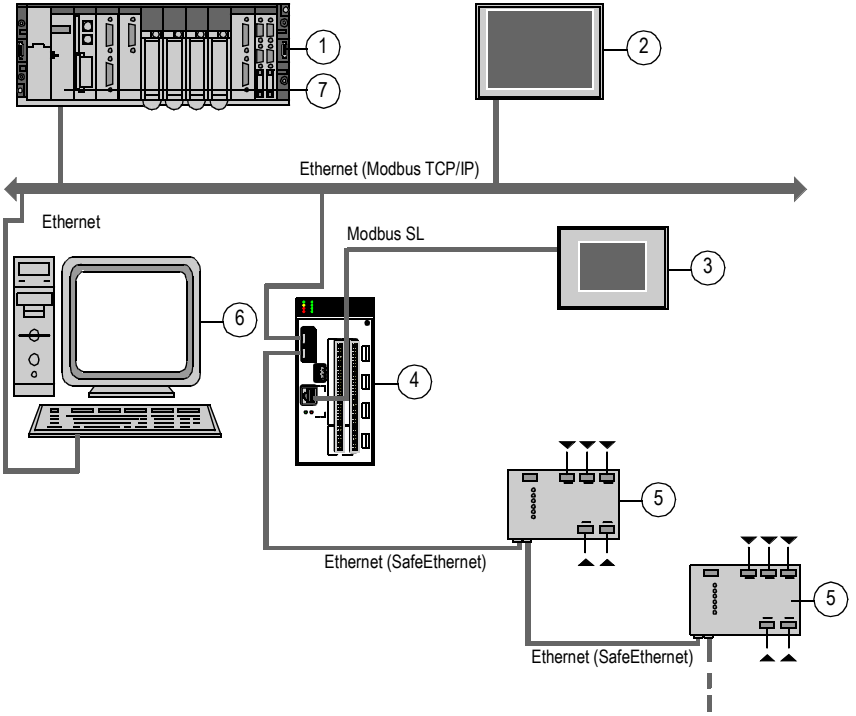

Elements of the network

No.	Element
1	Automation Platform Premium PLC
2	Magelis Graphic Terminal (e.g. XBTG)
3	Magelis Graphic Terminal (e.g. XBTG)
4	XPSMF40 Safety PLC
5	XPSMF 1/2/3 DIO/AIO Remote I/O
6	PC
7	TSX ETY100 (Modbus TCP/IP) Module

Technical Characteristics

Modbus SL Standard Schematic

The standard schematic corresponds to the Modbus SL specification published in 2002 on *www.modbus.org* and in particular to the schematic of the 2-wire multidrop serial bus.

The XPSMF4020 and XPSMF4022 comply with this specification.

Schematic diagram

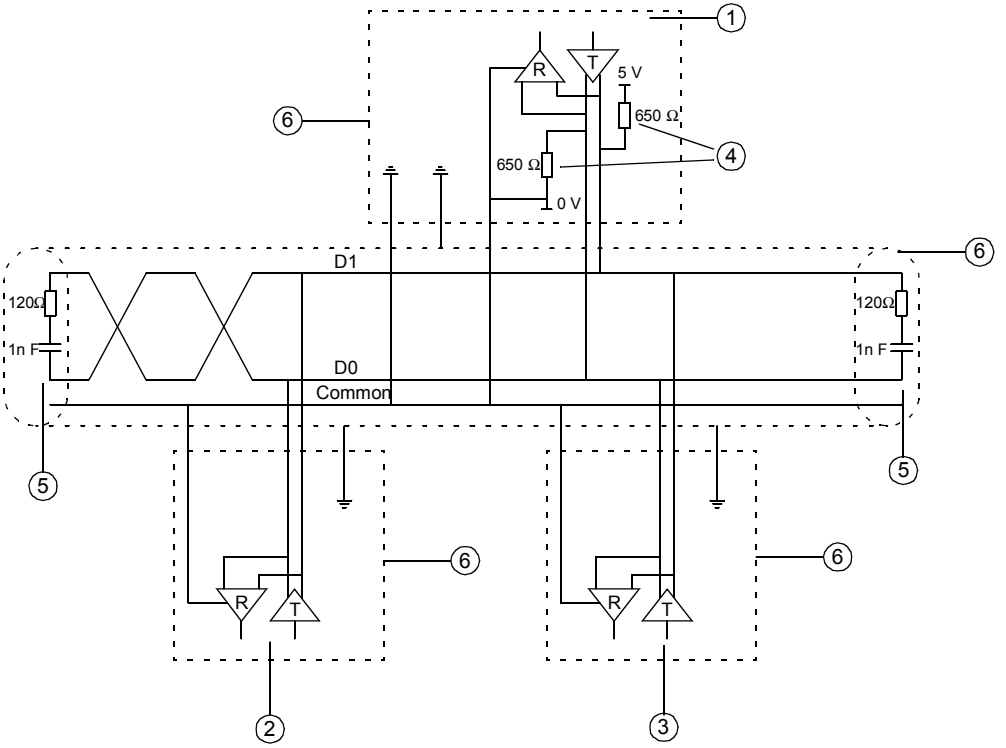

Elements of the application

No.	Element
1	master
2	slave 1
3	slave n
4	polarization resistors
5	line termination
6	shield

Type of Trunk Cable	shielded cable with 1 twisted pair and at least a third conductor
Maximum Length of Bus	1,200 m (3,936.99 ft) at 19,200 bps with the Telemecanique TSX CSA• cable
Maximum Number of Stations (without repeater)	32 stations, i.e. 31 slaves
Maximum Length of Tap Links	• 20 m (65.61 ft) for one tap link • 40 m (131.23 ft) divided by the number of tap links on a multiple junction box
Bus Polarization	• one 450...650 Ω pulldown resistor at 5 V (650 Ω or thereabouts recommended) • one 450...650 Ω pulldown resistor at Common (650 Ω or thereabouts recommended) This polarization is recommended for the master.
Line Terminator	one 120 Ω 0.25 W resistor in series with one 1 nF 10 V capacitor
Common Polarity	yes (Common), connected to the protective ground at one or more points on the bus

Max. Length of Modbus SL Network

The total length of the Modbus SL network with all branch lines can reach 1,200 m (3,936.99 ft). Bidirectional repeaters are required for greater lengths. In total, 3 repeaters can be used to reach a maximum range of 4,800 m (15,747.98 ft).

Modbus SL Bit Rates

Modbus SL supports the following bit rates:

- 115,200 bps
- 76,800 bps
- 62,500 bps
- 57,600 bps
- 38,400 bps
- 19,200 bps (default)
- 9600 bps
- 4,800 bps
- 2,400 bps
- 1,200 bps
- 600 bps
- 300 bps

Functions

Supported Modbus SL Functions

The following Modbus functions are supported by the Modbus SL slave:

Element	Code	Type	Description
READ COIL	01	BOOL	Reads several variables (BOOL) from the slave's import or export area.
READ DISCRETE INPUT	02	BOOL	Reads several variables (BOOL) from the slave's export area.
READ HOLDING REGISTER	03	WORD	Reads several variables of any type from the slave's import or export area.
READ INPUT REGISTER	04	WORD	Reads several variables of any type from the slave's export area.
READ WRITE HOLDING REGISTER	23	WORD	Writes several variables of any type to the slave's import area. Reads several variables of any type from the slave's import or export area.
WRITE MULTIPLE COIL	15	BOOL	Writes several variables (BOOL) in the slave's import area.
WRITE MULTIPLE REGISTER	16	WORD	Writes several variables of any type in slave's import area.
WRITE SINGLE COIL	05	BOOL	Writes 1 single variable (BOOL) in the slave's import area.
WRITE SINGLE REGISTER	06	WORD	Writes 1 single variable (WORD) in the slave's import area.
DIAGNOSTICS	08	x	Only subcode 0: loopback function of the slave (only for Modbus SL).
READ DEVICE IDENTIFICATION	43	x	Supply the slave's identification data to the master.

Read Device Identification

The XPSMF versions 4002, 4020, 4022 and 4042 supply identification data to the master and support the following object-IDs.

Basic:		
0x00	vendor name	Telemecanique
0x01	product code	XPSMF4020 and XPSMF4022
0x02	major minor revision	<CPU Vx.y CRC / COM Vx.y CRC>

Regular:		
0x03	vendor URL	*http://www.schneider-electric.com*
0x04	product name	Preventa Safety PLC
0x05	model name	XPSMF40
0x06	user application name	<user application name>[S.R.S] from XPSMFWIN factory project

Extended:		
0x80	CPU BS version / CRC	<Vx.y / 0x234adcef>
0x81	CPU OSL version / CRC	<Vx.y / 0x234adcef>
0x82	CPU BL version / CRC	<Vx.y / 0x234adcef>
0x83	COM BS version / CRC	<Vx.y / 0x234adcef>
0x84	COM OSL version / CRC	<Vx.y / 0x234adcef>
0x85	COM BL version / CRC	<Vx.y / 0x234adcef>
0x86	configuration-CRC	<0x234adcef>

RS 485 Transfer Mode System

The Modbus SL protocol communicates via the non-safe RS 485 transfer mode system.

The following table shows an overview of the basic physical features of the RS 485 transfer mode system:

Scope	Feature	Comment
Network Topology	linear bus, active bus termination on both ends	Branch lines should be avoided.
Medium	shielded twisted cable	- - -
Number of Slaves	32 slaves in each segment without repeater	with repeaters extendable up to 127 devices
Connector	8-pole RJ-45 connector	- - -

Modbus SL RJ-45 Socket

Modbus SL RJ-45 socket

The following table shows the pin assignment of the RJ-45 Modbus SL slave socket:

Connection	Signal	Function
1	- - -	- - -
2	- - -	- - -
3	- - -	- - -
4	D1 (B)	RS 485 signal
5	D0 (A)	RS 485 signal
6	- - -	- - -
7	5 V (30 mA)	VP
8	0 V	data reference potential (ground to VP)

Pin assignment of the Modbus SL RJ-45 socket

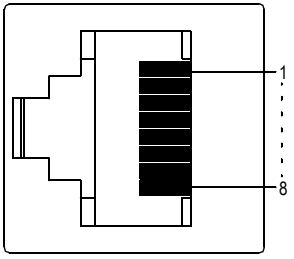

Wiring Example via RJ-45

Modbus SL Connection via RJ-45 Wiring System

The following scheme shows an example of connecting Modbus SL via an RJ-45 wiring system:

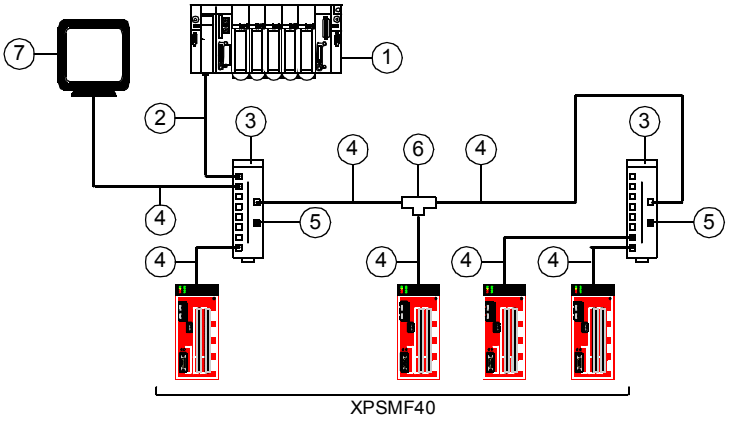

Elements of the application

No.	Element
1	master (PLC, PC or communication module)
2	Modbus SL cable depending on the type of master (see table below)
3	Modbus SL splitter block LU9 GC3
4	Modbus SL cables VW3 A8 306 R••
5	line terminators VW3 A8 306 RC
6	Modbus SL T-junction boxes VW3 A8 306 TF•• (with cable)
7	Magelis Graphic Terminal (e.g. XBT-GT••••) (provides the polarization of the Modbus SL field bus)

Accessories Depending on the Type of Master

The following table shows the accessories for the above application example, depending on the type of master:

Type of Master	Master Interface	Description	Cable Reference
Twido PLC (e.g. TWDLC•A•DRF, TWDLMDA•)	adaptor or mini-DIN RS 485 interface module	3 m (9.84 ft) cable equipped with a mini-DIN connector and an RJ-45 connector	TWD XCA RJ030
	adaptor or screw terminal RS 485 interface module	3 m (9.84 ft) cable equipped with an RJ-45 connector and stripped at the other end	VW3 A8 306 D30
TSX Micro PLC (e.g. TSX37•)	mini-DIN RS 485 connector port	3 m (9.84 ft) cable equipped with a mini-DIN connector and an RJ-45 connector	TWD XCA RJ030
	PCMCIA card (TSX SCP114)	stripped cable	TSX SCP CM 4030
TSX Premium PLC	TSX SCY 11601 or TSX SCY 21601 module (SUB-D 25 socket)	cable equipped with a SUB-D 25 connector and stripped at the other end (for connection to the screw terminals ot the LU9GC3 splitter block)	TSX SCY CM 6030
	PCMCIA card (TSX SCP114)	stripped cable	TSX SCP CM 4030
Ethernet bridge (174 CEV 300 10)	screw terminal RS 485	3 m (9.84 ft) cable equipped with an RJ-45 connector and stripped at the other end	VW3 A8 306 D30
Profibus DP gateway (LA9P307)	RJ-45 RS 485	1 m (3.28 ft) cable equipped with 2 RJ-45 connectors	VW3 P07 306 R10
• Fipio (LUFP1) or • Profibus DP (LUFP7) or • DeviceNet (LUFP9) gateway	RJ-45 RS 485	• 0.3 m (0.98 ft) cable equipped with 2 RJ-45 connectors or • 1 m (3.28 ft) cable equipped with 2 RJ-45 connectors or • 3 m (9.84 ft) cable equipped with 2 RJ-45 connectors	• VW3 A8 306 R03 or • VW3 A8 306 R10 or • VW3 A8 306 R30
Serial port PC	male SUB-D 9 RS 232 serial port PC	RS 232/RS 485 converter and 3 m (9.84 ft) cable equipped with an RJ-45 connector and stripped at the other end (for connection to the screw terminals of the LU9GC3 splitter block)	TSX SCA 72 and VW3 A8 306 D30

Further Accessories

The following table shows the accessories required for the above application example:

Accessory	Description	No.	Cable Reference
Modbus SL splitter block	10 RJ-45 connectors and 1 screw terminal block	3	LU9 GC3
Modbus SL T-junction boxes	• with integrated cable 0.3 m (0.98 ft) • with integrated cable 1 m (3.28 ft)	• 6 • 6	• VW3 A8 306 TF03 • VW3 A8 306 TF10
Line terminators (for RJ-45 connector)	R = 120 Ω, C = 1 nf	5	VW3 A8 306 RC

Cables

The following table shows the connecting cables required for the above application example:

Cable	Length	Connector	No. in Figure	Cable Reference
Modbus cables	3 m (9.84 ft)	1 RJ-45 connector and 1 stripped end		VW3 A8 306 D30
	0.3 m (0.98 ft)	2 RJ-45 connectors	4	VW3 A8 306 R03
	1 m (3.28 ft)	2 RJ-45 connectors	4	VW3 A8 306 R10
	3 m (9.84 ft)	2 RJ-45 connectors	4	VW3 A8 306 R30
Modbus cable (RS 485 double shielded twisted pair)	100 m (328.08 ft)	supplied without connector	7	TSX CSA 100
	200 m (656.16 ft)	supplied without connector	7	TSX CSA 200
	500 m (1640.41 ft)	supplied without connector	7	TSX CSA 500

Wiring Example via Junction Boxes

Modbus SL Connection via Junction Boxes

The following scheme shows an example of connecting Modbus SL via junction boxes:

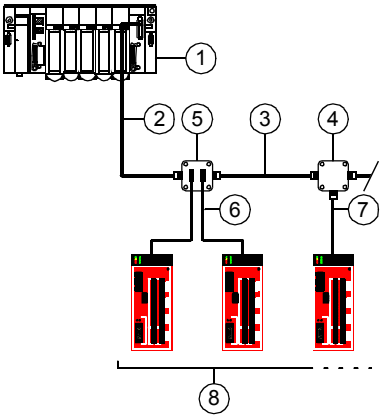

Elements of the application

No.	Element
1	Master (PLC, PC or communication module)
2	Modbus SL cable depending on the type of master (see table below)
3	Modbus SL cable TSX CSA•00
4	T-junction box TSX SCA 50
5	Subscriber sockets TSX SCA 62
6	Modbus SL drop cables VW3 A8 306
7	Modbus SL drop cable VW3 A8 306 D30
8	XPSMF4020 or XPSMF4022 safety PLCs

Accessories Depending on the Type of Master

Modbus SL connection accessories for junction boxes using SUB-D 15

Type of Master	Master Interface	Cable / Connector	Cable Reference
Twido PLC (e.g. TWDLC•A•DRF, TWDLMDA•)	adaptor or screw terminal RS 485 interface module	- - -	- - -
TSX Micro PLC (e.g. TSX37•)	mini-DIN RS 485 connector port	- - -	- - -
	PCMCIA card (TSX SCP114)	cable equipped with a special connector and a SUB-D 25 connector	TSX SCY CU 4530
TSX Premium PLC	TSX SCY 11601 or TSX SCY 21601 module (SUB-D 25 socket)	cable equipped with a SUB-D 25 connector and stripped at the other end	TSX SCP CU 4530
	PCMCIA card (TSX SCP114)	cable equipped with a special connector and stripped at the other end	TSX SCY CU 4530
Ethernet bridge (174 CEV 300 10)	screw terminal RS 485	- - -	- - -
Profibus DP gateway (LA9P307)	RJ-45 RS 485	- - -	- - -
• Fipio gateway (LUFP1) or • Profibus DP gateway (LUFP7) • DeviceNet (LUFP9) gateway	RJ-45 RS 485	3 m (9.84 ft) cable equipped with an RJ-45 connector and a SUB-D 25 connector	VW3 A8 306
Serial port PC	male SUB-D 9 RS 232 serial port PC	- - -	- - -

Modbus SL connection accessories for junction boxes using screw terminals

Type of Master	Master Interface	Cable / Connector	Cable Reference
Twido PLC (e.g. TWDLC•A•DRF, TWDLMDA•)	adaptor or screw terminal RS 485 interface module	Modbus SL cable	• TSX CSA100 or • TSX CSA200 or • TSX CSA500
TSX Micro PLC (e.g. TSX37•)	mini-DIN RS 485 connector port	tap junction	TSX P ACC 01
	PCMCIA card (TSX SCP114)	cable equipped with a special connector and stripped at the other end	TSX SCP CU 4030
TSX Premium PLC	TSX SCY 11601 or TSX SCY 21601 module (SUB-D 25 socket)	cable equipped with a SUB-D 25 connector and stripped at the other end	TSX SCY CM 6030
	PCMCIA card (TSX SCP114)	cable equipped with a special connector and stripped at the other end	TSX SCP CU 4030
Ethernet bridge (174 CEV 300 10)	screw terminal RS 485	Modbus SL cable	• TSX CSA100 or • TSX CSA200 or • TSX CSA500
Profibus DP gateway (LA9P307)	RJ-45 RS 485	3 m (9.84 ft) cable equipped with an RJ-45 connector and stripped at the other end	VW3 A8 306 D30
• Fipio (LUFP1) or • Profibus DP (LUFP7) or • DeviceNet (LUFP9) gateway	RJ-45 RS 485	3 m (9.84 ft) cable equipped with an RJ-45 connector and stripped at the other end	VW3 A8 306 D30
Serial port PC	male SUB-D 9 RS 232 serial port PC	RS 232/RS 485 converter and Modbus SL cable	• TSX SCA 72 and • TSX CSA100 or • TSX CSA200 or • TSX CSA500

Further Accessories

The following table shows the accessories required for the above application example:

Accessory	Description	No.	Cable Reference
Tap junction	3 screw terminals and an RC line terminator, to be connected using cable VW3 A8 306 D30	4	TSX SCA 50
Subscriber socket	2 female 15-way SUB-D connectors, 2 screw terminals and an RC line terminator, to be connected using cable VW3 A8 306 or VW3 A8 306 D30	5	TSX SCA 62

Cables

The following table shows the connecting cables required for the above application example:

Description	Length	Connectors	No. in Figure	Cable Reference
Modbus cables	3 m (9.84 ft)	1 RJ-45 connector and 1 stripped end	7	VW3 A8 306 D30
	3 m (9.84 ft)	1 RJ-45 connector and 1 male 15-way SUB-D connector for TSX SCA 62	6	VW3 A8 306
Modbus cable (RS 485 double shielded twisted pair)	100 m (328.08 ft)	supplied without connector	3	TSX CSA 100
	200 m (656.16 ft)	supplied without connector	3	TSX CSA 200
	500 m (1640.41 ft)	supplied without connector	3	TSX CSA 500

Connection onto Screw Terminals

Accessories for Connection onto Screw Terminals

The following table shows the accessories required for a Modbus SL connection onto screw terminals:

Accessory	Description		Cable Reference
Line terminators	for screw terminals	R = 120 Ω, C = 1 nf	VW3 A8 306 DRC

Cables for Connection onto Screw Terminals

The following table shows the connecting cables required for a Modbus SL connection onto screw terminals:

Description	Length	Connectors	Cable Reference
Modbus cable	3 m (9.84 ft)	1 RJ-45 connector and 1 stripped end	VW3 A8 306 D30
Modbus cables (RS 485 double shielded twisted pair)	100 m (328.08 ft)	supplied without connector	TSX CSA 100
	200 m (656.16 ft)	supplied without connector	TSX CSA 200
	500 m (1640.41 ft)	supplied without connector	TSX CSA 500

5.2 Communication via Modbus TCP/IP

At a Glance

Overview

This section provides information about non-safety-related communication via Modbus TCP/IP with the XPSMF40.

What's in this Section?

This section contains the following topics:

Topic	Page
Modbus TCP/IP	98
Wiring Example With SafeEthernet	99

Modbus TCP/IP

Overview

The XPSMF40 Safety PLC is equipped with connectors for field bus communication. It supports Modbus TCP/IP communication for non-safety-related data transfer.

IP Addressing

A transparent label provided with the safety PLC can be used to note the IP address and system ID (SRS, System-Rack-Slot) following a modification:

IP_._._._SRS_._._

Default value for IP address: 192.168.0.99

Default value for SRS: 60000.0.0

The ventilation slots in the housing of the Safety PLC must not be covered with the label.

For more information about changing the IP address and system ID, see the *XPSMFWIN First Steps manual*.

Note: Each Ethernet board has a unique Ethernet address. It is a 48-bit number: the first 24 bits indicate the manufacturer, whereas the last 24 bits are a unique number for each Ethernet board/controller-chip assigned by the manufacturer. The number is also called MAC ID.

TCP/IP Description

The IP address is an identifier for a device in a network. IP addresses are 32-bit numbers. To make it easier to memorize them, they are usually expressed in four 8-bit numbers (e.g. 192.168.10.1).

IP addresses are unique, which means that no other device within a network can share the same address:

- the IP address is assigned to the PC,
- another part of the IP address is the subnet mask, which distinguishes other networks.

Note: To ensure hacker and virus protection, a Safety PLC network must not be connected to any device which is attached to a company network or to the Internet.

Wiring Example With SafeEthernet

Scheme

The following scheme shows an example of Ethernet using SafeEthernet and Modbus TCP/IP protocols:

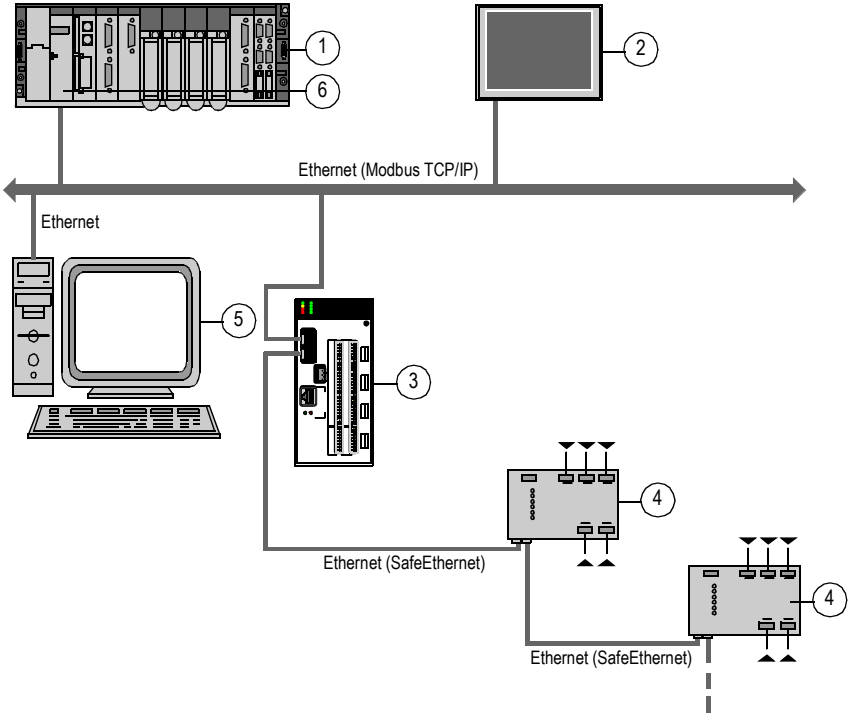

Elements of the network

No.	Element
1	Automation Platform Premium PLC
2	Magelis Graphic Terminal XBTG
3	XPSMF40 Safety PLC
4	XPSMF 1/2/3 DIO/AIO Remote I/O
5	PC
6	TSX ETY100 (Modbus TCP/IP) Module

Description

The above application shows the communication between a Safety PLC and a Premium PLC over Ethernet using Modbus TCP/IP protocol and Ethernet using SafeEthernet protocol. The data exchange between the Safety PLC and the Premium PLC is non-safety data transfer. The 2 systems can work together sending and receiving data in both directions using Modbus TCP/IP protocol. In this case, it allows non-safe data transfer over Ethernet through the master PLC.

Now, the data from a safety-related input can control a safety output within the Safety PLC system and a non-safety output through the Premium PLC system. The PLC system can transmit its non-safe data over Ethernet controlling a non-safety-related output. This allows the cabling system to be used to transfer both safe and non-safe data.

5.3 Communication via Profibus DP

At a Glance

Overview

This section provides information about non-safety-related communication via Profibus DP with the XPSMF40.

What's in this Section?

This section contains the following topics:

Topic	Page
Profibus DP	102
Function	103
Profibus DP SUB-D9 Connector	104
Wiring Example	105
Profibus DP Configuration Using Sycon 2.9	107
Profibus DP Configuration Using Unity Pro XL V2.1	121

Profibus DP

Overview

The XPSMF40 versions XPSMF4040 and XPSMF4042 are equipped with a Profibus DP communication interface for non-safety-related data transfer.

The 9-pin female SUB-D connector for Profibus DP connection is situated on the front plate of the device.

The connector and cable for connection to the Profibus DP must be ordered separately.

The Profibus DP interface complies with the Profibus DP test specification document *Profibus_DP_Slaves_2032_v20.pdf* by Profibus/PNO.

Function

Profibus DP GSD Files

To reduce the complexity of the planning, configuration and analysis processes of Profibus DP systems and to increase the security of the system, the so-called GSD files are provided.

The GSD files, that are only available in English, are electronic descriptions of the devices with the following sections:

Section	Description
File Info	description of the GSD file including time and date of creation, name of creator etc.
Device Info	description of the device including device name, name of vendor etc.
Mandatory Objects	objects that are mandatory in the object dictionary
Manufacturer Objects	access to the parameters of the device

The GSD file complies with the PNO standard No. 2.122 for DP devices.

RS 485 Transfer Mode System

The Profibus DP slave protocol communicates via the non-safe RS 485 transfer mode system.

The following table shows an overview of the basic physical features of the RS 485 transfer mode system:

Scope	Feature	Comment
Network Topology	linear bus, active bus termination on both ends	Branch lines should be avoided.
Medium	shielded twisted cable	- - -
Number of Stations	32 stations in each segment without repeater	with repeaters extendable up to 126 stations
Connector	9-pole SUB-MIN-D connector	- - -

Profibus DP SUB-D9 Connector

Pin Assignment

The following table shows the pin assignment of the Profibus DP SUB-D9 connector:

Pin	Signal	Description
1	shield	shield/functional ground
2	-	not used
3	RxD/TxD-P	receiving/transmitting data plus (B wire)
4	-	not used
5	DGND	data transfer reference potential (ground to 5 V)
6	VP	supply voltage of the termination resistors P (+ 5 V)
7	-	not used
8	RxD/TxD-N	receiving/transmitting data minus (A wire)
9	-	not used

Scheme

Pin assignment of the Profibus DP SUB-D9 connector

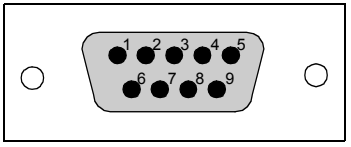

Configuration

Configure an address for the Profibus DP slave between 1 and 125 in the software.

Wiring Example

Connecting XPSMF4040 to Profibus DP

The following scheme shows an example of connecting the XPSMF4040 to Profibus DP.

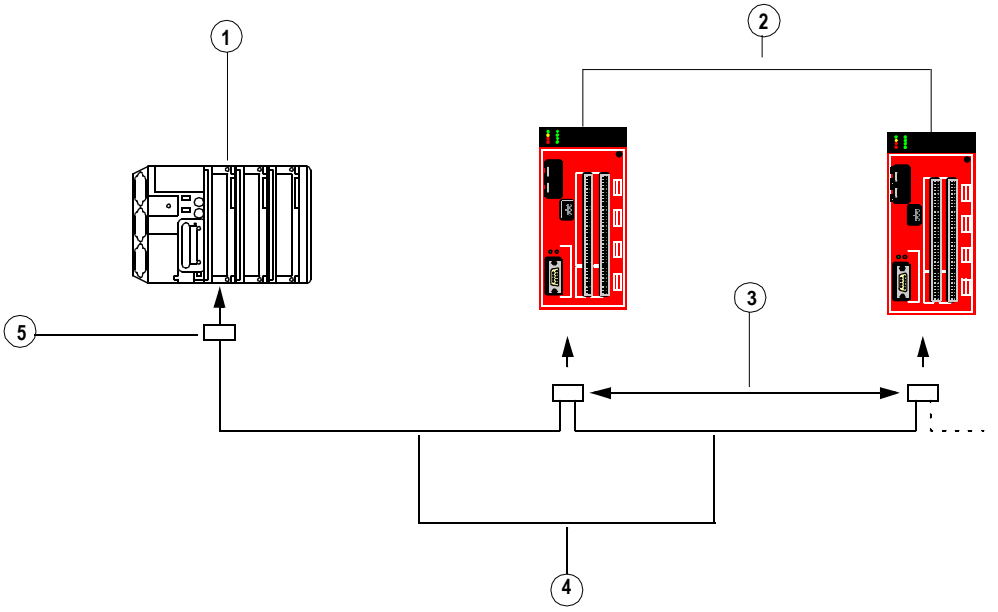

1 Profibus DP communication module: TSX PBY100
2 XPSMF40 safety PLC with Profibus DP connection
3 Intermediate connectors 490 NAD 911 04
4 Profibus DP connection cable TSX PBS CA•00
5 Connector with line terminator 490 NAD 911 03

Connectors

The following table lists the Profibus DP connection elements required for the above application example:

Description	Used	Cable Reference
Connectors	with line terminator	490 NAD 911 03
	intermediate connection	490 NAD 911 04
	intermediate connection and connector port	490 NAD 911 05

Cables

The following table lists the Profibus DP connection cables required for the above application example:

Description	Length	Cable Reference
Profibus DP connection cables	100 m (328.08 ft)	TSX PBS CA 100
	400 m (1312.33 ft)	TSX PBS CA 400

Covering Greater Distances

When you are using repeaters to cover great distances, consider the following.

- The bus ends with a line terminator at each end of the segment.
- Do not connect more than 32 stations per segment without a repeater, or more than 126 with a repeater.
- Keep the bus away from the power cables (minimum clearance: 0.3 m).
- If it is necessary that power cables cross each other, make sure that they cross at right angles.

Profibus DP Protocol

With the Profibus DP protocol data is exchanged according to the master-slave principle. This means that only the master can initialize communication. The slaves behave like servers, responding to requests from the masters.

Several masters can coexist on the same bus. In this case, the slave I/O can be read by all the masters. However, only one master has write access to the outputs. The number of data items exchanged is defined at the time of configuration.

A GSD file contains the configuration information for the XPSMF40 with Profibus DP. This file is used by the PLC during the configuration phases.

The GSD file is unique to the whole XPSMF40 range. It describes the communication information. The file is provided on the CD-ROM supplied with the device.

Profibus DP Configuration Using Sycon 2.9

Connecting the XPSMF40 with Profibus DP Using Sycon 2.9

This section describes the steps that have to be performed to configure the XPSMF40 Safety PLC via Profibus DP to the Profibus DP master (in the following example a Premium TSX with a TSX PBY 100 Profibus DP master interface from Schneider Electric). This fieldbus configuration is performed using Sycon 2.9 from Schneider Electric. The configuration of the PLC via Unity Pro by Schneider Electric is described in the next section.

Preparations

Before you start the fieldbus configuration, the GSD and DIB files must be available in the right directories. To ensure this, proceed as follows:

Step	Action
1	Copy the available GSD file into the directory *..\SyCon\Fieldbus\Profibus\GSD*.
2	Copy the available DIB file into the directory *..\SyCon\Fieldbus\Profibus\BMP*.

Preparations in the Sycon System Configurator

After you have copied the GSD and DIB files to these directories, proceed with the Sycon System Configurator:

Step	Action
1	Start the Sycon System Configurator.
2	In the Sycon System Configurator click **File** → **New** and select the entry PROFIBUS from the **Select fieldbus** dialog box to create a new Profibus DP configuration.

Configuring the Profibus DP Master

To configure the Profibus DP master module (in our example TSX PBY 100 from Schneider Electric), proceed as follows:

Step	Action
1	In the Sycon System Configurator click **Insert** → **Master** to insert a new Profibus DP master module.
2	Click on the empty space of the Sycon System Configurator to open the **Insert Master** dialog box.
3	In the **Insert Master** dialog box select the available master (in our example the TSX PBY 100 from Schneider Electric) in the list on the left-hand side and click **Add** to add it to the **Selected masters** list on the right-hand side. 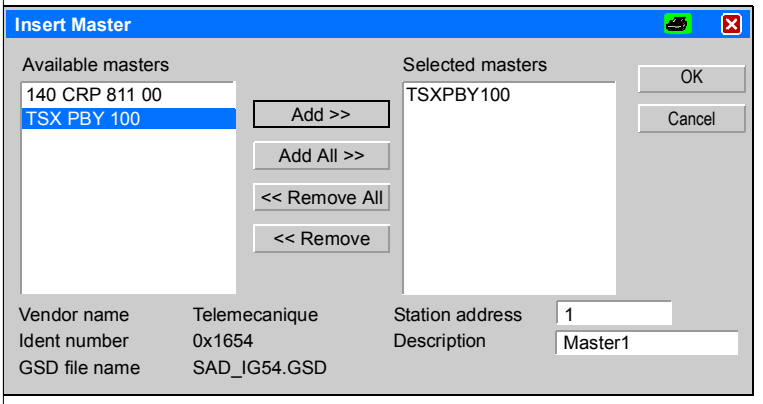
4	Enter a **Station address** for this master between 1 and 125 (default value: 1).
5	Enter a description for this master. Make sure not to enter spaces in the **Description** text box.
6	Click **OK** to confirm the **Insert Master** dialog box. The following symbol will be displayed on your Sycon System Configurator surface: 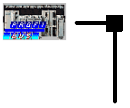

Configuring the Transmission Rate

After you have configured the Profibus DP master module, configure the transmission rate provided by your fieldbus:

Step	Action
1	In the Sycon System Configurator click **Settings** → **Bus Parameters** to open the **Bus Parameter** dialog box. 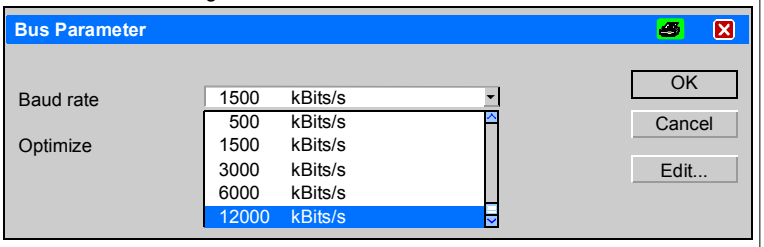
2	In the **Bus Parameter** dialog box select the transmission rate provided by your fieldbus from the **Baud rate** list.
3	Click **OK** to confirm the **Bus Parameter** dialog box.

Note

Note: Before you proceed with configuring slave modules, click **Settings** → **Master Configuration** and make sure that the **Auto addressing** option is activated to avoid overlapping addresses.

Configuring the XPSMF40 as Slave

If you are sure that the **Auto addressing** option is activated, configure the XPSMF40 as slave module:

Step	Action
1	In the Sycon System Configurator click **Insert** → **Slave** to insert the XPSMF40 as Profibus DP slave module.
2	Click near the already inserted master module on the Sycon System Configurator surface. The **Insert Slave** dialog box will be displayed.
3	In the **Insert Slave** dialog box select the XPSMF40 in the list on the left-hand side and click **Add** to add it to the **Selected slaves** list on the right-hand side. 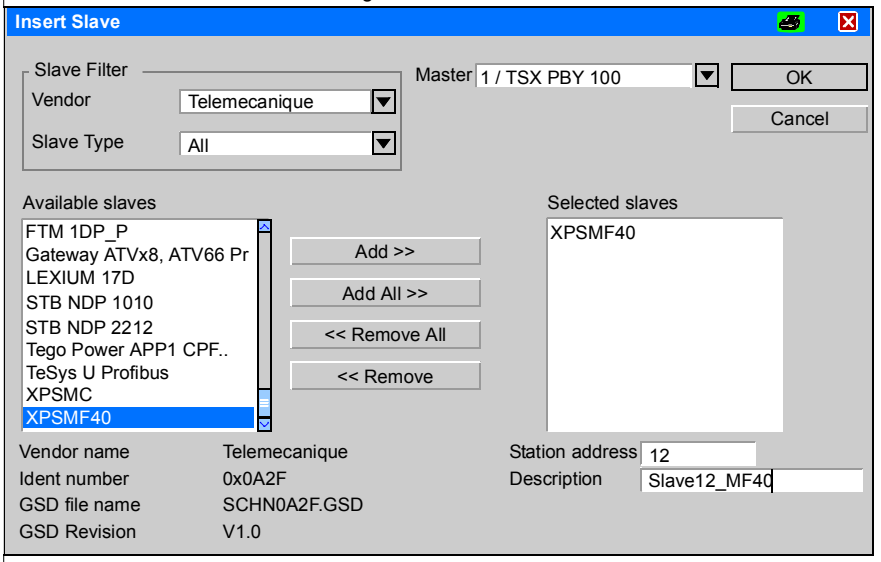
4	Enter a **Station address** for the XPSMF40 between 1 and 125.
5	Enter a description for the XPSMF40. Make sure not to enter spaces in the **Description** text box.

Process Data

Now that you have added the master (TSX PBY 100) and the slave (XPSMF40) to the configuration, you have to configure the process data for the XPSMF40:

- First of all, configure the size of the input / output modules.

To achieve this, select the number of `BYTE` or `WORD` modules from the **Inputs** / **Output** lists of the XPSMFWIN software according to your individual requirements. With these settings you configure the total amount of input / output data that is transferred between Profibus DP master and slave. For a configuration example see *Configuring the Size of the Input / Output Modules, p. 113*.

- Secondly, configure the specific number of signals and their offset in the 32 byte parameter data.

These settings indicate to the XPSMF40 Profibus DP slave the specific data, together with the respective length, it must transmit to or it will receive from the Profibus DP master. For a configuration example see *Configuring Number of Signals and Offset, p. 116*

Process Data Configuration Example

The following sections provide a configuration example for the transmission of 3 signal blocks including the following signals and data lengths:

Example of 3 signal blocks

Block	Signals	Total Block Length
1 Input	• Baud rate (UDINT, requiring 4 bytes) • Error code (DWORD, requiring 4 bytes) • Protocol state (BYTE)	9 bytes
2 Input	digital and analog inputs and outputs from the XPSMF40 to the TSX PBY 100 (summing up to a total of 3 BOOL, requiring 1 byte, and 2 UDINT, requiring 8 bytes)	9 bytes
3 Output	• 1 digital output to the XPSMF40 (1 BOOL, requiring 1 byte) • 1 analog output to the XPSMF40 (1 UDINT, requiring 4 bytes)	5 bytes

In the XPSMFWIN programming environment the XPSMF40 input signals are displayed as follows:

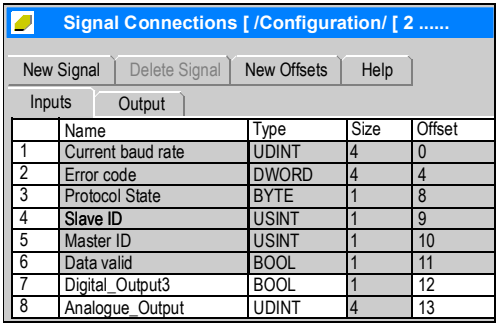

	Name	Type	Size	Offset
1	Current baud rate	UDINT	4	0
2	Error code	DWORD	4	4
3	Protocol State	BYTE	1	8
4	Slave ID	USINT	1	9
5	Master ID	USINT	1	10
6	Data valid	BOOL	1	11
7	Digital_Output3	BOOL	1	12
8	Analogue_Output	UDINT	4	13

In the XPSMFWIN programming environment the XPSMF40 output signals are displayed as follows:

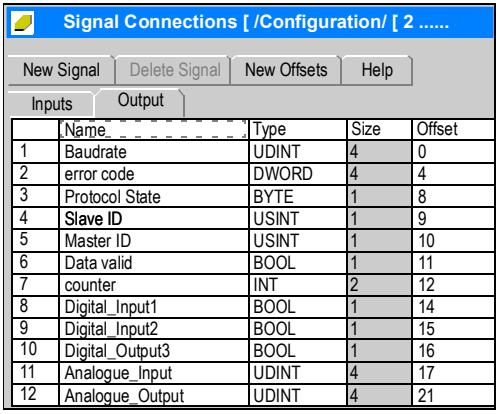

	Name	Type	Size	Offset
1	Baudrate	UDINT	4	0
2	error code	DWORD	4	4
3	Protocol State	BYTE	1	8
4	Slave ID	USINT	1	9
5	Master ID	USINT	1	10
6	Data valid	BOOL	1	11
7	counter	INT	2	12
8	Digital_Input1	BOOL	1	14
9	Digital_Input2	BOOL	1	15
10	Digital_Output3	BOOL	1	16
11	Analogue_Input	UDINT	4	17
12	Analogue_Output	UDINT	4	21

Configuring the Size of the Input / Output Modules

Configure the amount of input / output data that is transferred between Profibus DP master and slave as follows:

Step	Action
1	To configure the input / output modules, double-click the symbol of the XPSMF40 slave on the Sycon System Configurator surface. **Result:** The **Slave Configuration** dialog box opens.

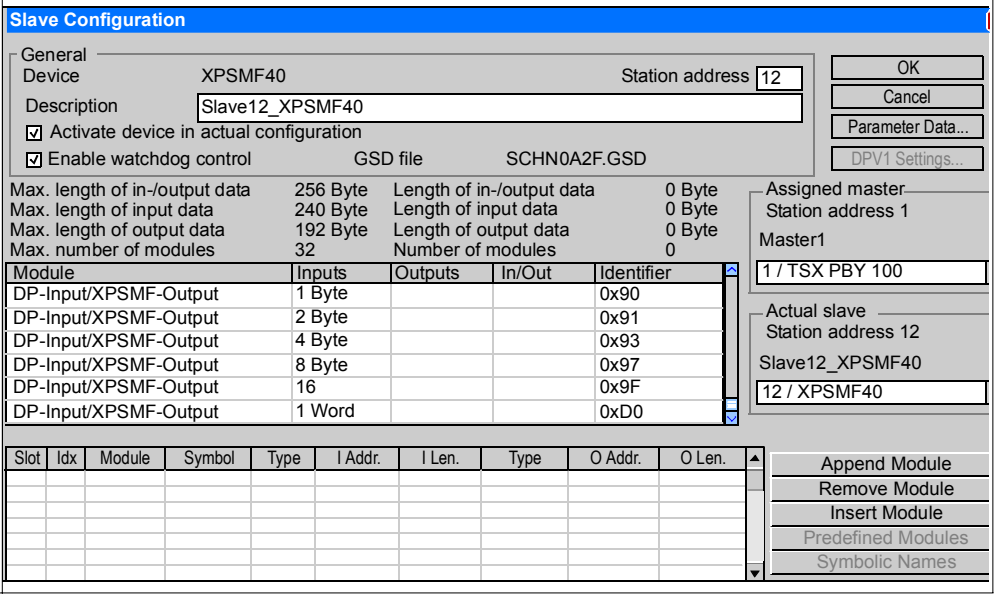

Step	Action
2	To configure the signals as proposed in the example *Process Data Configuration Example, p. 112*, double-click those modules you want to add to a block. **Result:** They will then be listed in the table below that will include your new blocks.
3	Click **OK** to confirm your settings.

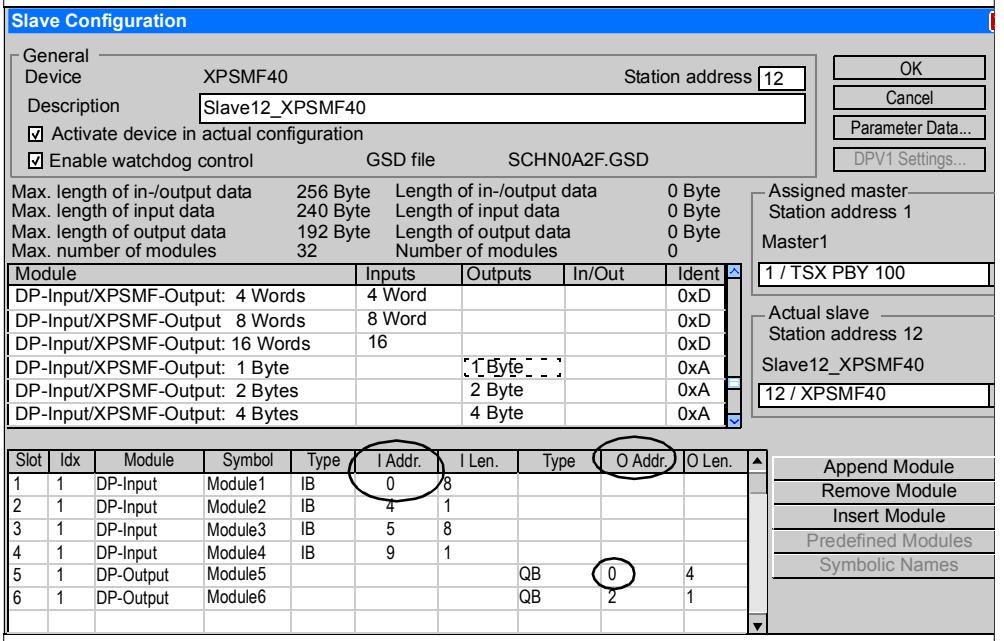

Calculating Index Numbers for XPSMF40

Before you start configuring parameter data for the slave, it is required that you become familiar with the calculation of index numbers, i.e. the parameters `Start index` and `Signal count`, in the XPSMF40.

Each input data block and output data block consists of a Start index and a Signal count parameter. Since the Start index parameters of the XPSMF40 do not start with 0, as other devices do, you have to calculate the correct input and output index numbers of the XPSMF40 before you configure these settings.

Calculating XPSMF40 Output Index Numbers

Since the output signals of the XPSMF40 start with 1, always subtract 1 from the signal number to start signal numbering with 0. For a concrete example see *Configuring Number of Signals and Offset, p. 116*.

Subtracting 1 from each output index number

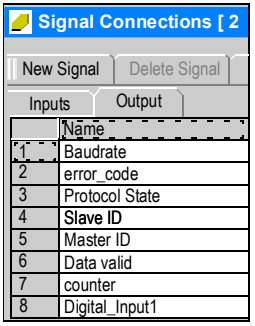

Index number – 1 = output index number

Calculating XPSMF40 Input Index Numbers

Since the first 6 input signals of the XPSMF40 are assigned to predefined signals, they cannot be transferred via Profibus DP. In order to start signal numbering with 0, always subtract 7 from the signal number. For a concrete example see *Configuring Number of Signals and Offset, p. 116*.

Subtracting 7 from each input index number

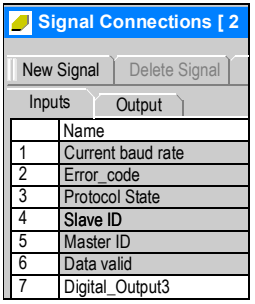

Index number – 7 = input index number

Configuring Number of Signals and Offset

To configure the specific data, including the respective length, the XPSMF40 must transmit to or will receive from the TSX PBY 100, referring to the example *Process Data Configuration Example, p. 112*, proceed as follows:

Step	Action
1	In the **Slave Configuration** dialog box click the **Parameter Data...** button to open the **Parameter Data** dialog box.
2	By default, this dialog will be displayed in hexadecimal format. In order to get information in plain text, click the **Common** button. **Result:** The **Parameter Data** dialog box will be displayed in **Common Parameter Data** view. 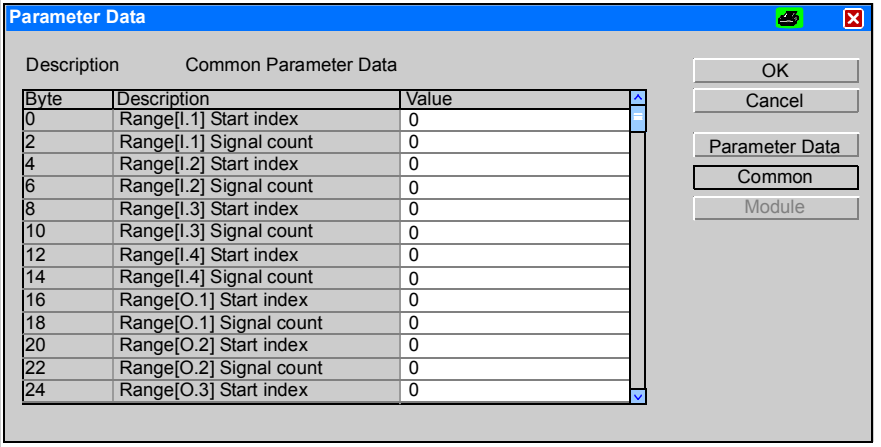 The parameters `Range[I.x] Start index` and `Range[I.x] Signal count` represent the specific input data block 1–4 and the parameters `Range[O.x] Start index` and `Range[O.x] Signal count` represent the specific output data block 5–8.
3	Now configure the first of the three example blocks (Baud rate, Error code, Protocol state). Since this first block starts with the first signal, you do not have to configure the signal start but only the length of the signal. To achieve this, double-click the entry **Range[I.1] Signal count** of the **Parameter Data** dialog box (displayed in **Common Parameter Data** format).
4	In the **Range[I.1] Signal count** dialog box enter the **Value** `3` because the first block consists of 3 signals. 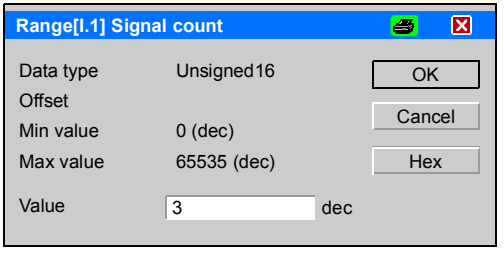 Click **OK** to confirm your settings.

Step	Action
5	For the second data block (analog inputs and outputs) first of all calculate the `Start index` as well as the `Signal count`. `Start index`: Since the first signal to be transmitted in the second block is the signal Digital_Input1, which is the eighth signal, the `Start index` is 7 (index number - 1 = 7). `Signal count`: Since 5 signals are to be transmitted in this block, the `Signal count` value is 5.
6	Double-click the entry **Range[I.2] Start index** of the **Parameter Data** dialog box (displayed in **Common Parameter Data** format) In the **Range[I.2] Start index** dialog box enter the **Value** `7` because the first signal to be transmitted in the second block is the eighth signal (Digital_Input1). 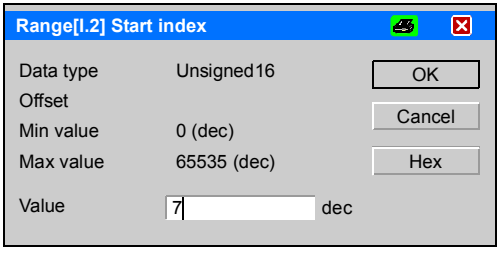 Click **OK** to confirm your settings.
7	Double-click the entry **Range[I.2] Signal count** of the **Parameter Data** dialog box (displayed in **Common Parameter Data** format). In the **Range[I.2] Signal count** dialog box enter the **Value** `5` because 5 signals should be transmitted in the second block. 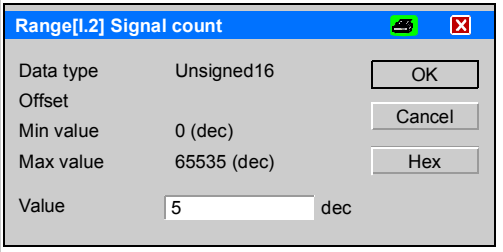 Click **OK** to confirm your settings.
8	Now configure the third data block, which is an output block. Since this block starts with the first signal, as the first block, you do not have to configure the `Range[O.1] Start index` parameter. To configure the length of this block, double-click the entry **Range[O.1] Signal count** of the **Parameter Data** dialog box (displayed in **Common Parameter Data** format).

Step	Action
5	For the second data block (analog inputs and outputs) first of all calculate the `Start index` as well as 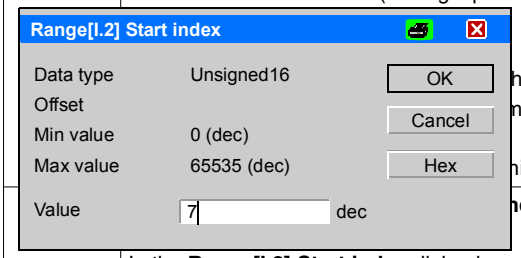 he second block is the signal Digital_Input1, which is the eighth nber - 1 = 7). his block, the `Signal count` value is 5. **ndex** of the **Parameter Data** dialog box (displayed in **Common** In the **Range[I.2] Start index** dialog box enter the **Value** `7` because the first signal to be transmitted in the second block is the eighth signal (Digital_Input1). 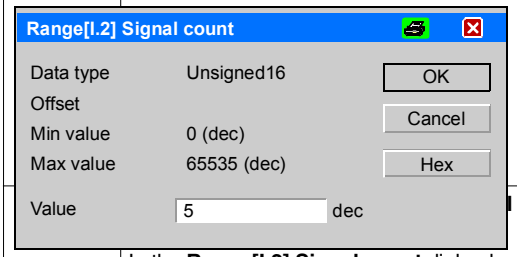 **l count** of the **Parameter Data** dialog box (displayed in In the **Range[I.2] Signal count** dialog box enter the **Value** `5` because 5 signals should be transmitted in the second block. Click **OK** to confirm your settings.
8	Now configure the third data block, which is an output block. Since this block starts with the first signal, as the first block, you do not have to configure the `Range[O.1] Start index` parameter. To configure the length of this block, double-click the entry **Range[O.1] Signal count** of the **Parameter Data** dialog box (displayed in **Common Parameter Data** format).

Step	Action
9	In the **Range[O.1] Signal count** dialog box enter the **Value** 2 because the third block consists of two signals, one digital and one analog output. 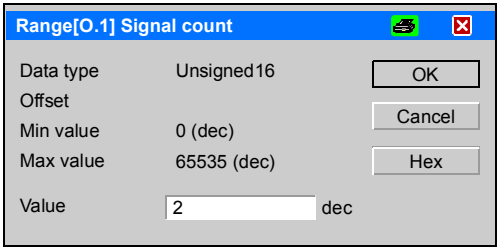 Click **OK** to confirm your settings.
10	The **Parameter Data** dialog box (displayed in **Common Parameter Data** format) now includes the three data blocks you have just configured. 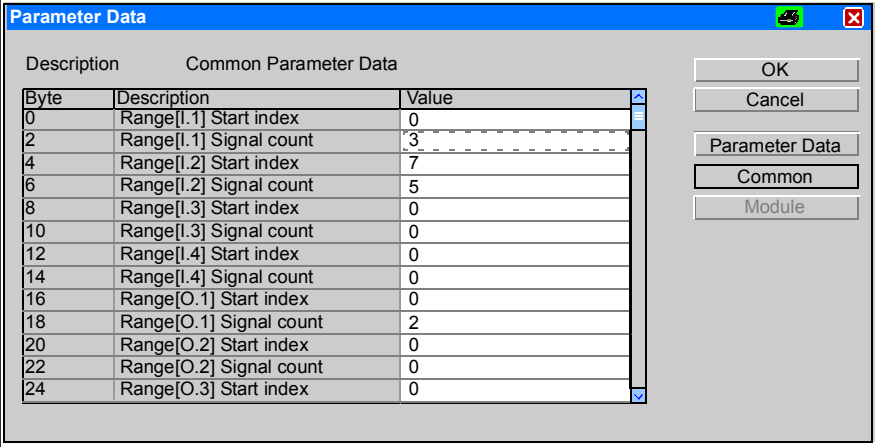 Click **OK** to confirm your settings.
11	Click **File** → **Save as...** to save your configuration. The following symbols will be displayed on your Sycon System Configurator surface: 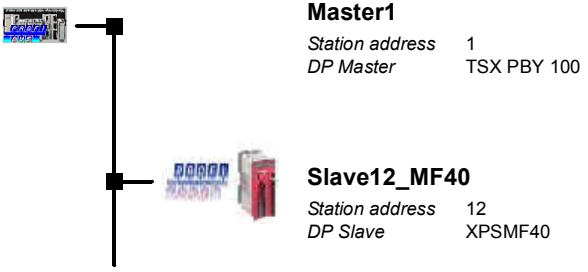

Byte	Description	Value
0	Range[I.1] Start index	0
2	Range[I.1] Signal count	3
4	Range[I.2] Start index	7
6	Range[I.2] Signal count	5
8	Range[I.3] Start index	0
10	Range[I.3] Signal count	0
12	Range[I.4] Start index	0
14	Range[I.4] Signal count	0
16	Range[O.1] Start index	0
18	Range[O.1] Signal count	2
20	Range[O.2] Start index	0
22	Range[O.2] Signal count	0
24	Range[O.3] Start index	0

Exporting the Configuration File

In order to import the configuration settings into a Profibus DP master software, e.g. Unity Pro, you have to export the settings as described below.

Step	Action
1	Select the **Master1** symbol in the graphical overview and click **File** → **Export** → **ASCII** to export your configuration to a CNF file.
2	Import this configuration file into your Profibus DP master software, e.g. Unity Pro.

Profibus DP Configuration Using Unity Pro XL V2.1

Configuring Profibus DP Using Unity Pro XL V2.1

The following table shows the steps required to configure the Profibus DP master using Unity Pro XL V2.1 from Schneider Electric. For further information on Unity Pro XL V2.1 refer to the *Unity Pro User Manual*.

Step	Action
1	Start Unity Pro and create a new project.
2	Define your PLC configuration with the Profibus DP master (TSX PBY 100). Example PLC configuration 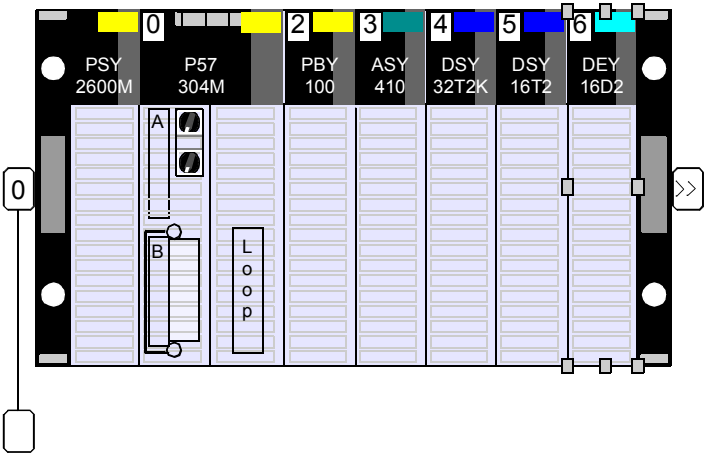
3	Double-click the Profibus DP master module **TSX PBY100**. Result: The configuration dialog box of the Profibus DP module will be displayed.

Step	Action
4	In the **TSX PBY 100** dialog box click the **Load CNF** button. 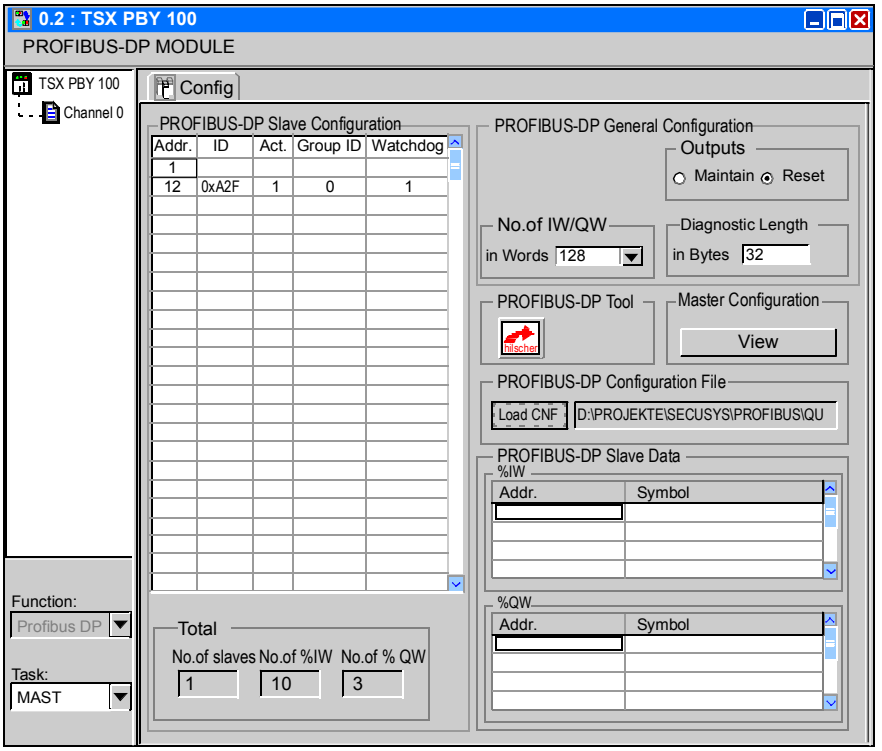 Result: A **Browse...** dialog box opens, providing you the chance to search for the configuration file exported from the Sycon System Configurator software.
5	After you have imported the configuration file, click this button in the command line to validate the Profibus DP configuration: 
6	After you have written your PLC program, click this button to build the whole project: 
7	Click this button to connect to the PLC: 

Step	Action
8	To transfer the whole project to the PLC, click this button:  After successful data transfer the whole project with all configuration settings is stored on the PLC.
9	Click this button to start the PLC:  Result: After successful connection to the PLC, the **Debug** tab will be displayed: 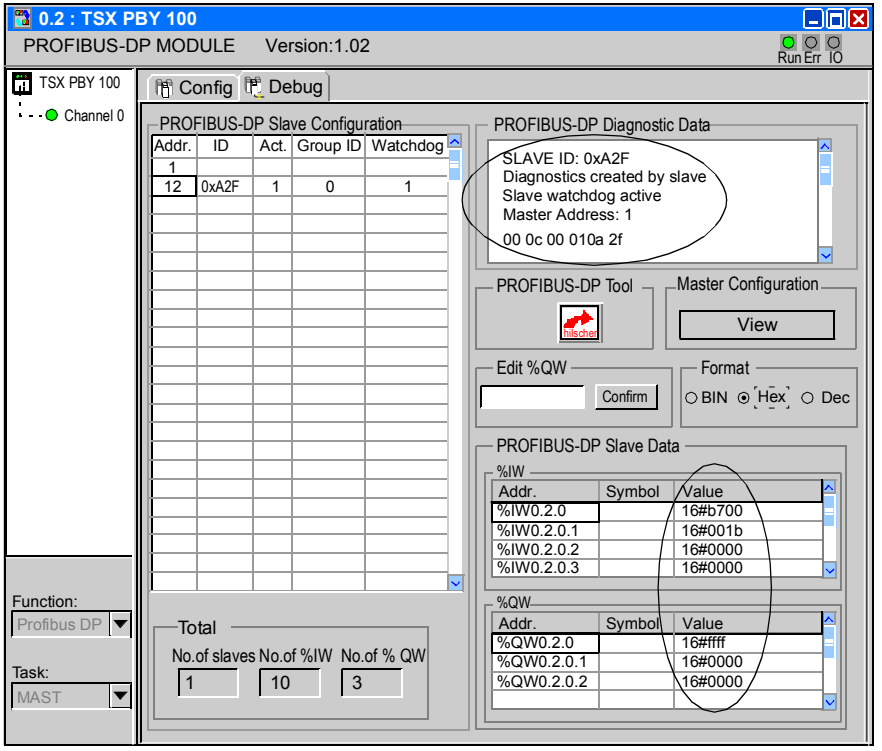 The **Debug** tab indicates the values of the inputs and outputs in the bottom right corner and diagnostic data in the upper right corner.

Appendices



At a Glance

Overview

Additional information that is not necessarily required to understand the documentation.

What's in this Appendix?

The appendix contains the following chapters:

Chapter	Chapter Name	Page
A	Error Codes	127

Error Codes

A

List of Error Codes

Description of Error Codes

The error codes listed in this section appear in the XPSMFWIN programming environment.

The following table lists the error codes for the board, the digital inputs and outputs as well as the TOs:

Name	Read/Write	Type	Meaning
Board SRS	R	udword	slot number (system-rack-slot)
Board Type	R	uword	hardware type of module, setpoint: 0x004C
Board State	R	uword	error code of module error
DI State	R	uword	error code of the entire digital input unit
DI [12] State	R	ubyte	error code of the individual digital input channels
DI [12] Value	R	bool	input values of the individual digital input channels 1 = output is set 0 = output is not set
DI Pulse Slot	W	udword	slot number of clock master module (LS/LB detection)
DI Number of Pulse Channel	W	ubyte	number of pulsed channels 0 = no output channel reserved for LS/LB detection on DI 1 = output channel 1 reserved for LS/LB detection on DI 4 = output channels 1...4 reserved for LS/LB detection on DI **Note:** Pulsed outputs must not be used as safety-related outputs.
DI [12] Pulse Channel	W	ubyte	clock master channel 0 = input channel 1 = 1. digital output channel is clock master 2 = 2. digital output channel is clock master 3 = 3. digital output channel is clock master 4 = 4. digital output channel is clock master
DI LC Delay	W	uword	waiting time for Line Control (short circuits) in µs (i.e. in $1x10^{-6}$ seconds)

DO State	R	uword	error mask of the entire digital output unit
DO [12] State	R	ubyte	error mask of the individual digital output channels
DO [12] Value	R	bool	output values of the individual digital output channels: 1 = output is set 0 = output is not set
DO [12] ChnUsed	W	bool	parameterization of digital output channels: 1 = digital output can be set with setpoint 1 0 = digital output cannot be set

TO State	R	uword	error code of the entire TO unit
TO [8] State	R	ubyte	error code of the individual TO channels
TO [8] Value	R	bool	output values of the individual TO channels: 1 = output is set 0 = output is not set **Note:** Outputs must not be used as safety-related outputs.

The following table lists the different states of the digital outputs:

DO State	**Meaning**
0x0001	error of module
0x0002	MFOT test of safety shutdown failed
0x0004	MFOT test of auxiliary voltage failed
0x0008	FTT test of test pattern test failed
0x0010	MFOT test of test pattern test of output switches failed
0x0020	MFOT test of test pattern test of output switches (disconnection test of outputs) failed
0x0040	MFOT test active disconnection via watchdog failed
0x0100	outputs 1...4 and 9...12 switched off since total current exceeded
0x0200	outputs 5...8 and 13...16 switched off since total current exceeded
0x0400	FTT test: 1. temperature threshold exceeded
0x0800	FTT test: 2. temperature threshold exceeded
0x1000	FTT test: monitored auxiliary voltage 1 has undervoltage
0x2000	FTT test: monitored auxiliary voltage 2 has undervoltage

The following table lists the different states of the digital output 12:

DO [12] State	Meaning
0x01	error of digital output unit or module
0x02	output switched off due to overcurrent
0x04	error when reading back the activation of the digital outputs
0x08	error when reading back the status of the digital outputs
0x40	output cannot be controlled (wrong parameter settings)

The following table lists the state of the TO:

TO State	Meaning
0x0001	error of the entire unit

The following table lists the state of the TO 8:

TO [8] State	Meaning
0x01	error of TO module or unit

The following table lists the states of the digital inputs:

DI State	Meaning
0x0001	error of the entire unit
0x0002	FTT test of test pattern test failed

The following table lists the states of the digital input 12:

DI [12] State	Meaning
0x01	error of digital input unit
0x10	error short-circuit of the channel
0x80	line interrupt between pulsed output DO and pulsed input DI, e.g. ● line break ● open switch ● L+ undervoltage

Glossary

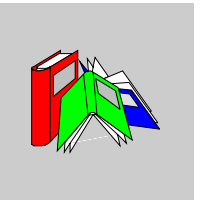

A

AWG	American wire gauge (wire diameter)

C

COM	communication module
CPU	central processing unit

D

DI	digital input
DIO	digital input/output
DO	digital output

E

EMC	electromagnetic compatibility
EN	European standards

F

FB	field bus
FBD	functional block diagram
FTT	fault tolerance time

I

IEC	international electrotechnical commission

L

LC	line control

M

MFOT	multi-fault occurrence time
Modbus SL	Modbus serial line

N

NSP	non-safety-related protocol

O

OLE	object linking and embedding
OSI Model	open system interconnection model

P

PELV	protected extra low voltage
PES	programmable electronic system
PFD	probability of failure on demand
PFH	probability of failure per hour

R

R	read
R/W	read/write
RC	requirement class
rpp	ripple peak-to-peak of DC voltage

S

SELV	safety extra low voltage
SFC	sequential function chart
SIL	safety integrity level (according to EN/IEC 61508)
SRS	system-rack-slot

T

TMO	timeout

W

W	write
WD	watchdog
WDT	watchdog time

Index

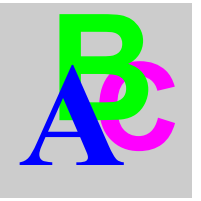

A

accessories
- Modbus SL connection onto screw terminals, 95
- Modbus SL RJ-45 application, 89
- Modbus SL via junction boxes, 92

additional items, 58
application, 23

B

bit rate
- Modbus SL, 84

block diagram XPSMF4000, 24
block diagram XPSMF4002, 24
block diagram XPSMF4020, 25
block diagram XPSMF4022, 25
block diagram XPSMF4040, 25
block diagram XPSMF4042, 25

C

cable disconnection, 34
cables
- Modbus SL connection onto screw terminals, 95
- Modbus SL RJ-45 application, 90
- Modbus SL via junction boxes, 94

climatic conditions, 50
cold swapping, 37
communication
- Modbus SL, 79
- Modbus TCP/IP, 97
- non-safety-related, 77
- Profibus, 101
- safety-related, 61, 63

connection with existing configuration and program, 22
connection with Profibus DP and Sycon 2.9, 107
connections for SafeEthernet, 67

D

description of error codes, 127
diagnostics, 37
DIB, 107
dimensions, 14

E

EMC conditions, 51
equipment description, 41
error codes, 127
Ethernet cable connection diagram, 74
Ethernet LEDs, 48
Ethernet networking example, 72
Ethernet wiring, 70
example
- Profibus DP, 107
- Sycon 2.9, 107

export configuration file, 120

F

first power-up, 22
front view XPSMF4000, 11
front view XPSMF4000 / 4002, 42
front view XPSMF4002, 11
front view XPSMF4020, 12
front view XPSMF4020 / 4022, 43
front view XPSMF4022, 12
front view XPSMF4040, 13
front view XPSMF4040 / 4042, 44
front view XPSMF4042, 13
function, 24
functions, 85

G

GSD file, 103

H

high temperature, 19
hot swapping, 36
housing elements, 42

I

initial operation, 22
installation, 16
interface elements, 70
internal convection, 18
introduction, 10
IP addressing
    Modbus TCP/IP, 98

L

large system reconfiguration, 35
LED description, 46
LEDs, 46
length of Modbus SL network, 84
line control, 27
list of additional items, 58

M

maintenance, 38
mechanical conditions, 51
mechanical data, 53
Modbus Serial Line, 79
Modbus SL, 80
    bit rate, 84
Modbus SL connection onto screw terminals, 95
Modbus SL connection via junction boxes, 91
Modbus SL connection via RJ-45, 88
Modbus SL functions, 85
Modbus SL LEDs, 49
Modbus SL RJ-45 socket, 87
Modbus SL schematic, 83
Modbus TCP/IP, 97, 98

O

operating conditions, 50
operating temperature
    indication, 37
operation parameters of the Ethernet interfaces, 67
OSI model, 68

P

power supply connectors, 53
power supply interruption, 35
power supply status
    indication, 37
process data
    Profibus DP, 111, 116
Profibus, 101, 102
Profibus DP
    configuration, 121
    Sycon 2.9, 107
Profibus DP and Sycon 2.9 connection, 107
Profibus DP connection, 105
Profibus DP GSD file, 103
Profibus DP LEDs, 49

Profibus DP protocol, 106
Profibus DP SUB-D9 connector, 104
pulsed outputs, 28

R

read device identification, 86
repair of PLC devices, 38
replacing faulty modules, 37
representation, 11
reset button, 45
RJ-45 connector, 71
RJ-45 socket, 87
RS 485 standard, 80
RS 485 transfer mode system, 86, 103

S

SafeEthernet, 64
SafeEthernet networking example, 73
safety-related communication, 63
safety-related digital inputs, 29
safety-related digital outputs, 32
short-circuit characteristics of the output channels, 36
signal line connectors, 53, 54
small system reconfiguration, 35
specified cables, 71
stripping length and torque, 53, 54
SUB-D9 connector
    Profibus DP, 104
supply voltage, 57
surge on digital inputs, 33
switch for Ethernet communication, 66
switches, 71
Sycon 2.9, 107
Sycon 2.9 and Profibus DP connection, 107

T

TCP/IP description, 98
technical characteristics, 53, 70, 83
technical data, 55
temperature state/operating temperature, 18
testing I/Os for interference voltage and earth faults, 38
torque, 54

U

Unity Pro, 121
using reset button, 45

V

very high temperature, 19
voltage supply, 52

W

wiring
    Modbus SL, 81
wiring example Modbus Serial Line, Modbus TCP/IP, SafeEthernet, 82
wiring example Modbus TCP/IP and SafeEthernet, 99
wiring recommendations Modbus SL, 81