Product data sheet

Specifications



Pilot light, Harmony XB5, white, plastic, 22mm, plain lens, BA9s bulb, 250V

XB5AV61

Main

Range of product	Harmony XB5
Product or component type	Pilot light
Device short name	XB5
Bezel material	Dark grey plastic
Fixing collar material	Plastic
Head type	Standard
Mounting diameter	22.5 mm
Sale per indivisible quantity	1
Shape of signaling unit head	Round
Cap/operator or lens colour	White
Operator additional information	With plain lens
Light source	Bulb not included
Bulb base	BA 9s
Light block supply	Direct <2.4 W
Light source colour	White
[Us] rated supply voltage	<= 250 V
[Us] rated supply voltage	<= 250 V

Complementary

Height	42 mm
Width	30 mm
Depth	55 mm
Terminals description ISO n°1	(X1-X2)PL
Net weight	0.037 kg
Resistance to high pressure washer	7000000 Pa at 55 °C, distance : 0.1 m
Connections - terminals	Screw clamp terminals, <= 2 x 1.5 mm² with cable end conforming to IEC 60947-1 Screw clamp terminals, 1 x 0.22...2 x 2.5 mm² without cable end conforming to IEC 60947-1
[Ui] rated insulation voltage	250 V (pollution degree 3) conforming to IEC 60947-1
[Uimp] rated impulse withstand voltage	4 kV conforming to IEC 60947-1
Signalling type	Steady
Device presentation	Complete product

Disclaimer: This documentation is not intended as a substitute for and is not to be used for determining suitability or reliability of these products for specific user applications

Environment

Protective treatment	TH
Ambient air temperature for storage	-40…70 °C
Ambient air temperature for operation	-40…55 °C
Electrical shock protection class	Class II conforming to IEC 60536
Overvoltage category	Class II conforming to IEC 60536
IP degree of protection	IP66 conforming to IEC 60529 IP67 conforming to IEC 60529 IP69 conforming to IEC 60529 IP69K conforming to ISO 20653
Enclosure Type	UL type 4X/13
IK degree of protection	IK05 conforming to IEC 50102
Standards	UL 508 IEC 60947-5-1 CSA C22.2 No 14 IEC 60947-1 IEC 60947-5-4 JIS C8201-5-1 JIS C8201-1
Product certifications	UL listed CSA
Vibration resistance	5 gn (f= 12…500 Hz) conforming to IEC 60068-2-6
Shock resistance	30 gn (duration = 18 ms) for half sine wave acceleration conforming to IEC 60068-2-27 50 gn (duration = 11 ms) for half sine wave acceleration conforming to IEC 60068-2-27

Packing Units

Unit Type of Package 1	PCE
Number of Units in Package 1	1
Package 1 Height	3.700 cm
Package 1 Width	5.500 cm
Package 1 Length	9.000 cm
Package 1 Weight	35.000 g
Unit Type of Package 2	S03
Number of Units in Package 2	150
Package 2 Height	30.000 cm
Package 2 Width	30.000 cm
Package 2 Length	40.000 cm
Package 2 Weight	5.669 kg
Unit Type of Package 3	P06
Number of Units in Package 3	1200
Package 3 Height	75.000 cm
Package 3 Width	60.000 cm
Package 3 Length	80.000 cm
Package 3 Weight	53.804 kg

Contractual warranty

Warranty (in months)	18

Environmental Data

Schneider Electric aims to achieve Net Zero status by 2050 through supply chain partnerships, lower impact materials, and circularity via our ongoing “Use Better, Use Longer, Use Again” campaign to extend product lifetimes and recyclability.

Environmental Data explained >

How we assess product sustainability >

Environmental footprint

Total lifecycle Carbon footprint	**102 kg CO2 eq.**
Carbon footprint of the manufacturing phase [A1 to A3]	**0.3 kg CO2 eq.**
Carbon footprint of the distribution phase [A4]	**0 kg CO2 eq.**
Carbon footprint of the installation phase [A5]	**0 kg CO2 eq.**
Carbon footprint of the use phase [B2, B3, B4, B6]	**102 kg CO2 eq.**
Carbon footprint of the end-of-life phase [C1 to C4]	**0.1 kg CO2 eq.**

Use Better

Materials and Substances

Average percentage of recycled plastic content	**21 %**
Average percentage of recycled metal content	**7 %**
Packaging made with recycled cardboard	**Yes**
Packaging without single use plastic	**Yes**
SCIP Number	**467c0294-dff9-4fcc-a83b-a07289eaaf07**
EU RoHS Directive	Compliant By Exemption
REACh Regulation	Reference contains Substances of Very High Concern above the threshold
California proposition 65	**WARNING: This product can expose you to chemicals including: Lead and lead compounds, which is known to the State of California to cause cancer and birth defects or other reproductive harm. For more information go to www.P65Warnings.ca.gov**

Use Longer

Lifetime extension

Product repair index	**A**

Use Again

Repack and remanufacture

Recyclability potential, in %	**22**
End of life manual availability	End of Life Information
Take-back	**No**
WEEE Label	**The product must be disposed on European Union markets following specific waste collection and never end up in rubbish bins**

Dimensions Drawings

Dimensions

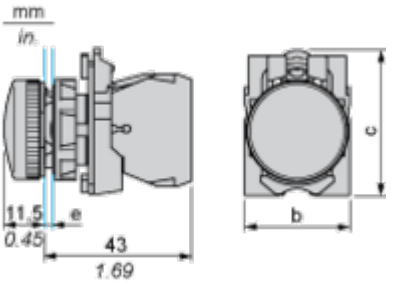

e: clamping thickness: 1 to 6 mm / 0.04 to 0.24 in.
b: 30 mm / 1.18 in.
c: 41.5 mm / 1.63 in.

Mounting and Clearance

Panel Cut-out for Pushbuttons, Switches and Pilot Lights (Finished Holes, Ready for Installation)

Connection by Screw Clamp Terminals or Plug-in Connectors or on Printed Circuit Board

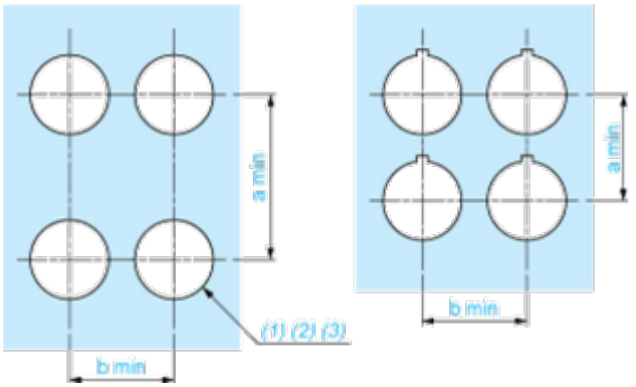

(1) Diameter on finished panel or support
(2) For selector switches and Emergency stop buttons, use of an anti-rotation plate type ZB5AZ902 is recommended.
(3) Ø22.5 mm recommended (Ø22.3 $_{0}^{+0.4}$) / Ø0.89 in. recommended (Ø0.88 in. $_{0}^{+0.016}$)

Connections	a in mm	a in in.	b in mm	b in in.
By screw clamp terminals or plug-in connector	40	1.57	30	1.18
By Faston connectors	45	1.77	32	1.26
On printed circuit board	30	1.18	30	1.18

Detail of Lug Recess

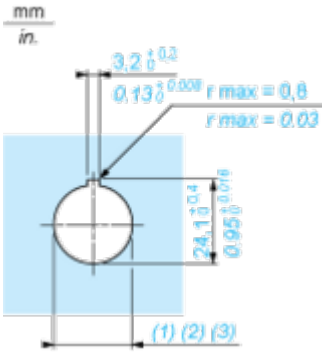

(1) Diameter on finished panel or support
(2) For selector switches and Emergency stop buttons, use of an anti-rotation plate type ZB5AZ902 is recommended.
(3) Ø22.5 mm recommended (Ø22.3 $_{0}^{+0.4}$) / Ø0.89 in. recommended (Ø0.88 in. $_{0}^{+0.016}$)