Product data sheet

Specifications



Pilot light, Harmony XB5, grey plastic, white flush mounted, 30mm, universal LED, plain lens, 24V AC DC

XB5FVB1

Important message: A change in appearance may be noted on the product but does not affect its use in terms of function and safety. This makes it compatible with our Universal LED blocks

Main

Range of product	Harmony XB5
Product or component type	Pilot light
Device short name	XB5F
Bezel material	Dark grey plastic
Fixing collar material	Plastic
Head type	Built-in-flush
Mounting diameter	30.5 mm
Sale per indivisible quantity	1
Shape of signaling unit head	Round
Cap/operator or lens colour	White
Operator additional information	With plain lens
Light source	Universal LED
Bulb base	Integral LED
Light source colour	White
[Us] rated supply voltage	24 V AC/DC at 50/60 Hz
Device presentation	Complete product

Complementary

Height	42 mm
Width	36.6 mm
Depth	55 mm
Terminals description ISO n°1	(X1-X2)PL
Net weight	0.038 kg
Resistance to high pressure washer	7000000 Pa at 55 °C, distance : 0.1 m
Connections - terminals	Screw clamp terminals, <= 2 x 1.5 mm² with cable end conforming to IEC 60947-1 Screw clamp terminals, 1 x 0.22...2 x 2.5 mm² without cable end conforming to IEC 60947-1
[Ui] rated insulation voltage	250 V (pollution degree 3) conforming to IEC 60947-1
[Uimp] rated impulse withstand voltage	4 kV conforming to IEC 60947-1
Signalling type	Steady

Disclaimer: This documentation is not intended as a substitute for and is not to be used for determining suitability or reliability of these products for specific user applications

GCR BRIDGE	XB5FVCUST01
Compatibility code	XB5
Supply voltage limits	19.2…30 V DC 21.6…26.4 V AC
Current consumption	18 mA
Service life	100000 h at rated voltage and 25 °C
Surge withstand	1 kV conforming to IEC 61000-4-5

Environment

Protective treatment	TH
Ambient air temperature for storage	-40…70 °C
Ambient air temperature for operation	-40…70 °C
Overvoltage category	Class II conforming to IEC 60536
IP degree of protection	IP66 conforming to IEC 60529 IP67 conforming to IEC 60529 IP69 conforming to IEC 60529 IP69K conforming to ISO 20653
Enclosure Type	UL type 4X/13
IK degree of protection	IK03 conforming to IEC 50102
Standards	JIS C8201-5-1 CSA C22.2 No 14 UL 508 IEC 60947-1 IEC 60947-5-4 IEC 60947-5-1 JIS C8201-1 ISO 21702 ISO 22196:2011
Product certifications	UL listed CSA
Vibration resistance	5 gn (f= 12…500 Hz) conforming to IEC 60068-2-6
Shock resistance	50 gn (duration = 18 ms) for half sine wave acceleration conforming to IEC 60068-2-27 30 gn (duration = 11 ms) for half sine wave acceleration conforming to IEC 60068-2-27
Resistance to fast transients	2 kV conforming to IEC 61000-4-4
Resistance to electromagnetic fields	10 V/m conforming to IEC 61000-4-3
Electromagnetic compatibility	Electrostatic discharge - test level: 6 kV (on contact (on metal parts)) conforming to IEC 61000-4-2 Electrostatic discharge - test level: 8 kV (in free air (in insulating parts)) conforming to IEC 61000-4-2 Electromagnetic emission class B conforming to IEC 55011
Resistance to electrostatic discharge	6 kV on contact (on metal parts) conforming to IEC 61000-4-2 8 kV in free air (in insulating parts) conforming to IEC 61000-4-2
Electromagnetic emission	Class B conforming to IEC 55011

Packing Units

Unit Type of Package 1	PCE
Number of Units in Package 1	1
Package 1 Height	4.3 cm
Package 1 Width	5.3 cm

Package 1 Length	8.6 cm
Package 1 Weight	42.0 g
Unit Type of Package 2	S02
Number of Units in Package 2	40
Package 2 Height	15.0 cm
Package 2 Width	30.0 cm
Package 2 Length	40.0 cm
Package 2 Weight	1.989 kg

Contractual warranty

Warranty (in months)	18

Environmental Data

Schneider Electric aims to achieve Net Zero status by 2050 through supply chain partnerships, lower impact materials, and circularity via our ongoing “Use Better, Use Longer, Use Again” campaign to extend product lifetimes and recyclability.

Environmental Data explained >

How we assess product sustainability >

Environmental footprint

Total lifecycle Carbon footprint	**19 kg CO2 eq.**
Carbon footprint of the manufacturing phase [A1 to A3]	**0.3 kg CO2 eq.**
Carbon footprint of the distribution phase [A4]	**0 kg CO2 eq.**
Carbon footprint of the installation phase [A5]	**0 kg CO2 eq.**
Carbon footprint of the use phase [B2, B3, B4, B6]	**18 kg CO2 eq.**
Carbon footprint of the end-of-life phase [C1 to C4]	**0.1 kg CO2 eq.**

Use Better

Materials and Substances

Average percentage of recycled plastic content	**21 %**
Average percentage of recycled metal content	**7 %**
Packaging made with recycled cardboard	**Yes**
Packaging without single use plastic	**Yes**
SCIP Number	**3d14fd98-3859-4733-a5ee-a3016769973c**
EU RoHS Directive	Compliant By Exemption
REACh Regulation	Reference contains Substances of Very High Concern above the threshold
California proposition 65	**WARNING: This product can expose you to chemicals including: Lead and lead compounds, which is known to the State of California to cause cancer and birth defects or other reproductive harm. For more information go to www.P65Warnings.ca.gov**

Use Longer

Lifetime extension

Product repair index	**A**

Use Again

Repack and remanufacture

Recyclability potential, in %	**22**
End of life manual availability	End of Life Information
Take-back	**No**
WEEE Label	**The product must be disposed on European Union markets following specific waste collection and never end up in rubbish bins**

Dimensions Drawings

Dimensions

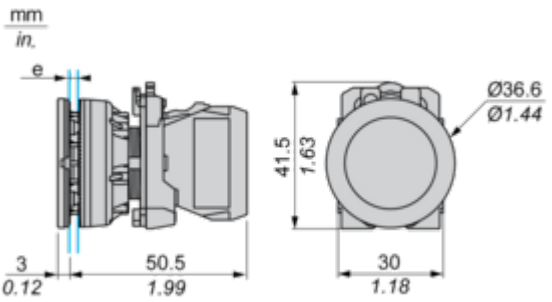

e: Clamping thickness: 1 to 6 mm / 0.04 to 0.24 in.

Mounting and Clearance

Panel Cut-out for Pushbuttons, Switches and Pilot Lights (Finished Holes, Ready for Installation)

Connection by Screw Clamp Terminals or Plug-in Connectors

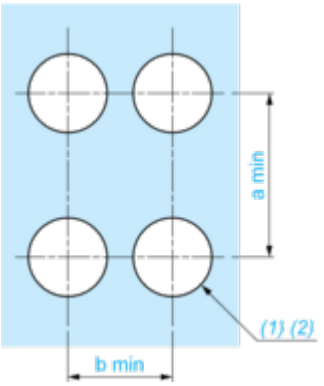

(1) Diameter on finished panel or support

(2) Ø30.75 mm recommended ($Ø30.5\ ^{+0.5}_{0}$) / Ø1.21 in. recommended ($Ø1.20\ in.\ ^{+0.0196}_{0}$)

Connections	a in mm	a in in.	b in mm	b in in.
By screw clamp terminals or plug-in connector	40	1.57	40	1.57
By Faston connectors	45	1.77	40	1.57

Technical Description

Electrical Composition Corresponding to Codes P1, P3, PF1, PR1 and PF2

Light block



Electrical Composition Corresponding to Code P4

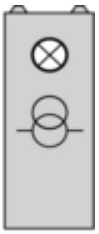

Legend

Single contact



Double contact



Light block



Possible location



Image of product / Alternate images

Alternative








X1
U N
X2



