Product data sheet

Specifications



Biometric switch bistable RGPD, Harmony XB5S, plastic, 22mm, USB, connection by M12 connector, 24V AC DC

XB5S8B2M12

Discontinued

Discontinued on: Oct 29, 2025

Main

Product or component type	Biometric switch RGPD
Product specific application	Industrial machines Materials handling
Device short name	XB5S
Bezel material	Plastic
Mounting diameter	22 mm
Output type	PNP
Sale per indivisible quantity	1
IP degree of protection	IP20 (rear face) conforming to IEC 60529 IP65 (front face) conforming to IEC 60529
Type of operator	Stay put
Operator position information	2 positions
Operator profile	fingerprint reader
Memory usage	200 users with up to 2 fingerprints per user

Complementary

Software designation	XB5SSoft
Enclosure material	Polyamide PA66
Cable insulation material	PvR
Operating position	Flat surface installation Horizontal position Vertical surface installation
Function of module	Bi-stable
Net weight	0.215 kg
Marking	CE
port protocol	USB
Connector type	USB type A male with 1 m cable
Local signalling	1 LED (green) for output state indicator 1 LED (red) for error
Short-circuit protection	250 mA external fuse type gG
[Us] rated supply voltage	24 V DC
Electrical connection	M12 connector of 0.2 m

Disclaimer: This documentation is not intended as a substitute for and is not to be used for determining suitability or reliability of these products for specific user applications

Supply voltage limits	20…30 V DC
Protection type	Short-circuit Overload protection Reverse polarity
Maximum switching current	200 mA
[Ures] residual voltage	1 V closed state
Current consumption	<= 70 mA no-load
Maximum delay first up	3 s + 0.5 ms per user registered
Maximum delay recovery	1.5 s
Maximum delay response	1.5 s

Environment

Range of product	Harmony XB5S
Ambient air temperature for storage	-25…70 °C
Ambient air temperature for operation	-5…50 °C
NEMA degree of protection	NEMA 12
Standards	IEC 61000-6-2 IEC 61000-6-4
Product certifications	CSA UL
Vibration resistance	+/- 3 mm (f= 5…9 Hz) conforming to IEC 60068-2-6 1 gn (f= 9…500 Hz) conforming to IEC 60068-2-6
Shock resistance	50 gn 11 ms conforming to IEC 60068-2-27

Packing Units

Unit Type of Package 1	PCE
Number of Units in Package 1	1
Package 1 Height	6.600 cm
Package 1 Width	9.500 cm
Package 1 Length	18.400 cm
Package 1 Weight	194.000 g

Contractual warranty

Warranty (in months)	18

Environmental Data

Schneider Electric aims to achieve Net Zero status by 2050 through supply chain partnerships, lower impact materials, and circularity via our ongoing “Use Better, Use Longer, Use Again” campaign to extend product lifetimes and recyclability.

Environmental Data explained >

How we assess product sustainability >

Environmental footprint

Total lifecycle Carbon footprint	**173 kg CO2 eq.**
Carbon footprint of the manufacturing phase [A1 to A3]	**5 kg CO2 eq.**
Carbon footprint of the distribution phase [A4]	**0 kg CO2 eq.**
Carbon footprint of the installation phase [A5]	**0.1 kg CO2 eq.**
Carbon footprint of the use phase [B2, B3, B4, B6]	**168 kg CO2 eq.**
Carbon footprint of the end-of-life phase [C1 to C4]	**0.2 kg CO2 eq.**
Environmental Disclosure	**Product Environmental Profile**

Use Better

Materials and Substances

Packaging made with recycled cardboard	**Yes**
Packaging without single use plastic	**Yes**
EU RoHS Directive	**Compliant By Exemption**
REACh Regulation	**Reference contains Substances of Very High Concern above the threshold**

Use Longer

Lifetime extension

Product repair index	**A**

Use Again

Repack and remanufacture

End of life manual availability	**End of Life Information**
Take-back	**No**
WEEE Label	**The product must be disposed on European Union markets following specific waste collection and never end up in rubbish bins**

Dimensions Drawings

Dimensions of Biometric Switches

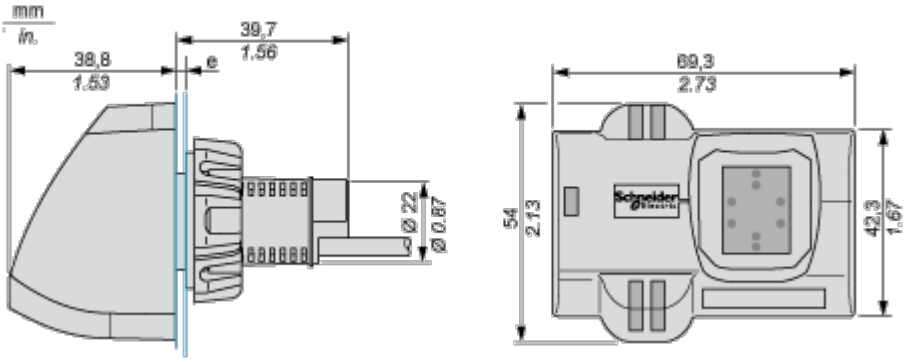

e: 1 to 6 mm / 0.04 to 0.24 in.

Connections and Schema

M12 Connector

M12 connector

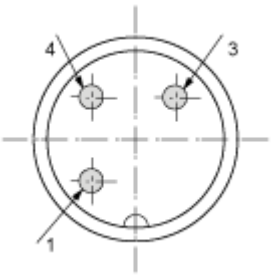

1 : (+)

3 : (-)

4 : Output

Image of product / Alternate images

Alternative






RGPD


RGPD

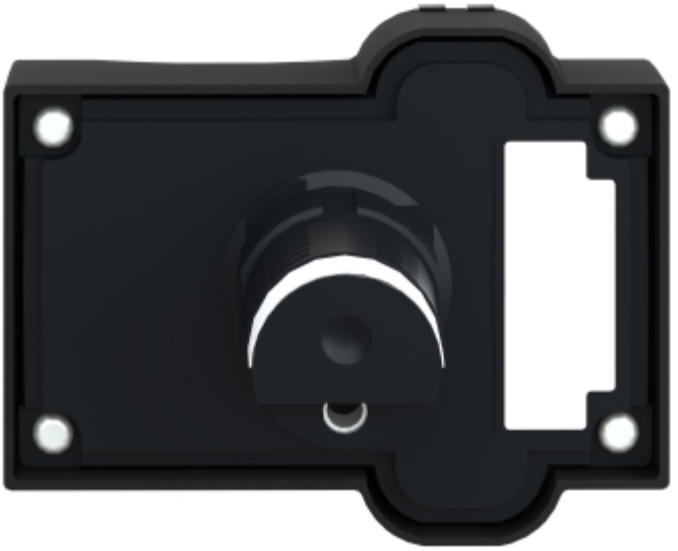



Image of product in real life situation

