# Product data sheet

Specifications



## Head for illuminated push button, Harmony XB4, blue flush, 22mm, universal LED, spring return, plain, unmarked

ZB4BW3637

**Important message: A change in appearance may be noted on the product but does not affect its use in terms of function and safety. This makes it compatible with our Universal LED blocks**

## Main

| | |
|---|---|
| **Range of product** | Harmony XB4 |
| **Product or component type** | Head for illuminated push-button |
| **Device short name** | ZB4 |
| **Product compatibility** | Integral LED |
| **Bezel material** | Black metal |
| **Head type** | Standard |
| **Mounting diameter** | 22.5 mm |
| **Sale per indivisible quantity** | 1 |
| **Shape of signaling unit head** | Round |
| **Type of operator** | spring return |
| **Operator profile** | Blue flush, unmarked |
| **Operator additional information** | With plain lens |
| **Cap/operator or lens colour** | Blue |

## Complementary

| | |
|---|---|
| **CAD overall width** | 29 mm |
| **CAD overall height** | 29 mm |
| **CAD overall depth** | 30 mm |
| **Net weight** | 0.026 kg |
| **Resistance to high pressure washer** | 7000000 Pa at 55 °C, distance : 0.1 m |
| **Mechanical durability** | 10000000 cycles |
| **Electrical composition code** | M1 for <6 contacts using single blocks in front mounting with integral LED<br>M2 for <6 contacts using single and double blocks in front mounting with integral LED<br>M6 for <2 contacts using single blocks in front mounting with integral LED and transformer<br>M10 for <2 contacts using single blocks in front mounting with integral LED |
| **Device presentation** | Basic sub-assemblies |

## Environment

| | |
|---|---|
| **Protective treatment** | TH |
| **Ambient air temperature for storage** | -40…70 °C |
| **Ambient air temperature for operation** | -40…70 °C |

Disclaimer: This documentation is not intended as a substitute for and is not to be used for determining suitability or reliability of these products for specific user applications

| | |
|---|---|
| **Overvoltage category** | Class I conforming to IEC 60536 |
| **IP degree of protection** | IP66 conforming to IEC 60529<br>IP67<br>IP69<br>IP69K |
| **Enclosure Type** | UL type 4X/13 |
| **IK degree of protection** | IK06 conforming to IEC 62262 |
| **Standards** | IEC 60947-5-1<br>CSA C22.2 No 14<br>IEC 60947-5-4<br>IEC 60947-1<br>IEC 60947-5-5<br>UL 508<br>JIS C8201-5-1<br>JIS C8201-1 |
| **Product certifications** | CSA<br>LROS (Lloyds register of shipping)<br>BV<br>UL listed<br>DNV |
| **Vibration resistance** | 5 gn (f= 2…500 Hz) conforming to IEC 60068-2-6 |
| **Shock resistance** | 30 gn (duration = 18 ms) for half sine wave acceleration conforming to IEC 60068-2-27<br>50 gn (duration = 11 ms) for half sine wave acceleration conforming to IEC 60068-2-27 |

## Packing Units

| | |
|---|---|
| **Unit Type of Package 1** | PCE |
| **Number of Units in Package 1** | 1 |
| **Package 1 Height** | 4.500 cm |
| **Package 1 Width** | 3.500 cm |
| **Package 1 Length** | 5.500 cm |
| **Package 1 Weight** | 26.000 g |
| **Unit Type of Package 2** | S02 |
| **Number of Units in Package 2** | 100 |
| **Package 2 Height** | 15.000 cm |
| **Package 2 Width** | 30.000 cm |
| **Package 2 Length** | 40.000 cm |
| **Package 2 Weight** | 2.906 kg |

## Contractual warranty

| | |
|---|---|
| **Warranty (in months)** | 18 |

## Environmental Data

Schneider Electric aims to achieve Net Zero status by 2050 through supply chain partnerships, lower impact materials, and circularity via our ongoing “Use Better, Use Longer, Use Again” campaign to extend product lifetimes and recyclability.

Environmental Data explained >

How we assess product sustainability >

### Environmental footprint

| | |
|---|---|
| Total lifecycle Carbon footprint | **0.2 kg CO2 eq.** |
| Carbon footprint of the manufacturing phase [A1 to A3] | **0.2 kg CO2 eq.** |
| Carbon footprint of the distribution phase [A4] | **0 kg CO2 eq.** |
| Carbon footprint of the installation phase [A5] | **0 kg CO2 eq.** |
| Carbon footprint of the use phase [B2, B3, B4, B6] | **0 kg CO2 eq.** |
| Carbon footprint of the end-of-life phase [C1 to C4] | **0 kg CO2 eq.** |

## Use Better

### Materials and Substances

| | |
|---|---|
| Average percentage of recycled plastic content | **37 %** |
| Average percentage of recycled metal content | **21 %** |
| Packaging made with recycled cardboard | **Yes** |
| Packaging without single use plastic | **Yes** |
| EU RoHS Directive | **Compliant** |
| REACh Regulation | **Reference contains Substances of Very High Concern above the threshold** |

## Use Again

### Repack and remanufacture

| | |
|---|---|
| End of life manual availability | **End of Life Information** |
| Take-back | **No** |

Dimensions Drawings

**Dimensions**

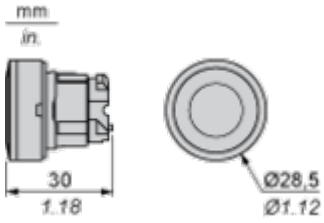

Mounting and Clearance

**Panel Cut-out for Pushbuttons, Switches and Pilot Lights (Finished Holes, Ready for Installation)**

| Connection by Screw Clamp Terminals or Plug-in Connectors or on Printed Circuit Board | Connection by Faston Connectors |
|---|---|
| 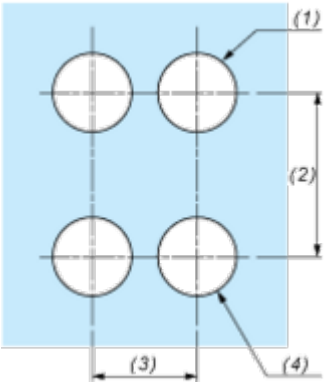 | 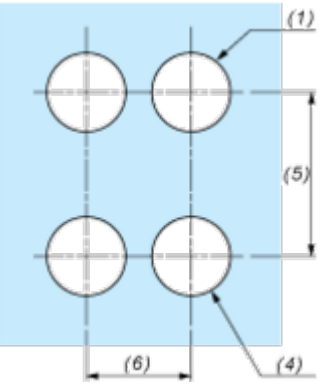 |

**(1)** Diameter on finished panel or support
**(2)** 40 mm min. / 1.57 in. min.
**(3)** 30 mm min. / 1.18 in. min.
**(4)** Ø 22.5 mm / 0.89 in. recommended (Ø 22.3 mm $_{0}^{+0.4}$ / 0.88 in. $_{0}^{+0.016}$)
**(5)** 45 mm min. / 1.78 in. min.
**(6)** 32 mm min. / 1.26 in. min.

## Pushbuttons, Switches and Pilot Lights for Printed Circuit Board Connection

### Panel Cut-outs (Viewed from Installer's Side)

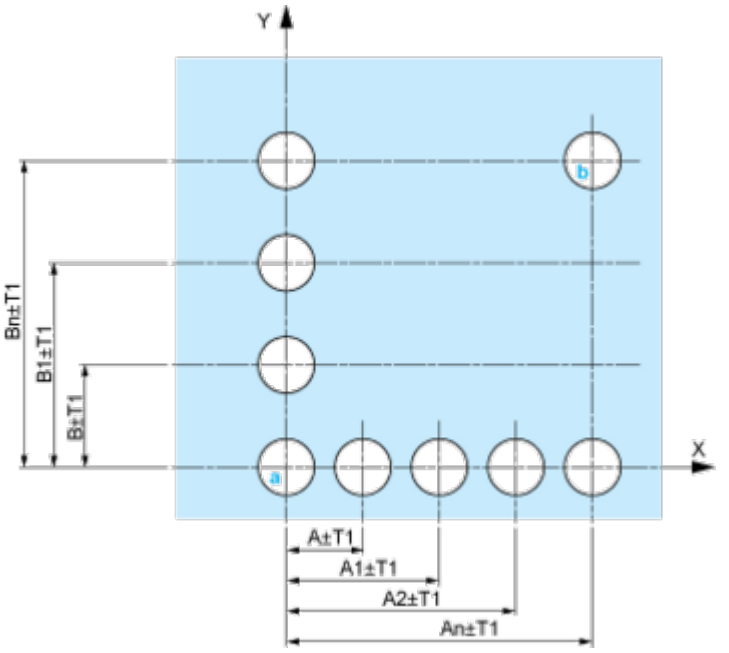


**A:** 30 mm min. / 1.18 in. min.
**B:** 40 mm min. / 1.57 in. min.

### Printed Circuit Board Cut-outs (Viewed from Electrical Block Side)

Dimensions in mm

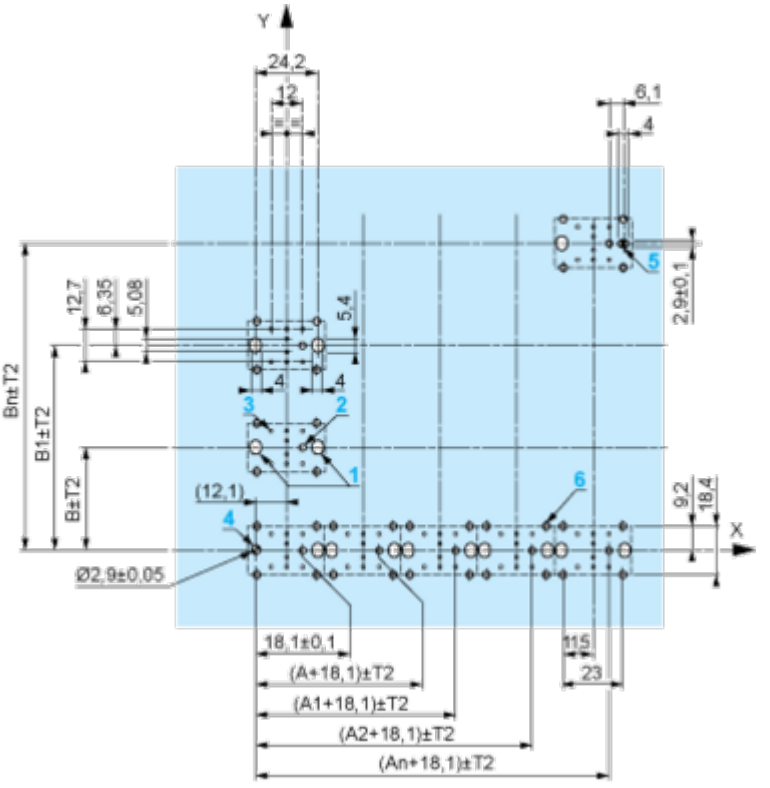


**A:** 30 mm min.
**B:** 40 mm min.
Dimensions in in.

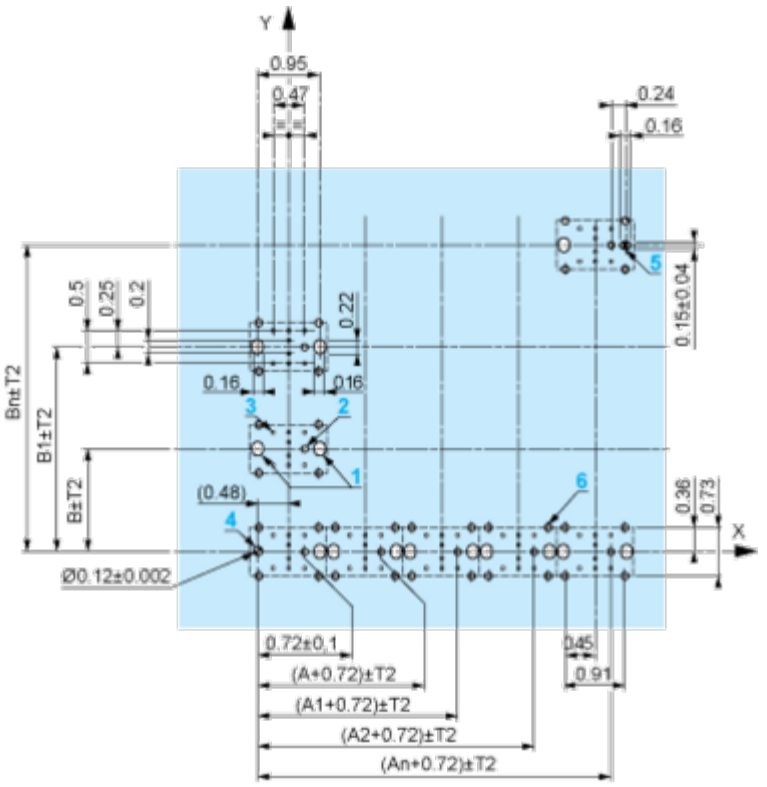


**A:** 1.18 in. min.
**B:** 1.57 in. min.

### General Tolerances of the Panel and Printed Circuit Board

The cumulative tolerance must not exceed 0.3 mm / 0.012 in: T1 + T2 = 0.3 mm max.

### Installation Precautions

- Minimum thickness of circuit board: 1.6 mm / 0.06 in.
- Cut-out diameter: 22.4 mm ± 0.1 / 0.88 in. ± 0.004
- Orientation of body/fixing collar ZB4 BZ009: ± 2°30' (excluding cut-outs marked **a** and **b**).
- Tightening torque of screws ZBZ 006: 0.6 N.m (5.3 lbf.in) max.
- Allow for one ZB4 BZ079 fixing collar/pillar and its fixing screws:
  - every 90 mm / 3.54 in. horizontally (X), and 120 mm / 4.72 in. vertically (Y).
  - with each selector switch head (ZB4 BD•, ZB4 BJ•, ZB4 BG•).

The fixing centers marked **a** and **b** are diagonally opposed and must align with those marked **4** and **5**.

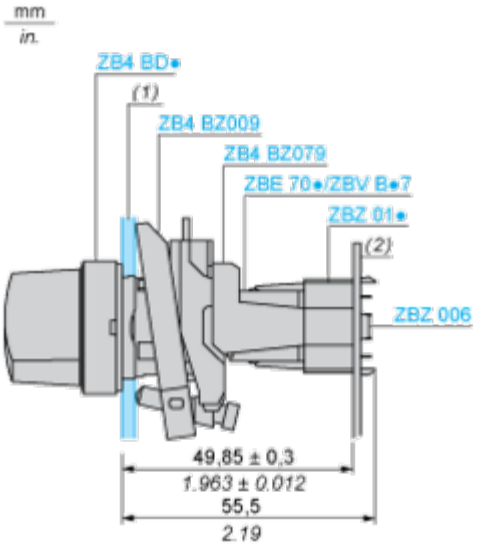


**(1)** Panel
**(2)** Printed circuit board

### Mounting of Adapter (Socket) ZBZ 01•

- **1** 2 elongated holes for ZBZ 006 screw access
- **2** 1 hole Ø 2.4 mm ± 0.05 / 0.09 in. ± 0.002 for centring adapter ZBZ 01•
- **3** 8 × Ø 1.2 mm / 0.05 in. holes
- **4** 1 hole Ø 2.9 mm ± 0.05 / 0.11 in. ± 0.002, for aligning the printed circuit board (with cut-out marked **a**)
- **5** 1 elongated hole for aligning the printed circuit board (with cut-out marked **b**)
- **6** 4 holes Ø 2.4 mm / 0.09 in. for clipping in adapter ZBZ 01•

Dimensions An + 18.1 relate to the Ø 2.4 mm ± 0.05 / 0.09 in. ± 0.002 holes for centring adapter ZBZ 01•.

Technical Description

**Electrical Composition Corresponding to Codes M1 and M7**

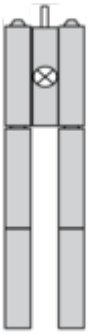

## Electrical Composition Corresponding to Codes M2 and M8

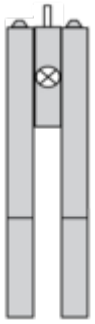

## Electrical Composition Corresponding to Codes M6 and P2

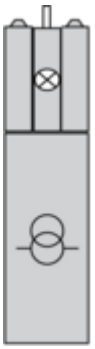

## Electrical Composition Corresponding to Codes M5, M10, MF1, MR1 and MF2

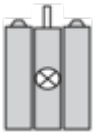

## Legend

Single contact



Double contact



Light block



Possible location



Image of product / Alternate images

**Alternative**

