Product data sheet

Specifications



Head for illuminated double headed push button, Harmony XB5, 2 white black flush, 22mm, 1 central pilot light, marked up down arrow

ZB5AW7A1724

Main

Range of product	Harmony XB5
Product or component type	Head for illuminated double-headed push-button
Product compatibility	Integral LED
Device short name	ZB5
Bezel material	Dark grey plastic
Head type	Standard
Mounting diameter	22 mm
Sale per indivisible quantity	1
Shape of signaling unit head	Rectangular
Type of operator	spring return
Operator profile	2 flush push-buttons - 1 central pilot light
Operators description	White "up arrow" - black "down arrow"

Complementary

CAD overall width	30 mm
CAD overall height	50 mm
CAD overall depth	30 mm
Net weight	0.023 kg
Colour of marking	Black marking when white caps
Operator profile	White flush, up arrow (black) Black flush, down arrow (white)
Mechanical durability	1000000 cycles
Station name	XALD 1 cut-out
Device presentation	Basic sub-assemblies

Environment

Ambient air temperature for storage	-40…70 °C
Ambient air temperature for operation	-25…70 °C
Electrical shock protection class	Class II conforming to IEC 60536
IP degree of protection	IP66 IP67 IP69 IP69K
Enclosure Type	UL type 4X/13

Disclaimer: This documentation is not intended as a substitute for and is not to be used for determining suitability or reliability of these products for specific user applications

Resistance to high pressure washer	7000000 Pa at 55 °C, distance : 0.1 m
IK degree of protection	IK05 conforming to IEC 50102
Standards	IEC 60947-1 UL 508 JIS C8201-5-1 IEC 60947-5-4 CSA C22.2 No 14 IEC 60947-5-1 JIS C8201-1
Product certifications	CSA DNV BV LROS (Lloyds register of shipping) UL listed
Vibration resistance	5 gn (f= 2…500 Hz) conforming to IEC 60068-2-6
Shock resistance	30 gn (duration = 18 ms) for half sine wave acceleration conforming to IEC 60068-2-27 50 gn (duration = 11 ms) for half sine wave acceleration conforming to IEC 60068-2-27

Packing Units

Unit Type of Package 1	PCE
Number of Units in Package 1	1
Package 1 Height	3.500 cm
Package 1 Width	4.500 cm
Package 1 Length	5.000 cm
Package 1 Weight	25.000 g
Unit Type of Package 2	S01
Number of Units in Package 2	50
Package 2 Height	15.000 cm
Package 2 Width	15.000 cm
Package 2 Length	40.000 cm
Package 2 Weight	1.399 kg
Unit Type of Package 3	P06
Number of Units in Package 3	1600
Package 3 Height	75.000 cm
Package 3 Width	80.000 cm
Package 3 Length	60.000 cm
Package 3 Weight	52.768 kg

Contractual warranty

Warranty (in months)	18

Environmental Data

Schneider Electric aims to achieve Net Zero status by 2050 through supply chain partnerships, lower impact materials, and circularity via our ongoing “Use Better, Use Longer, Use Again” campaign to extend product lifetimes and recyclability.

Environmental Data explained >

How we assess product sustainability >

Environmental footprint

Total lifecycle Carbon footprint	**0.2 kg CO2 eq.**
Carbon footprint of the manufacturing phase [A1 to A3]	**0.2 kg CO2 eq.**
Carbon footprint of the distribution phase [A4]	**0 kg CO2 eq.**
Carbon footprint of the installation phase [A5]	**0 kg CO2 eq.**
Carbon footprint of the use phase [B2, B3, B4, B6]	**0 kg CO2 eq.**
Carbon footprint of the end-of-life phase [C1 to C4]	**0.1 kg CO2 eq.**
Environmental Disclosure	**Product Environmental Profile**

Use Better

Materials and Substances

Average percentage of recycled plastic content	**16 %**
Average percentage of recycled metal content	**29 %**
Packaging made with recycled cardboard	**Yes**
Packaging without single use plastic	**Yes**
EU RoHS Directive	**Compliant**
REACh Regulation	**Free of Substances of Very High Concern above the threshold**

Use Again

Repack and remanufacture

Recyclability potential, in %	**38**
End of life manual availability	**End of Life Information**
Take-back	**No**

Dimensions Drawings

Dimensions

Without Boot

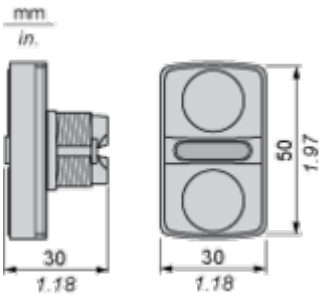

With Boot ZBA708

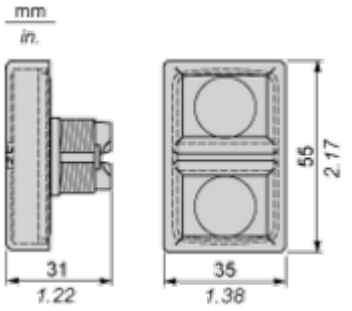

Technical Description

Electrical Composition Corresponding to Codes M1 and M7

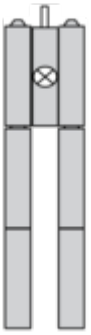

Electrical Composition Corresponding to Codes M2 and M8

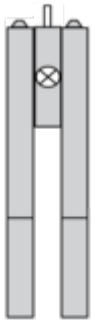

Electrical Composition Corresponding to Codes M6 and P2

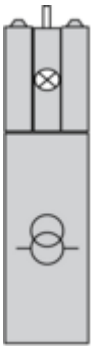

Electrical Composition Corresponding to Codes M5, M10, MF1, MR1 and MF2

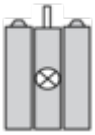

Legend

Single contact



Double contact



Light block



Possible location

