# Product data sheet

Specifications



## Head for illuminated double headed push button, Harmony XB5, 1 green flush/ 1 red projecting, 22mm, unmarked

ZB5AW7L3740

## Main

| | |
|---|---|
| **Range of product** | Harmony XB5 |
| **Product or component type** | Head for illuminated double-headed push-button |
| **Product compatibility** | Integral LED |
| **Device short name** | ZB5 |
| **Bezel material** | Dark grey plastic |
| **Head type** | Standard |
| **Mounting diameter** | 22 mm |
| **Sale per indivisible quantity** | 1 |
| **Shape of signaling unit head** | Rectangular |
| **Type of operator** | spring return |
| **Operator profile** | 1 flush - 1 projecting push-buttons - 1 central pilot light |
| **Operators description** | Green unmarked - red unmarked |

## Complementary

| | |
|---|---|
| **CAD overall width** | 30 mm |
| **CAD overall height** | 50 mm |
| **CAD overall depth** | 35 mm |
| **Net weight** | 0.023 kg |
| **Operator profile** | Green flush, unmarked<br>Red projecting, unmarked |
| **Mechanical durability** | 1000000 cycles |
| **Station name** | XALD 1 cut-out |
| **Device presentation** | Basic sub-assemblies |

## Environment

| | |
|---|---|
| **Ambient air temperature for storage** | -40…70 °C |
| **Ambient air temperature for operation** | -25…70 °C |
| **Electrical shock protection class** | Class II conforming to IEC 60536 |
| **IP degree of protection** | IP66<br>IP69<br>IP69K |
| **Enclosure Type** | UL type 4X/13 |
| **Resistance to high pressure washer** | 7000000 Pa at 55 °C, distance : 0.1 m |

Disclaimer: This documentation is not intended as a substitute for and is not to be used for determining suitability or reliability of these products for specific user applications

| | |
|---|---|
| **IK degree of protection** | IK05 conforming to IEC 50102 |
| **Standards** | IEC 60947-5-4<br>UL 508<br>CSA C22.2 No 14<br>IEC 60947-5-1<br>JIS C8201-5-1<br>IEC 60947-1<br>JIS C8201-1 |
| **Product certifications** | CSA<br>DNV<br>BV<br>LROS (Lloyds register of shipping)<br>UL listed |
| **Vibration resistance** | 5 gn (f= 2…500 Hz) conforming to IEC 60068-2-6 |
| **Shock resistance** | 30 gn (duration = 18 ms) for half sine wave acceleration conforming to IEC 60068-2-27<br>50 gn (duration = 11 ms) for half sine wave acceleration conforming to IEC 60068-2-27 |

## Packing Units

| | |
|---|---|
| **Unit Type of Package 1** | PCE |
| **Number of Units in Package 1** | 1 |
| **Package 1 Height** | 3.500 cm |
| **Package 1 Width** | 4.600 cm |
| **Package 1 Length** | 5.300 cm |
| **Package 1 Weight** | 24.000 g |
| **Unit Type of Package 2** | S03 |
| **Number of Units in Package 2** | 200 |
| **Package 2 Height** | 30.000 cm |
| **Package 2 Width** | 30.000 cm |
| **Package 2 Length** | 40.000 cm |
| **Package 2 Weight** | 5.833 kg |

## Contractual warranty

| | |
|---|---|
| **Warranty (in months)** | 18 |

## Environmental Data

Schneider Electric aims to achieve Net Zero status by 2050 through supply chain partnerships, lower impact materials, and circularity via our ongoing “Use Better, Use Longer, Use Again” campaign to extend product lifetimes and recyclability.

Environmental Data explained >

How we assess product sustainability >

### Environmental footprint

| | |
|---|---|
| Total lifecycle Carbon footprint | **0.2 kg CO2 eq.** |
| Carbon footprint of the manufacturing phase [A1 to A3] | **0.2 kg CO2 eq.** |
| Carbon footprint of the distribution phase [A4] | **0 kg CO2 eq.** |
| Carbon footprint of the installation phase [A5] | **0 kg CO2 eq.** |
| Carbon footprint of the use phase [B2, B3, B4, B6] | **0 kg CO2 eq.** |
| Carbon footprint of the end-of-life phase [C1 to C4] | **0.1 kg CO2 eq.** |

## Use Better

### Materials and Substances

| | |
|---|---|
| Average percentage of recycled plastic content | **16 %** |
| Average percentage of recycled metal content | **29 %** |
| Packaging made with recycled cardboard | **Yes** |
| Packaging without single use plastic | **Yes** |
| EU RoHS Directive | **Compliant** |
| REACh Regulation | **Free of Substances of Very High Concern above the threshold** |

## Use Again

### Repack and remanufacture

| | |
|---|---|
| End of life manual availability | **End of Life Information** |
| Take-back | **No** |

Dimensions Drawings

## Dimensions

### Without Boot

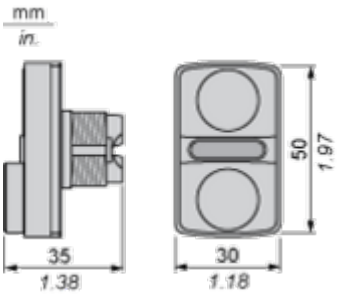


### With Boot ZBA710

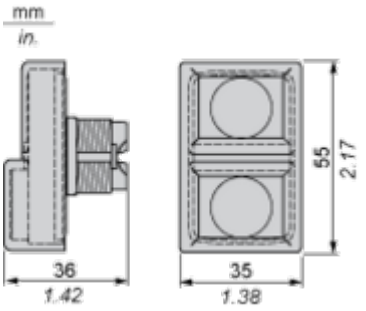

Technical Description

**Electrical Composition Corresponding to Codes M1 and M7**

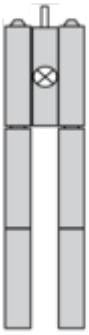

## Electrical Composition Corresponding to Codes M2 and M8

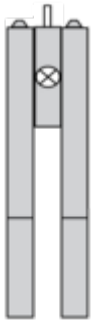

## Electrical Composition Corresponding to Codes M6 and P2

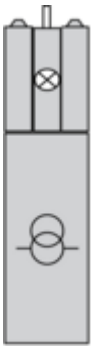

## Electrical Composition Corresponding to Codes M5, M10, MF1, MR1 and MF2

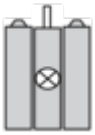

## Legend

Single contact



Double contact



Light block



Possible location

