# Product data sheet

Specifications



## Head for non illuminated push button, Harmony XB5, XB4, green flush pushbutton Ø22 mm spring return unmarked

ZB5AP38

**Important message: A change in appearance may be noted on the product but does not affect its use in terms of function and safety. This makes it compatible with our Universal LED blocks**

## Main

| | |
|---|---|
| **Range of product** | Harmony XB5 |
| **Product or component type** | Head for non-illuminated push-button |
| **Device short name** | ZB5 |
| **Product compatibility** | Not compatible with legend holder |
| **Bezel material** | Dark grey plastic |
| **Mounting diameter** | 22 mm |
| **Head type** | Standard |
| **Sale per indivisible quantity** | 1 |
| **Shape of signaling unit head** | Round |
| **Type of operator** | spring return |
| **Operator profile** | Green flush, unmarked |
| **Operator additional information** | Clear boot for insertion of protected legend within head |

## Complementary

| | |
|---|---|
| **CAD overall width** | 30 mm |
| **CAD overall height** | 30 mm |
| **CAD overall depth** | 37 mm |
| **Net weight** | 0.023 kg |
| **Mechanical durability** | 10000000 cycles |
| **Station name** | XALD 1...5 cut-outs<br>XALK 2...5 cut-outs |
| **Electrical composition code** | C3 for <6 contacts using single blocks in front mounting<br>C4 for <6 contacts using single and double blocks in front mounting<br>C14 for <2 contacts using single blocks in front mounting<br>SF2 for <2 contacts using single blocks in front mounting<br>SR2 for <2 contacts using single blocks in rear mounting |
| **Device presentation** | Basic element |

## Environment

| | |
|---|---|
| **Protective treatment** | TH |
| **Ambient air temperature for storage** | -40…70 °C |
| **Ambient air temperature for operation** | -40…70 °C |

Disclaimer: This documentation is not intended as a substitute for and is not to be used for determining suitability or reliability of these products for specific user applications

| | |
|---|---|
| **Overvoltage category** | Class II conforming to IEC 60536 |
| **IP degree of protection** | IP66 conforming to IEC 60529<br>IP67 conforming to IEC 60529<br>IP69 conforming to IEC 60529<br>IP69K conforming to ISO 20653 |
| **Enclosure Type** | UL type 4X/13 |
| **Resistance to high pressure washer** | 7000000 Pa at 55 °C, distance : 0.1 m |
| **IK degree of protection** | IK03 conforming to IEC 50102 |
| **Standards** | UL 508<br>IEC 60947-5-4<br>IEC 60947-1<br>JIS C8201-5-1<br>CSA C22.2 No 14<br>IEC 60947-5-1<br>JIS C8201-1 |
| **Product certifications** | CSA<br>DNV<br>BV<br>LROS (Lloyds register of shipping)<br>UL listed |
| **Shock resistance** | 30 gn (duration = 18 ms) for half sine wave acceleration conforming to IEC 60068-2-27<br>50 gn (duration = 11 ms) for half sine wave acceleration conforming to IEC 60068-2-27 |
| **Vibration resistance** | 5 gn (f= 2…500 Hz) conforming to IEC 60068-2-6 |

## Packing Units

| | |
|---|---|
| **Unit Type of Package 1** | PCE |
| **Number of Units in Package 1** | 1 |
| **Package 1 Height** | 3.400 cm |
| **Package 1 Width** | 5.300 cm |
| **Package 1 Length** | 9.000 cm |
| **Package 1 Weight** | 22.000 g |
| **Unit Type of Package 2** | S01 |
| **Number of Units in Package 2** | 25 |
| **Package 2 Height** | 15.000 cm |
| **Package 2 Width** | 15.000 cm |
| **Package 2 Length** | 40.000 cm |
| **Package 2 Weight** | 800.000 g |

## Contractual warranty

| | |
|---|---|
| **Warranty (in months)** | 18 |

## Environmental Data

Schneider Electric aims to achieve Net Zero status by 2050 through supply chain partnerships, lower impact materials, and circularity via our ongoing “Use Better, Use Longer, Use Again” campaign to extend product lifetimes and recyclability.

Environmental Data explained >

How we assess product sustainability >

### Environmental footprint

| | |
|---|---|
| Total lifecycle Carbon footprint | **0.1 kg CO2 eq.** |
| Carbon footprint of the manufacturing phase [A1 to A3] | **0.1 kg CO2 eq.** |
| Carbon footprint of the distribution phase [A4] | **0 kg CO2 eq.** |
| Carbon footprint of the installation phase [A5] | **0 kg CO2 eq.** |
| Carbon footprint of the use phase [B2, B3, B4, B6] | **0 kg CO2 eq.** |
| Carbon footprint of the end-of-life phase [C1 to C4] | **0 kg CO2 eq.** |

## Use Better

### Materials and Substances

| | |
|---|---|
| Average percentage of recycled plastic content | **6 %** |
| Average percentage of recycled metal content | **29 %** |
| Packaging made with recycled cardboard | **Yes** |
| Packaging without single use plastic | **No** |
| EU RoHS Directive | **Compliant By Exemption** |
| REACh Regulation | **Reference contains Substances of Very High Concern above the threshold** |
| California proposition 65 | **WARNING: This product can expose you to chemicals including: Di-isodecyl phthalate (DIDP), which is known to the State of California to cause birth defects or other reproductive harm. For more information go to www.P65Warnings.ca.gov** |

## Use Again

### Repack and remanufacture

| | |
|---|---|
| Recyclability potential, in % | **0** |
| End of life manual availability | **End of Life Information** |
| Take-back | **No** |

Dimensions Drawings

## Dimensions

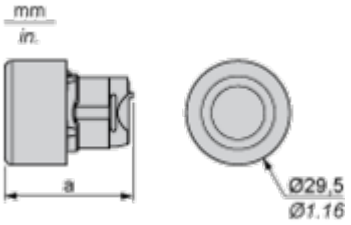


| | a in mm | a in in. |
|---|---|---|
| **ZB5AP••** | 36.5 | 1.44 |
| **ZB5AP•S** | 33 | 1.30 |
| **ZB5AP•83** | 32 | 1.26 |
| **ZB5AP•** | 35 | 1.38 |

## Mounting and Clearance

### Panel Cut-out for Pushbuttons, Switches and Pilot Lights (Finished Holes, Ready for Installation)

### Connection by Screw Clamp Terminals or Plug-in Connectors or on Printed Circuit Board

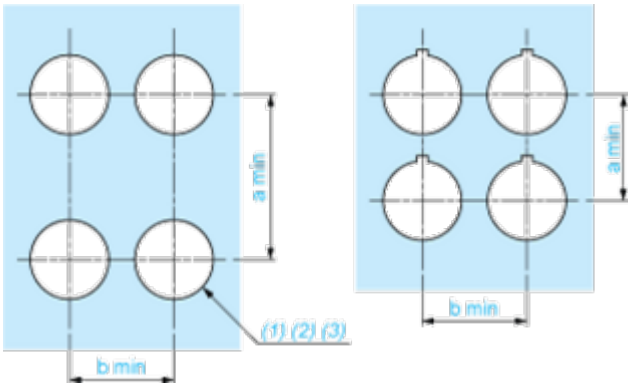


**(1)** Diameter on finished panel or support
**(2)** For selector switches and Emergency stop buttons, use of an anti-rotation plate type ZB5AZ902 is recommended.
**(3)** Ø22.5 mm recommended (Ø22.3 $_{0}^{+0.4}$) / Ø0.89 in. recommended (Ø0.88 in. $_{0}^{+0.016}$)

| Connections | a in mm | a in in. | b in mm | b in in. |
|---|---|---|---|---|
| By screw clamp terminals or plug-in connector | 40 | 1.57 | 30 | 1.18 |
| By Faston connectors | 45 | 1.77 | 32 | 1.26 |
| On printed circuit board | 30 | 1.18 | 30 | 1.18 |

### Detail of Lug Recess

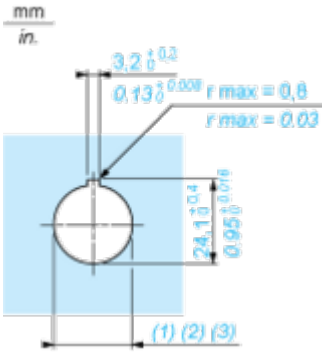


**(1)** Diameter on finished panel or support
**(2)** For selector switches and Emergency stop buttons, use of an anti-rotation plate type ZB5AZ902 is recommended.
**(3)** Ø22.5 mm recommended (Ø22.3 $_{0}^{+0.4}$) / Ø0.89 in. recommended (Ø0.88 in. $_{0}^{+0.016}$)

## Pushbuttons, Switches and Pilot Lights for Printed Circuit Board Connection

### Panel Cut-outs (Viewed from Installer's Side)

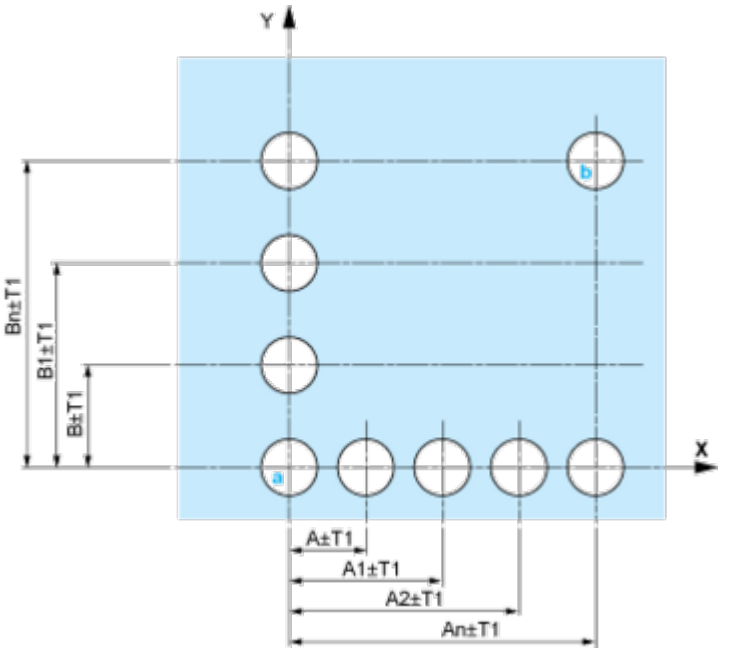


**A:** 30 mm min. / 1.18 in. min.
**B:** 40 mm min. / 1.57 in. min.

### Printed Circuit Board Cut-outs (Viewed from Electrical Block Side)

Dimensions in mm

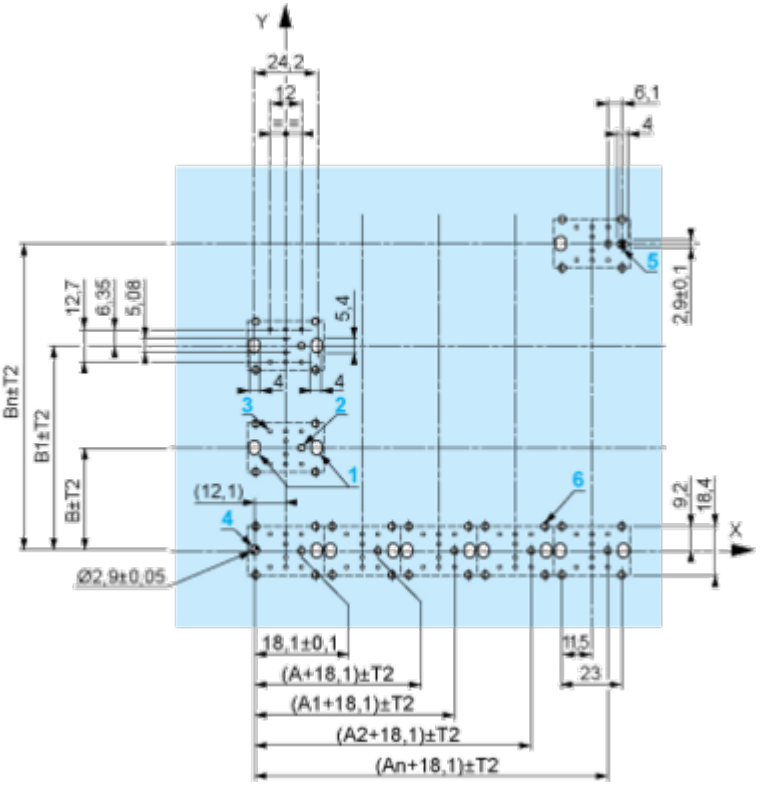


**A:** 30 mm min.
**B:** 40 mm min.
Dimensions in in.

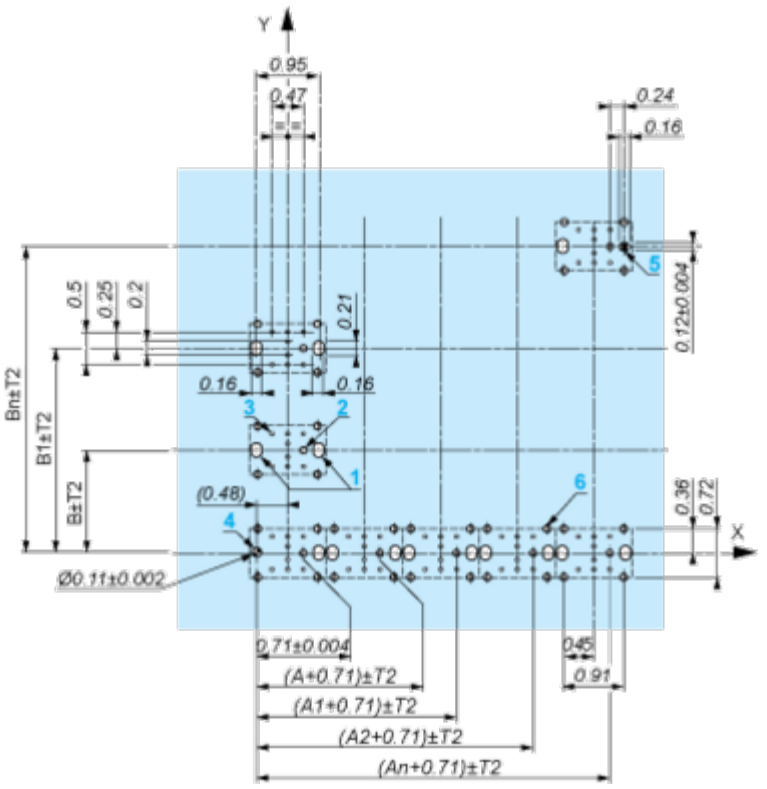


**A:** 1.18 in. min.
**B:** 1.57 in. min.

### General Tolerances of the Panel and Printed Circuit Board

The cumulative tolerance must not exceed 0.3 mm / 0.012 in.: T1 + T2 = 0.3 mm max.

### Installation Precautions

- Minimum thickness of circuit board: 1.6 mm / 0.06 in.
- Cut-out diameter: 22.4 mm ± 0.1 / 0.88 in. ± 0.004
- Orientation of body/fixing collar ZB5AZ009: ± 2°30' (excluding cut-outs marked **a** and **b**).
- Tightening torque of screws ZBZ006: 0.6 N.m (5.3 lbf.in) max.
- Allow for one ZB5AZ079 fixing collar/pillar and its fixing screws:
  - every 90 mm / 3.54 in. horizontally (X), and 120 mm / 4.72 in. vertically (Y).
  - with each selector switch head (ZB5AD•, ZB5AJ•, ZB5AG•).

The fixing centers marked **a** and **b** are diagonally opposed and must align with those marked **4** and **5**.

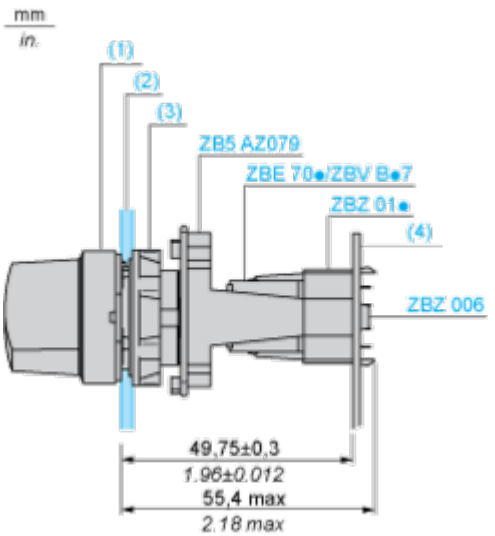

**(1)** Head ZB5AD•
**(2)** Panel
**(2)** Nut
**(4)** Printed circuit board

### Mounting of Adapter (Socket) ZBZ01•

- **1** 2 elongated holes for ZBZ006 screw access
- **2** 1 hole Ø 2.4 mm ± 0.05 / 0.09 in. ± 0.002 for centring adapter ZBZ01•
- **3** 8 × Ø 1.2 mm / 0.05 in. holes
- **4** 1 hole Ø 2.9 mm ± 0.05 / 0.11 in. ± 0.002, for aligning the printed circuit board (with cut-out marked **a**)
- **5** 1 elongated hole for aligning the printed circuit board (with cut-out marked **b**)
- **6** 4 holes Ø 2.4 mm / 0.09 in. for clipping in adapter ZBZ01•

Dimensions An + 18.1 relate to the Ø 2.4 mm ± 0.05 / 0.09 in. ± 0.002 holes for centring adapter ZBZ01•.

Technical Description

**Electrical Composition Corresponding to Code C3**



## Electrical Composition Corresponding to Code C4



## Electrical Composition Corresponding to Codes C14, SF2 and SR2



## Legend

Single contact



Double contact



Light block



Possible location

