Product data sheet

Specifications



Head for non illuminated push button, Harmony XB4, green mushroom 40mm, 22mm, latching, push-pull to release, unmarked

ZB4BT3

Main

Range of product	Harmony XB4
Product or component type	Head for non-illuminated push-button
Device short name	ZB4
Bezel material	Chromium plated metal
Mounting diameter	22 mm
Sale per indivisible quantity	1
Head type	Standard
Shape of signaling unit head	Round
Type of operator	latching
Reset	Push-pull
Operator profile	Green mushroom Ø 40 mm, unmarked
Cap/operator or lens colour	Green

Complementary

Mechanical durability	300000 cycles
Electrical composition code	C11 for <3 contacts using single blocks in front mounting C15 for <1 contacts using single blocks in front mounting C7 for <4 contacts using single blocks in front mounting C8 for <4 contacts using single and double blocks in front mounting C10 for <4 contacts using single and double blocks in front mounting
Device presentation	Basic element

Environment

Protective treatment	TH
Ambient air temperature for storage	-40…70 °C
Ambient air temperature for operation	-40…70 °C
Overvoltage category	Class I conforming to IEC 60536
IP degree of protection	IP66 conforming to IEC 60529 IP67 IP69 IP69K
Enclosure Type	UL type 4X/13
IK degree of protection	IK06 conforming to IEC 50102

Disclaimer: This documentation is not intended as a substitute for and is not to be used for determining suitability or reliability of these products for specific user applications

Standards	JIS C8201-5-1 EN/IEC 60947-1 CSA C22.2 No 14 EN/IEC 60947-5-1 EN/IEC 60947-5-5 UL 508 EN/IEC 60947-5-4 JIS C8201-1
Product certifications	BV CSA DNV LROS (Lloyds register of shipping) UL listed
Vibration resistance	5 gn (f= 2…500 Hz) conforming to IEC 60068-2-6
Shock resistance	30 gn (duration = 18 ms) for half sine wave acceleration conforming to IEC 60068-2-27 50 gn (duration = 11 ms) for half sine wave acceleration conforming to IEC 60068-2-27

Packing Units

Unit Type of Package 1	PCE
Number of Units in Package 1	1
Package 1 Height	4.400 cm
Package 1 Width	5.400 cm
Package 1 Length	9.600 cm
Package 1 Weight	72.000 g

Contractual warranty

Warranty (in months)	18

Environmental Data

Schneider Electric aims to achieve Net Zero status by 2050 through supply chain partnerships, lower impact materials, and circularity via our ongoing “Use Better, Use Longer, Use Again” campaign to extend product lifetimes and recyclability.

Environmental Data explained >

How we assess product sustainability >

Environmental footprint

Total lifecycle Carbon footprint	**0.8 kg CO2 eq.**
Carbon footprint of the manufacturing phase [A1 to A3]	**0.8 kg CO2 eq.**
Carbon footprint of the distribution phase [A4]	**0 kg CO2 eq.**
Carbon footprint of the installation phase [A5]	**0 kg CO2 eq.**
Carbon footprint of the use phase [B2, B3, B4, B6]	**0 kg CO2 eq.**
Carbon footprint of the end-of-life phase [C1 to C4]	**0 kg CO2 eq.**

Use Better

Materials and Substances

Average percentage of recycled plastic content	**12 %**
Average percentage of recycled metal content	**23 %**
Packaging made with recycled cardboard	**Yes**
Packaging without single use plastic	**Yes**
EU RoHS Directive	**Compliant**
REACh Regulation	**Free of Substances of Very High Concern above the threshold**
California proposition 65	**WARNING: This product can expose you to chemicals including: Di-isodecyl phthalate (DIDP), which is known to the State of California to cause birth defects or other reproductive harm. For more information go to www.P65Warnings.ca.gov**

Use Again

Repack and remanufacture

End of life manual availability	**End of Life Information**
Take-back	**No**

Dimensions Drawings

Dimensions

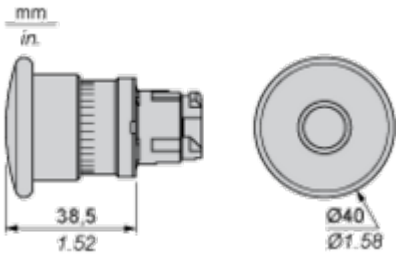

Mounting and Clearance

Panel Cut-out for Pushbuttons, Switches and Pilot Lights (Finished Holes, Ready for Installation)

Connection by Screw Clamp Terminals or Plug-in Connectors or on Printed Circuit Board	Connection by Faston Connectors
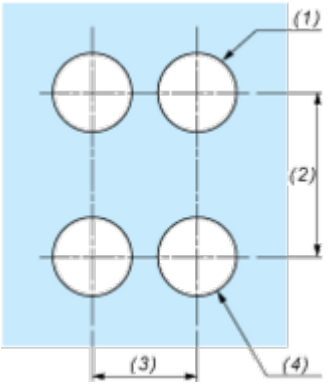	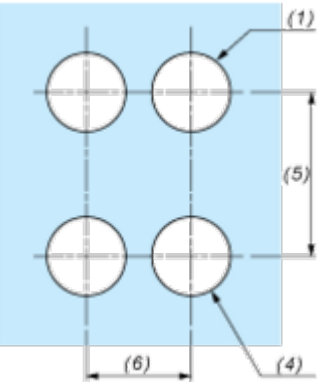

(1) Diameter on finished panel or support
(2) 40 mm min. / 1.57 in. min.
(3) 30 mm min. / 1.18 in. min.
(4) Ø 22.5 mm / 0.89 in. recommended (Ø 22.3 mm $_{0}^{+0.4}$ / 0.88 in. $_{0}^{+0.016}$)
(5) 45 mm min. / 1.78 in. min.
(6) 32 mm min. / 1.26 in. min.

Pushbuttons, Switches and Pilot Lights for Printed Circuit Board Connection

Panel Cut-outs (Viewed from Installer's Side)

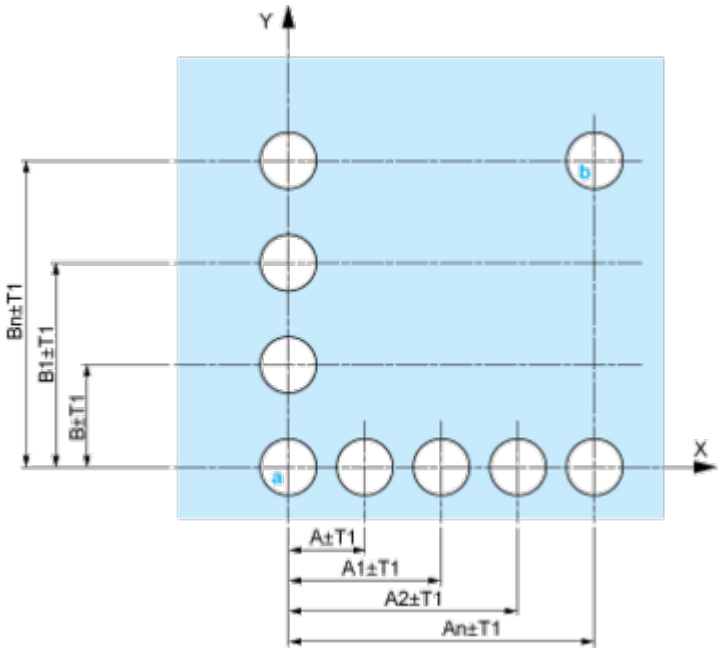

A: 30 mm min. / 1.18 in. min.
B: 40 mm min. / 1.57 in. min.

Printed Circuit Board Cut-outs (Viewed from Electrical Block Side)

Dimensions in mm

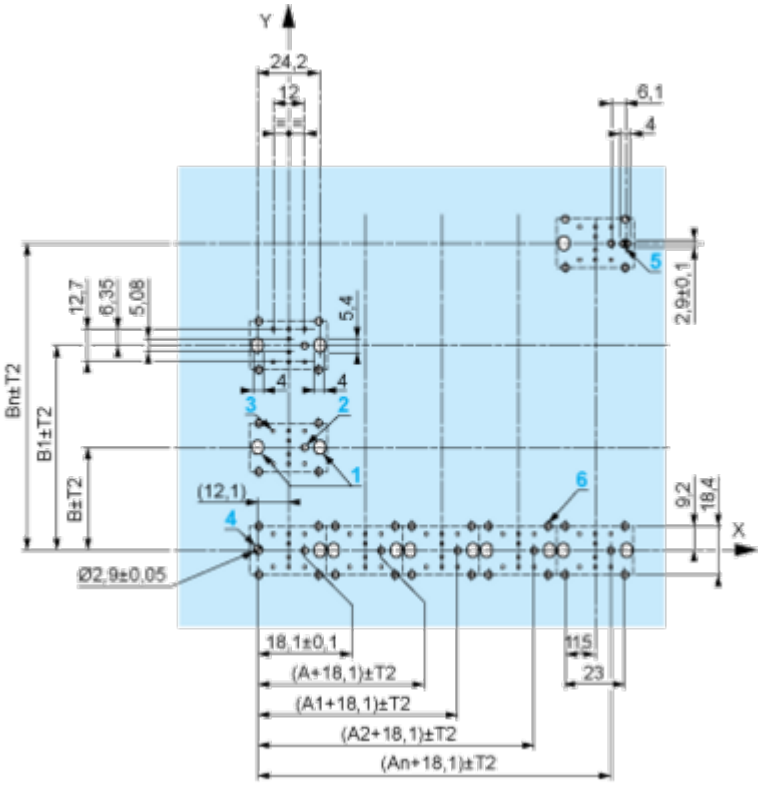

A: 30 mm min.
B: 40 mm min.
Dimensions in in.

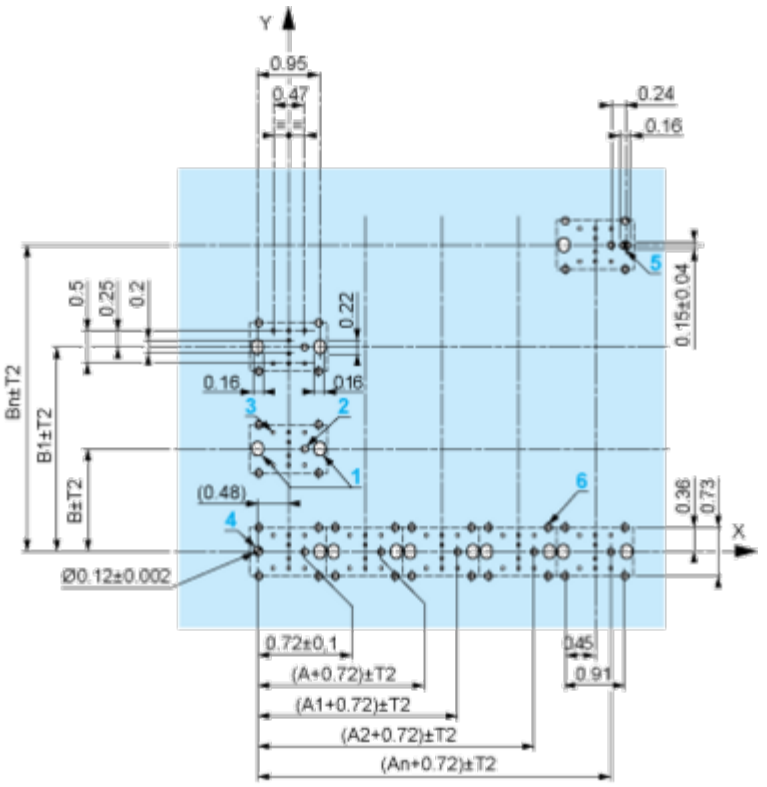

A: 1.18 in. min.
B: 1.57 in. min.

General Tolerances of the Panel and Printed Circuit Board

The cumulative tolerance must not exceed 0.3 mm / 0.012 in: T1 + T2 = 0.3 mm max.

Installation Precautions

- Minimum thickness of circuit board: 1.6 mm / 0.06 in.
- Cut-out diameter: 22.4 mm ± 0.1 / 0.88 in. ± 0.004
- Orientation of body/fixing collar ZB4 BZ009: ± 2°30' (excluding cut-outs marked **a** and **b**).
- Tightening torque of screws ZBZ 006: 0.6 N.m (5.3 lbf.in) max.
- Allow for one ZB4 BZ079 fixing collar/pillar and its fixing screws:
  - every 90 mm / 3.54 in. horizontally (X), and 120 mm / 4.72 in. vertically (Y).
  - with each selector switch head (ZB4 BD•, ZB4 BJ•, ZB4 BG•).

The fixing centers marked **a** and **b** are diagonally opposed and must align with those marked **4** and **5**.

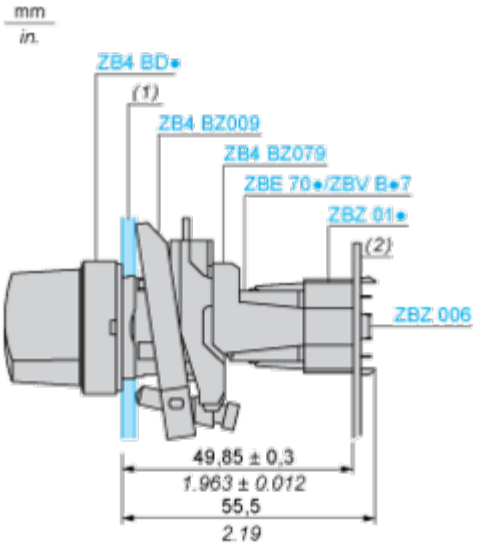

(1) Panel
(2) Printed circuit board

Mounting of Adapter (Socket) ZBZ 01•

- **1** 2 elongated holes for ZBZ 006 screw access
- **2** 1 hole Ø 2.4 mm ± 0.05 / 0.09 in. ± 0.002 for centring adapter ZBZ 01•
- **3** 8 × Ø 1.2 mm / 0.05 in. holes
- **4** 1 hole Ø 2.9 mm ± 0.05 / 0.11 in. ± 0.002, for aligning the printed circuit board (with cut-out marked **a**)
- **5** 1 elongated hole for aligning the printed circuit board (with cut-out marked **b**)
- **6** 4 holes Ø 2.4 mm / 0.09 in. for clipping in adapter ZBZ 01•

Dimensions An + 18.1 relate to the Ø 2.4 mm ± 0.05 / 0.09 in. ± 0.002 holes for centring adapter ZBZ 01•.

Technical Description

Electrical Composition Corresponding to Code C7

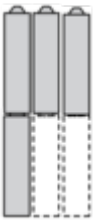

Electrical Compositions Corresponding to Code C8

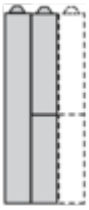

Electrical Compositions Corresponding to Code C10



Electrical Composition Corresponding to Codes C9, C11, SF1 and SR1



Electrical Composition Corresponding to Code C15

1 N/O

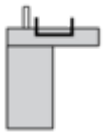

1 N/C

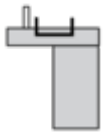

1 N/O + N/C or 1 N/O + N/O or 1 N/C + N/C

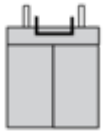

Legend

Single contact



Double contact



Light block



Possible location

