Product data sheet

Specifications



Empty enclosure control station, Harmony 9001K, Harmony 9001SK, aluminium, 3 cut outs, 30mm

9001KY3

Main

Range of product	Harmony 9001SK Harmony 9001K
Product or component type	Empty enclosure
Device short name	9001K
Number of cut-out	3 cut-outs
Cable entry	1 entry tapped for 3/4" cable gland

Complementary

Product destination	For Ø 30 mm control and signalling units
Material	Aluminium
Net weight	1.56 kg

Environment

Protective treatment	TH
Ambient air temperature for storage	-40…70 °C
Ambient air temperature for operation	-25…70 °C
Overvoltage category	II conforming to IEC 61140
NEMA degree of protection	NEMA 1 NEMA 12 NEMA 13 NEMA 3 NEMA 4 NEMA 6

Packing Units

Unit Type of Package 1	PCE
Number of Units in Package 1	1
Package 1 Height	10.500 cm
Package 1 Width	11.000 cm
Package 1 Length	22.000 cm
Package 1 Weight	1.627 kg
Unit Type of Package 2	S03
Number of Units in Package 2	6
Package 2 Height	30.000 cm
Package 2 Width	30.000 cm

Disclaimer: This documentation is not intended as a substitute for and is not to be used for determining suitability or reliability of these products for specific user applications

Package 2 Length	40.000 cm
Package 2 Weight	10.245 kg

Contractual warranty

Warranty (in months)	18

Environmental Data

Schneider Electric aims to achieve Net Zero status by 2050 through supply chain partnerships, lower impact materials, and circularity via our ongoing “Use Better, Use Longer, Use Again” campaign to extend product lifetimes and recyclability.

Environmental Data explained >

How we assess product sustainability >

Environmental footprint

Total lifecycle Carbon footprint	**13 kg CO2 eq.**
Carbon footprint of the manufacturing phase [A1 to A3]	**11 kg CO2 eq.**
Carbon footprint of the distribution phase [A4]	**0.2 kg CO2 eq.**
Carbon footprint of the installation phase [A5]	**0.3 kg CO2 eq.**
Carbon footprint of the use phase [B2, B3, B4, B6]	**0 kg CO2 eq.**
Carbon footprint of the end-of-life phase [C1 to C4]	**1 kg CO2 eq.**
Environmental Disclosure	**Product Environmental Profile**

Use Better

Materials and Substances

Packaging made with recycled cardboard	**Yes**
Packaging without single use plastic	**Yes**
EU RoHS Directive	**Compliant**
REACh Regulation	**Free of Substances of Very High Concern above the threshold**
California proposition 65	**WARNING: This product can expose you to chemicals including: Nickel compounds, which is known to the State of California to cause cancer, and Di-isodecyl phthalate (DIDP), which is known to the State of California to cause birth defects or other reproductive harm. For more information go to www.P65Warnings.ca.gov**

Use Again

Repack and remanufacture

Recyclability potential, in %	**15**
End of life manual availability	**End of Life Information**
Take-back	**No**
WEEE Label	**The product must be disposed on European Union markets following specific waste collection and never end up in rubbish bins**

Dimensions Drawings

Dimensions

Below drawing shows a 2-hole enclosure. Refer to the product characteristics to get the number of holes.

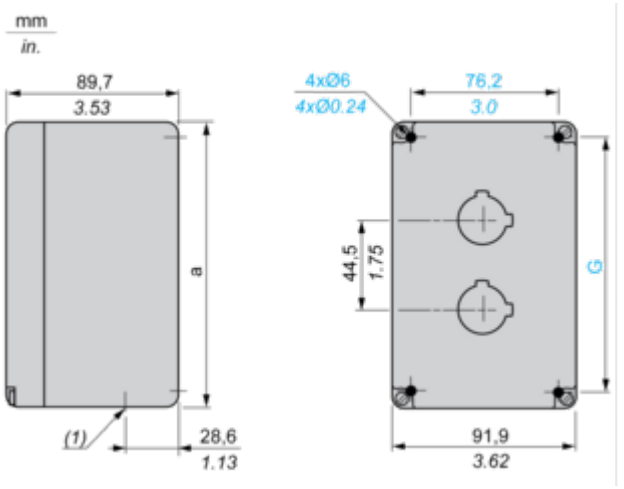

(1) Conduit thread: 9001 KY•: 3/4". 9001 TY• : 14 mm / 0.55 in.

a		G	
mm	in.	mm	in.
177.8	7.00	158.8	6.25

Image of product / Alternate images

Alternative







