Product data sheet

Specifications



Single foot switch, Harmony XPE, metal, orange, with cover, trigger mechanism, 1 step, 1 contact 1NC+NO, IP66

XPER510

Main

Range of product	Harmony XPE
Product or component type	Foot switch
Material	Metal
Foot switch type	Single foot switch
Device short name	XPER
Provided equipment	Cover
Trigger mechanism	With trigger mechanism
Contact operation	1 step
Contacts type and composition	1 NC + 1 NO
Colour	Orange

Complementary

Positive opening	With conforming to IEC 60947-5-1 appendix K
Connections - terminals	Screw clamp terminal, <= 1 x 2.5 mm² with or without cable end Screw clamp terminal, <= 2 x 1.5 mm² with or without cable end
cable entry	2 entries tapped for Pg 16 cable gland
Mechanical durability	15000000 cycles
[Ie] rated operational current	3 A, 240 V, AC-15, A300 0.27 A, 250 V, DC-13, Q300 conforming to IEC 60947-5-1 appendix A
[Ui] rated insulation voltage	500 V (pollution degree 3) conforming to IEC 60947-1 500 V (pollution degree 3) conforming to NF C 20-040 group C 500 V (pollution degree 3) conforming to VDE 0110 group C 300 V conforming to UL 508 300 V conforming to CSA C22.2 No 14
[Uimp] rated impulse withstand voltage	6 kV conforming to IEC 60947-1
Maximum resistance across terminals	25 MOhm conforming to IEC 60255-7 category 3 25 MOhm conforming to NF C 93-050 method A
Short-circuit protection	10 A cartridge fuse type gG conforming to IEC 60947-5-1 10 A cartridge fuse type gG conforming to VDE 0660-200
Rated operational power in W	10 W DC-13, operating rate <60 cyc/mn, 5000000 cycles, 24 V, load factor: 0.5 conforming to IEC 60947-5-1 appendix C 4 W DC-13, operating rate <60 cyc/mn, 5000000 cycles, 120 V, load factor: 0.5 conforming to IEC 60947-5-1 appendix C 7 W DC-13, operating rate <60 cyc/mn, 5000000 cycles, 48 V, load factor: 0.5 conforming to IEC 60947-5-1 appendix C
Net weight	2.57 kg

Environment

Disclaimer: This documentation is not intended as a substitute for and is not to be used for determining suitability or reliability of these products for specific user applications

Standards	NF E 09-031
Product certifications	FIMKO
Protective treatment	TC
Ambient air temperature for operation	-25…70 °C
Ambient air temperature for storage	-40…70 °C
Vibration resistance	15 gn (f= 10…500 Hz) conforming to IEC 60068-2-6
Shock resistance	150 gn conforming to NF E 09-031 20 gn conforming to IEC 60068-2-27
Overvoltage category	Class I conforming to IEC 61140 Class I conforming to NF C 20-030
IP degree of protection	IP66 conforming to IEC 60529 IP66 conforming to IEC 60529

Packing Units

Unit Type of Package 1	PCE
Number of Units in Package 1	1
Package 1 Height	16.500 cm
Package 1 Width	16.500 cm
Package 1 Length	20.000 cm
Package 1 Weight	2.634 kg
Unit Type of Package 2	S06
Number of Units in Package 2	30
Package 2 Height	75.000 cm
Package 2 Width	60.000 cm
Package 2 Length	80.000 cm
Package 2 Weight	87.490 kg

Contractual warranty

Warranty (in months)	18

Environmental Data

Schneider Electric aims to achieve Net Zero status by 2050 through supply chain partnerships, lower impact materials, and circularity via our ongoing “Use Better, Use Longer, Use Again” campaign to extend product lifetimes and recyclability.

Environmental Data explained >

How we assess product sustainability >

Environmental footprint

Total lifecycle Carbon footprint	**19 kg CO2 eq.**
Carbon footprint of the manufacturing phase [A1 to A3]	**17 kg CO2 eq.**
Carbon footprint of the distribution phase [A4]	**0.3 kg CO2 eq.**
Carbon footprint of the installation phase [A5]	**0.4 kg CO2 eq.**
Carbon footprint of the use phase [B2, B3, B4, B6]	**0 kg CO2 eq.**
Carbon footprint of the end-of-life phase [C1 to C4]	**1 kg CO2 eq.**
Environmental Disclosure	**Product Environmental Profile**

Use Better

Materials and Substances

Packaging made with recycled cardboard	**Yes**
Packaging without single use plastic	**Yes**
EU RoHS Directive	**Compliant**
REACh Regulation	**Free of Substances of Very High Concern above the threshold**
California proposition 65	**WARNING: This product can expose you to chemicals including: Di-isodecyl phthalate (DIDP), which is known to the State of California to cause birth defects or other reproductive harm. For more information go to www.P65Warnings.ca.gov**

Use Again

Repack and remanufacture

Recyclability potential, in %	**13**
Take-back	**No**
WEEE Label	**The product must be disposed on European Union markets following specific waste collection and never end up in rubbish bins**

Dimensions Drawings

Single Pedal Metal Foot Switch with Protective Cover

Dimensions

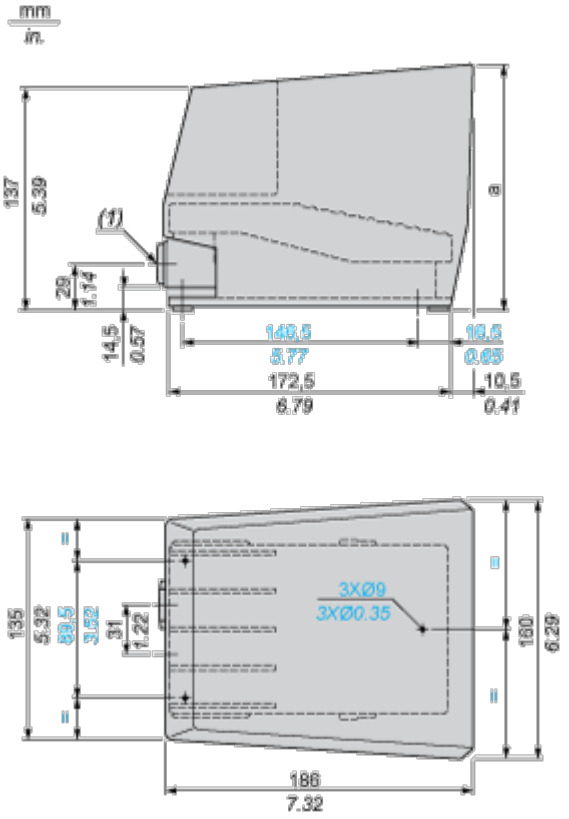

(1) 2 tapped entries for n° 16 (Pg 16) cable gland. For ISO M20, use adaptor DE9RA620.

Performance Curves

Electrical Durability of Contacts

AC-15 Utilization Category

Operating rate: 3600 operating cycles/hour. Load factor: 0.5.
Inductive circuit:

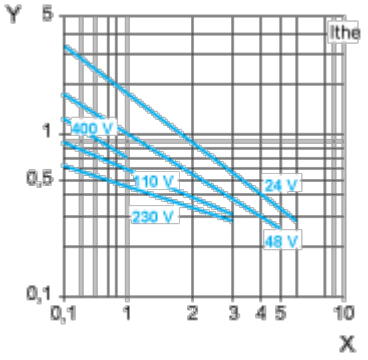

X Current in A

Y Millions of operating cycles

DC-13 Utilization Category

Refer to the product characteristic “Operational power in W”.

Image of product / Alternate images

Alternative

