Product data sheet

Specifications



Wireless and batteryless transmitter, Harmony XB5R, push button, metal, red, 22mm, spring return

ZB4RTA4

Main

Range of product	Harmony XB5
Product or component type	Wireless and batteryless transmitter
Device short name	XB5R
Bezel material	Chromium plated metal
Fixing collar material	Zamak
Mounting diameter	22 mm
Transmission frequency	2405 MHz
emission class	5M00G7W
Antenna type	Omnidirectional

Complementary

Shape of signaling unit head	Round
Type of operator	spring return push-button with transmitter
Operator profile	Red flush, unmarked
Max power consumption in W	1 mW
Number of channels	16
Modulation Technique	O-QPSK
Bandwidth	5 MHz
Antenna gain	0 dBi
Embedding depth	42 mm
CAD overall height	41.5 mm
CAD overall width	30 mm
CAD overall depth	43 mm
Net weight	0.045 kg
Operating travel	4.3 mm (total travel)
Operating force	10 N C/O changing electrical state
Mechanical robustness	Free fall resistance 1000 mm conforming to IEC 60068-2-32
Standards	CSA C22.2 No 14 IEC 60947-1 IEC 60947-5-1 UL 508

Disclaimer: This documentation is not intended as a substitute for and is not to be used for determining suitability or reliability of these products for specific user applications

Radio agreement	ANATEL ARIB T66 FCC ICASA RSS
Communication port protocol	Zigbee green power at 2.4 GHz conforming to IEEE 802.15.4
Maximum sensing distance	100 m in free field 25 m transmitter in a plastic box type XAL D and receiver in a metal enclosure 300 m transmitter in box type XAL D, receiver in metal enclosure and use relay-antenna
Acquisition time	2 ms
Response time	< 2 ms
Emission power	3 mW
Fixing mode	Fixing screw beneath head: 0.8…1.2 N.m
Electrical composition code	PW1

Environment

Protective treatment	TH
Ambient air temperature for storage	-40…70 °C
Ambient air temperature for operation	-40…70 °C
Relative humidity	95 % at -40…70 °C without condensation
IP degree of protection	IP66 (front face) conforming to IEC 60529 IP67 (front face) conforming to IEC 60529 IP69 (front face) conforming to IEC 60529 IP69K (front face) conforming to IEC 60529
IK degree of protection	IK03 conforming to IEC 50102
Mechanical durability	1000000 cycles
Shock resistance	25 gn (duration = 6 ms) for 6000 shocks conforming to IEC 60068-2-27 30 gn (duration = 18 ms) for half sine wave acceleration conforming to IEC 60068-2-27 50 gn (duration = 11 ms) for half sine wave acceleration conforming to IEC 60068-2-27
Vibration resistance	5 gn (f= 11…500 Hz) conforming to IEC 60068-2-6 +/- 10 mm (f= 2…11 Hz) conforming to IEC 60068-2-6
Electromagnetic compatibility	Electrostatic discharge immunity test - test level: 8 kV (in free air (in insulating parts)) conforming to IEC 61000-4-2 Electrostatic discharge immunity test - test level: 4 kV (on contact (on metal parts)) conforming to IEC 61000-4-2 Susceptibility to electromagnetic fields - test level: 20 V/m (80...3000 MHz) conforming to IEC 61000-4-3 Susceptibility to electromagnetic fields - test level: 6 V/m (3000...6000 MHz, distance = 20 m) conforming to IEC 61000-4-3
Product certifications	C-Tick GOST BT 2006/95/EC UL CSA
Directives	2004/108/EC - electromagnetic compatibility 1999/5/EC - R&TTE directive

Packing Units

Unit Type of Package 1	PCE
Number of Units in Package 1	1
Package 1 Height	3.500 cm

Package 1 Width	5.200 cm
Package 1 Length	8.700 cm
Package 1 Weight	82.000 g
Unit Type of Package 2	S01
Number of Units in Package 2	25
Package 2 Height	15.000 cm
Package 2 Width	15.000 cm
Package 2 Length	40.000 cm
Package 2 Weight	2.234 kg

Contractual warranty

Warranty (in months)	18

Environmental Data

Schneider Electric aims to achieve Net Zero status by 2050 through supply chain partnerships, lower impact materials, and circularity via our ongoing “Use Better, Use Longer, Use Again” campaign to extend product lifetimes and recyclability.

Environmental Data explained >

How we assess product sustainability >

Environmental footprint

Total lifecycle Carbon footprint	**32 kg CO2 eq.**
Carbon footprint of the manufacturing phase [A1 to A3]	**0.7 kg CO2 eq.**
Carbon footprint of the distribution phase [A4]	**0 kg CO2 eq.**
Carbon footprint of the installation phase [A5]	**0 kg CO2 eq.**
Carbon footprint of the use phase [B2, B3, B4, B6]	**31 kg CO2 eq.**
Carbon footprint of the end-of-life phase [C1 to C4]	**0 kg CO2 eq.**

Use Better

Materials and Substances

Packaging made with recycled cardboard	**Yes**
Packaging without single use plastic	**Yes**
SCIP Number	**E1d47e89-a4e1-4f33-a0c0-2fe5c9179aa4**
EU RoHS Directive	**Compliant By Exemption**
REACh Regulation	**Reference contains Substances of Very High Concern above the threshold**
California proposition 65	**WARNING: This product can expose you to chemicals including: Lead and lead compounds, which is known to the State of California to cause cancer and birth defects or other reproductive harm. For more information go to www.P65Warnings.ca.gov**

Use Longer

Lifetime extension

Product repair index	**A**

Use Again

Repack and remanufacture

Recyclability potential, in %	**12**
End of life manual availability	**End of Life Information**
Take-back	**No**
WEEE Label	**The product must be disposed on European Union markets following specific waste collection and never end up in rubbish bins**

Dimensions Drawings

Wireless and Batteryless Pushbutton - Transmitter

With Metal Pushbutton without Cap

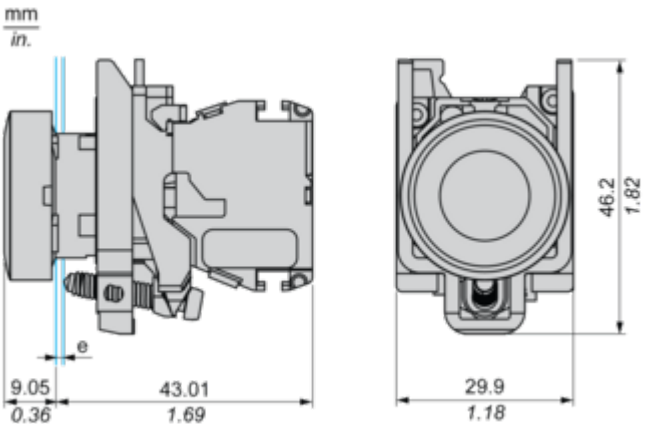

e: panel thickness 1 to 6 mm / 0.039 to 0.24 in.

Mounting and Clearance

Transmitter Mounting

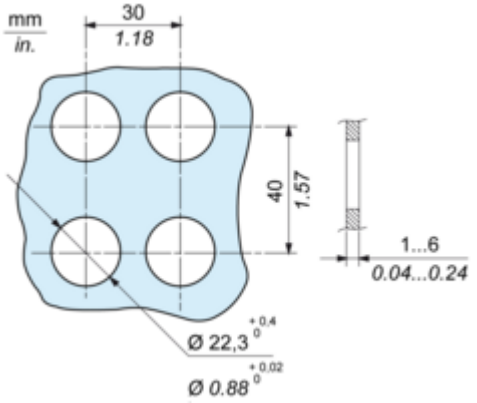

Transmitter Clearance in Free Field Unobstructed

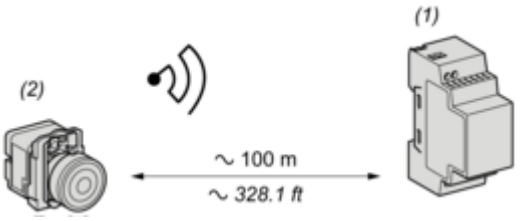

(1): Receiver
(2): Transmitter

Transmitter Clearance in a Metal Enclosure

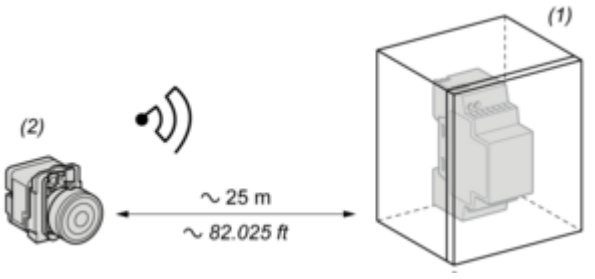

(1): Metal enclosure
(2): Transmitter
The range is reduced if the transmitter is placed in a metal enclosure (reduction factor:approx 10%)

Glass window	10...20 %
Plaster wall	30...45 %
Brick wall	60 %
Concrete wall	70...80 %
Metal structure	50...100 %

Image of product / Alternate images

Alternative

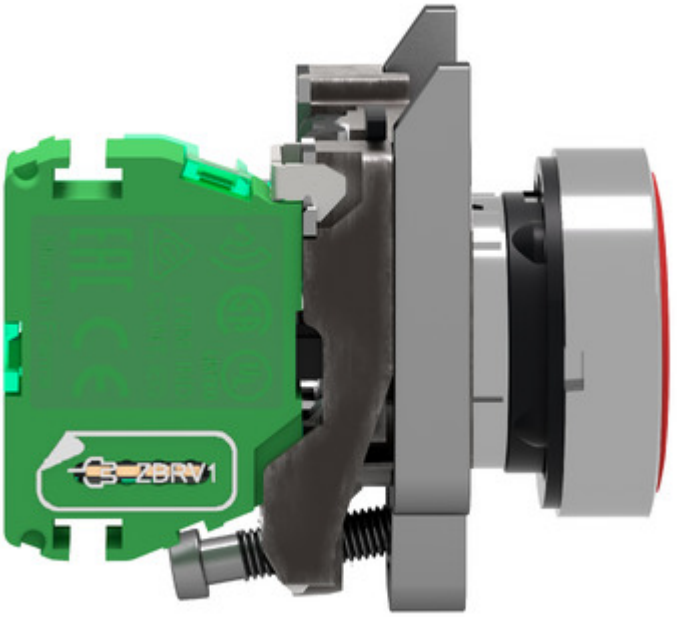

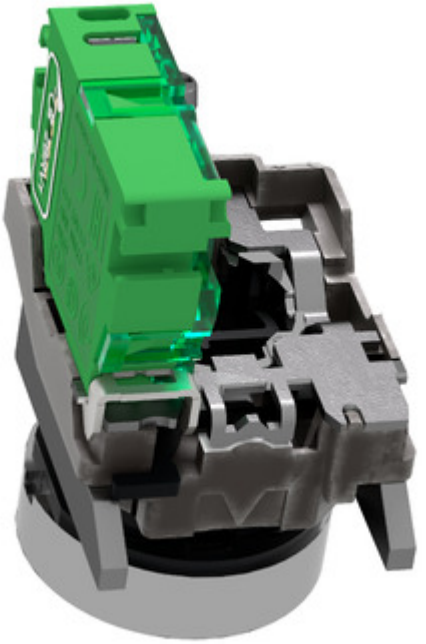

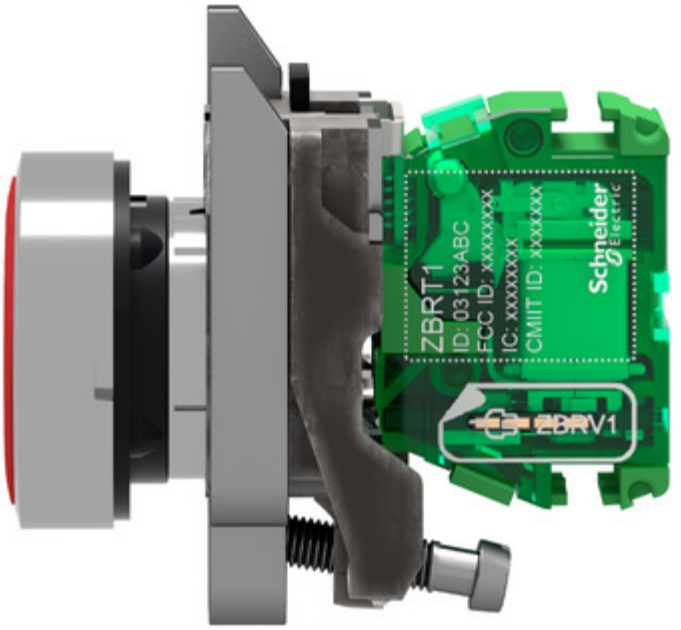
ZBRT1
ID: 03123ABC
FCC ID: xxxxxxxx
IC: xxxxxxxx
CMIIT ID: xxxxxxx
Schneider Electric
ZBRV1




ZB4BZ009


14
13
6