Product data sheet

Specifications



Circuit breaker, EasyPact MVS, 3 Poles, 2000A, 65kA, MF, ET2, fixed, manual

MVS20H3MF2L

Main

Range	EasyPact
Product name	MVS20H
Device short name	MVS20H
Product or component type	Circuit breaker
Device application	Distribution
Poles description	3P
Protected poles description	3P 3d
[In] rated current	2000 A at 40 °C
Network type	AC
[Ue] rated operational voltage	690 V AC 50/60 Hz conforming to IEC 60947-2
Breaking capacity code	H
Suitability for isolation	Yes conforming to IEC 60947-2
Utilisation category	Category B
Trip unit name	ET2I
Trip unit technology	Electronic
Trip unit rating	2000 A

Complementary

Network frequency	50/60 Hz
Control type	Manually operated
Mounting mode	Fixed
Mounting support	Rail Base plate
Connection position	Horizontal Vertical
Location of connection	Rear
[Ui] rated insulation voltage	1000 V AC 50/60 Hz conforming to IEC 60947-2
[Uimp] rated impulse withstand voltage	12 kV conforming to IEC 60947-2
Circuit breaker CT rating	2000 A
Breaking capacity	65 kA Icu at 220...440 V AC 50/60 Hz conforming to IEC 60947-2
[Ics] rated service breaking capacity	65 kA (Ics) at 220...440 V AC 50/60 Hz conforming to IEC 60947-2 50 kA (Ics) at 690 V AC 50/60 Hz conforming to IEC 60947-2

Disclaimer: This documentation is not intended as a substitute for and is not to be used for determining suitability or reliability of these products for specific user applications

Mechanical durability	20000 cycles (with maintenance) conforming to IEC 60947-2 10000 cycles (without maintenance) conforming to IEC 60947-2
Electrical durability	Category B: 6000 cycles 440 V AC 50/60 Hz without maintenance conforming to IEC 60947-2 Category B: 4000 cycles 690 V AC 50/60 Hz without maintenance conforming to IEC 60947-2
Connection pitch	115 mm without spreader
Contact position indicator	Yes
[Icm] rated short-circuit making capacity	143 kA (Icm) at 220...440 V AC 50/60 Hz conforming to IEC 60947-2
[Icw] rated short-time withstand current	65 kA (1 s) at 220...440 V AC 50/60 Hz conforming to IEC 60947-2 50 kA (1 s) at 690 V AC 50/60 Hz conforming to IEC 60947-2 50 kA (3 s) at 440/690 V AC 50/60 Hz conforming to IEC 60947-2
Trip unit protection functions	LI
Protection type	Instantaneous short-circuit protection Overload protection (long time)
Fault indication	Short-circuit Overload Internal fault
Long time pick-up adjustment type Ir	Adjustable 9 settings
Long time pick-up adjustment range	0.4...1 x In
Long time delay adjustment type	Adjustable 9 settings
[tr] long-time delay adjustment range	0.5…24 s at 6 x Ir
Thermal memory	20 minutes before and after tripping
Instantaneous pick-up adjustment type Ii	Adjustable 9 settings
Instantaneous pick-up adjustment range	1.5...10 x Ir
Zone selective interlocking ZSI	With
Current sensor rating range	400/2000 A
Maximum breaking time	25 ms
Maximum closing response time	70 ms
Height	352 mm
Width	422 mm
Depth	297 mm
Net weight	40 kg

Environment

Standards	IEC 60947-2
Product certifications	GOST IEC CCC CCS
Pollution degree	4 conforming to IEC 60664-1
IP degree of protection	IP40
Ambient air temperature for operation	-5…70 °C
Ambient air temperature for storage	-40…85 °C without control unit -25…85 °C with control unit

Packing Units

Unit Type of Package 1	PCE
Number of Units in Package 1	1
Package 1 Height	42.0 cm
Package 1 Width	35.0 cm
Package 1 Length	50.0 cm
Package 1 Weight	45.667 kg

Contractual warranty

Warranty (in months)	18

Environmental Data

Schneider Electric aims to achieve Net Zero status by 2050 through supply chain partnerships, lower impact materials, and circularity via our ongoing “Use Better, Use Longer, Use Again” campaign to extend product lifetimes and recyclability.

Environmental Data explained >

How we assess product sustainability >

Environmental footprint

Total lifecycle Carbon footprint	**8 978 kg CO2 eq.**
Carbon footprint of the manufacturing phase [A1 to A3]	**277 kg CO2 eq.**
Carbon footprint of the distribution phase [A4]	**12 kg CO2 eq.**
Carbon footprint of the installation phase [A5]	**1 kg CO2 eq.**
Carbon footprint of the use phase [B2, B3, B4, B6]	**8 603 kg CO2 eq.**
Carbon footprint of the end-of-life phase [C1 to C4]	**85 kg CO2 eq.**
Environmental Disclosure	**Product Environmental Profile**

Use Better

Materials and Substances

Packaging made with recycled cardboard	**Yes**
Packaging without single use plastic	**No, we have minimized the use of plastic in the packaging in compliance with regulations and considering quality and safety standards**
SCIP Number	**3f2d539a-6ab5-46aa-8603-9354f4ae3294**
EU RoHS Directive	**Compliant By Exemption**
REACh Regulation	**Reference contains Substances of Very High Concern above the threshold**
PVC free	**Yes**

Use Again

Repack and remanufacture

Recyclability potential, in %	**79**
End of life manual availability	**End of Life Information**
Removable battery	**Yes**
Take-back	**No**
WEEE Label	**The product must be disposed on European Union markets following specific waste collection and never end up in rubbish bins**

Dimensions Drawings

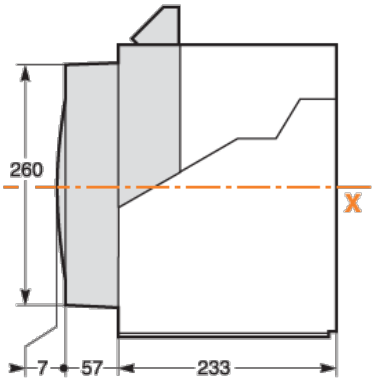

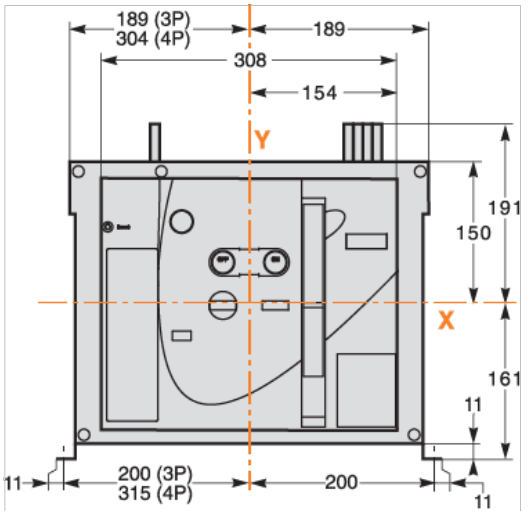

Assembly

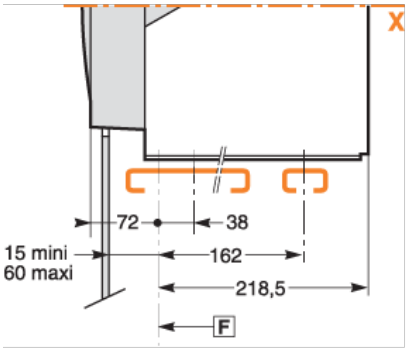
X
72
38
15 mini
60 maxi
162
218,5
F

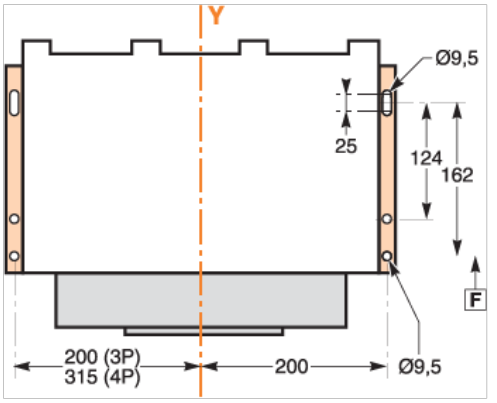
Y
Ø9,5
25
124
162
F
200 (3P)
315 (4P)
200
Ø9,5

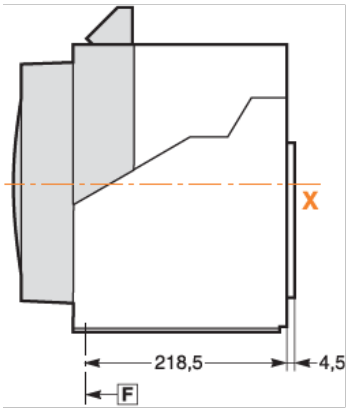
X
218,5
4,5
F

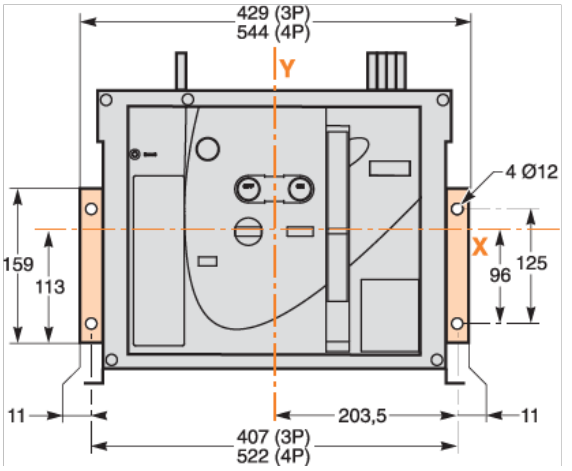
429 (3P)
544 (4P)
Y
4 Ø12
159
113
X
96
125
11
203,5
11
407 (3P)
522 (4P)

Performance Curves

