Product data sheet

Specifications



Circuit breaker, EasyPact MVS, 3 Poles, 4000A, 50kA, MDO, ETV5, drawout, manual

MVS40N3MW5V

Main

Range	EasyPact
Product name	MVS40N
Device short name	MVS40N
Product or component type	Circuit breaker
Device application	Distribution
Poles description	3P
Protected poles description	3P 3d
[In] rated current	4000 A at 40 °C
Network type	AC
[Ue] rated operational voltage	690 V AC 50/60 Hz conforming to IEC 60947-2
Breaking capacity code	N
Suitability for isolation	Yes conforming to IEC 60947-2
Utilisation category	Category B
Trip unit name	ETV5S
Trip unit technology	Electronic
Trip unit rating	4000 A

Complementary

Network frequency	50/60 Hz
Control type	Manually operated
Mounting mode	Drawout
Mounting support	Rail Base plate
Connection position	Horizontal Vertical
Location of connection	Rear
[Ui] rated insulation voltage	1000 V AC 50/60 Hz conforming to IEC 60947-2
[Uimp] rated impulse withstand voltage	12 kV conforming to IEC 60947-2
Circuit breaker CT rating	4000 A
Breaking capacity	55 kA Icu at 220...440 V AC 50/60 Hz conforming to IEC 60947-2
[Ics] rated service breaking capacity	55 kA (Ics) at 220...440 V AC 50/60 Hz conforming to IEC 60947-2
Mechanical durability	20000 cycles (with maintenance) conforming to IEC 60947-2 10000 cycles (without maintenance) conforming to IEC 60947-2

Disclaimer: This documentation is not intended as a substitute for and is not to be used for determining suitability or reliability of these products for specific user applications

Electrical durability	Category B: 5000 cycles 440 V AC 50/60 Hz without maintenance conforming to IEC 60947-2 Category B: 2500 cycles 690 V AC 50/60 Hz without maintenance conforming to IEC 60947-2
Connection pitch	115 mm without spreader
Contact position indicator	Yes
[Icm] rated short-circuit making capacity	121 kA (Icm) at 220...440 V AC 50/60 Hz conforming to IEC 60947-2
[Icw] rated short-time withstand current	42 kA (1 s) at 690 V AC 50/60 Hz conforming to IEC 60947-2 55 kA (1 s) at 220...440 V AC 50/60 Hz conforming to IEC 60947-2 30 kA (3 s) at 440/690 V AC 50/60 Hz conforming to IEC 60947-2
Trip unit protection functions	LSI
Protection type	Short time short-circuit protection Instantaneous short-circuit protection Overload protection (long time)
Fault indication	Short-circuit Overload Internal fault
Long time pick-up adjustment type Ir	Adjustable 9 settings
Long time pick-up adjustment range	0.4...1 x In
Long time delay adjustment type	Adjustable 9 settings
[tr] long-time delay adjustment range	0.5…24 s at 6 x Ir
Short-time pick-up adjustment type Isd	Adjustable 9 settings
[Isd] short-time pick-up adjustment range	1.5...10 x Ir
Short-time delay adjustment type	Adjustable 5 settings
[tsd] short-time delay adjustment range	100…400 ms
Instantaneous pick-up adjustment type Ii	Adjustable 9 settings
Instantaneous pick-up adjustment range	2...15 x In Off
Zone selective interlocking ZSI	With
Display type	Digital display
Type of measurement	Voltage
Current sensor rating range	1000/4000 A
Maximum breaking time	25 ms
Maximum closing response time	70 ms
Height	439 mm
Width	441 mm
Depth	395 mm
Net weight	90 kg

Environment

Standards	IEC 60947-2
Product certifications	IEC CCS GOST CCC
Pollution degree	4 conforming to IEC 60664-1

IP degree of protection	IP40
Ambient air temperature for operation	-5…70 °C
Ambient air temperature for storage	-40…85 °C without control unit -25…85 °C with control unit

Packing Units

Unit Type of Package 1	PCE
Number of Units in Package 1	1
Package 1 Height	42.0 cm
Package 1 Width	35.0 cm
Package 1 Length	50.0 cm
Package 1 Weight	38.0 kg

Contractual warranty

Warranty (in months)	18

Environmental Data

Schneider Electric aims to achieve Net Zero status by 2050 through supply chain partnerships, lower impact materials, and circularity via our ongoing “Use Better, Use Longer, Use Again” campaign to extend product lifetimes and recyclability.

Environmental Data explained >

How we assess product sustainability >

Environmental footprint

Total lifecycle Carbon footprint	**11 204 kg CO2 eq.**
Carbon footprint of the manufacturing phase [A1 to A3]	**679 kg CO2 eq.**
Carbon footprint of the distribution phase [A4]	**27 kg CO2 eq.**
Carbon footprint of the installation phase [A5]	**22 kg CO2 eq.**
Carbon footprint of the use phase [B2, B3, B4, B6]	**10 323 kg CO2 eq.**
Carbon footprint of the end-of-life phase [C1 to C4]	**154 kg CO2 eq.**
Environmental Disclosure	Product Environmental Profile

Use Better

Materials and Substances

Packaging made with recycled cardboard	**Yes**
Packaging without single use plastic	**No, we have minimized the use of plastic in the packaging in compliance with regulations and considering quality and safety standards**
SCIP Number	**3f2d539a-6ab5-46aa-8603-9354f4ae3294**
EU RoHS Directive	Compliant By Exemption
REACh Regulation	Reference contains Substances of Very High Concern above the threshold

Use Again

Repack and remanufacture

End of life manual availability	End of Life Information
Removable battery	**Yes**
Take-back	**No**
WEEE Label	**The product must be disposed on European Union markets following specific waste collection and never end up in rubbish bins**

Dimensions Drawings

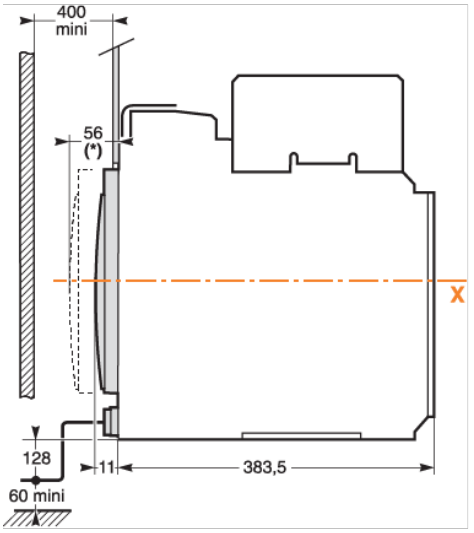

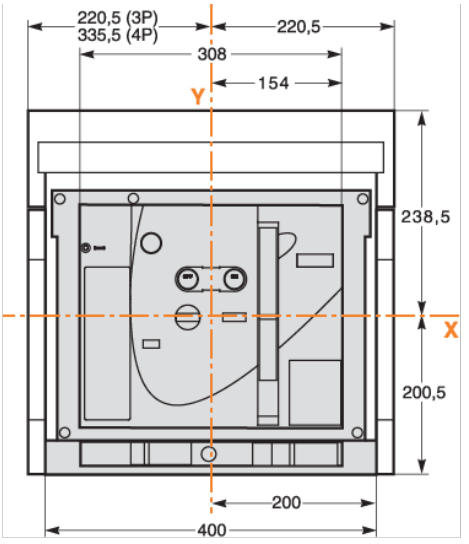

Assembly

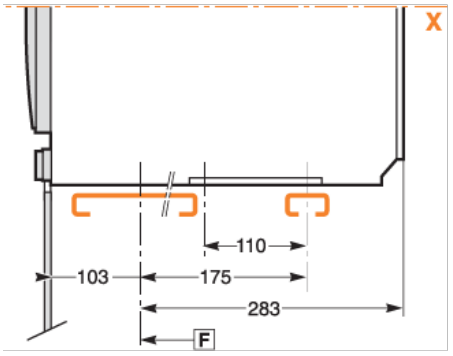
X
110
103
175
283
F

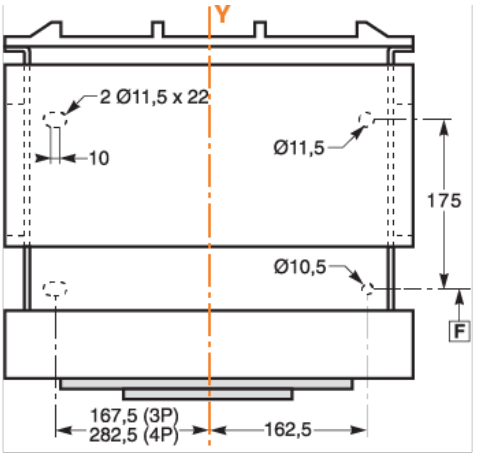
Y
2 Ø11,5 x 22
10
Ø11,5
175
Ø10,5
F
167,5 (3P)
282,5 (4P)
162,5

Performance Curves

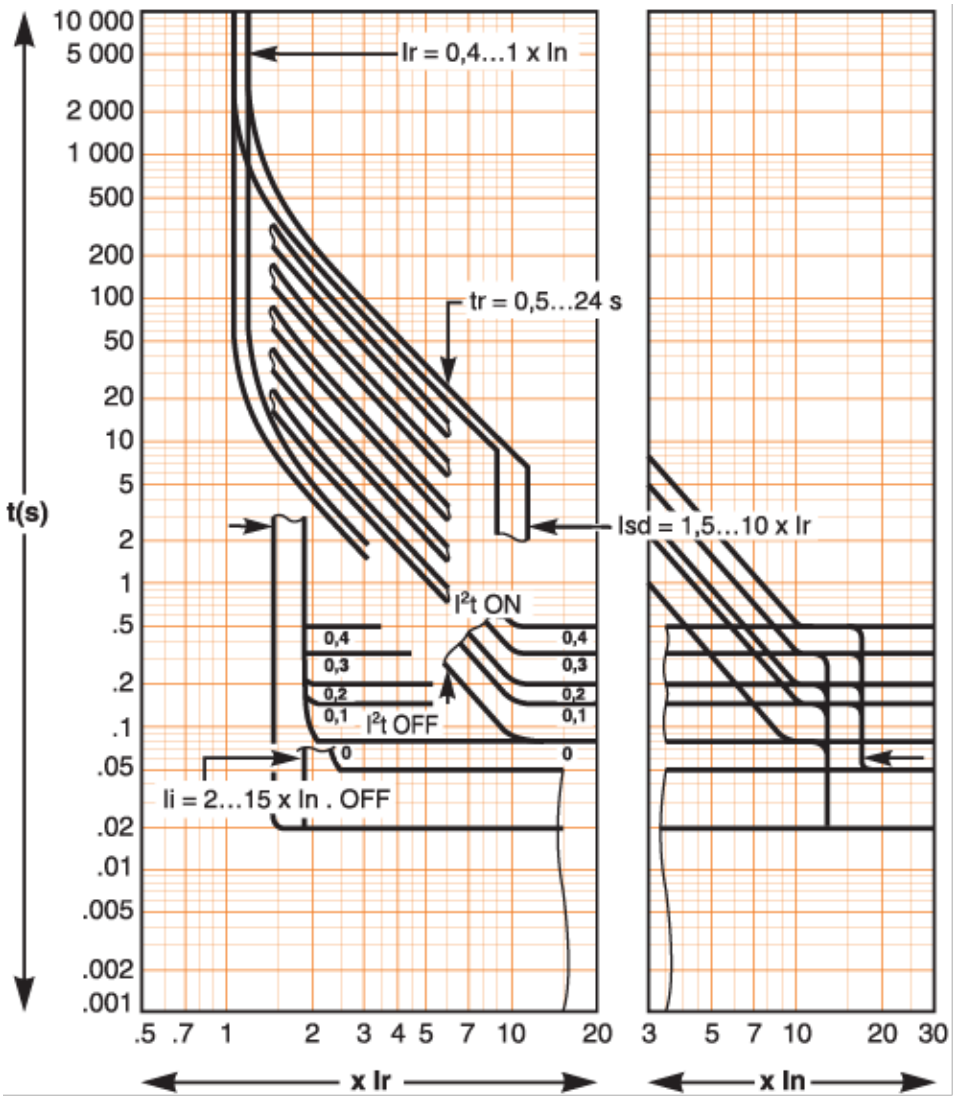

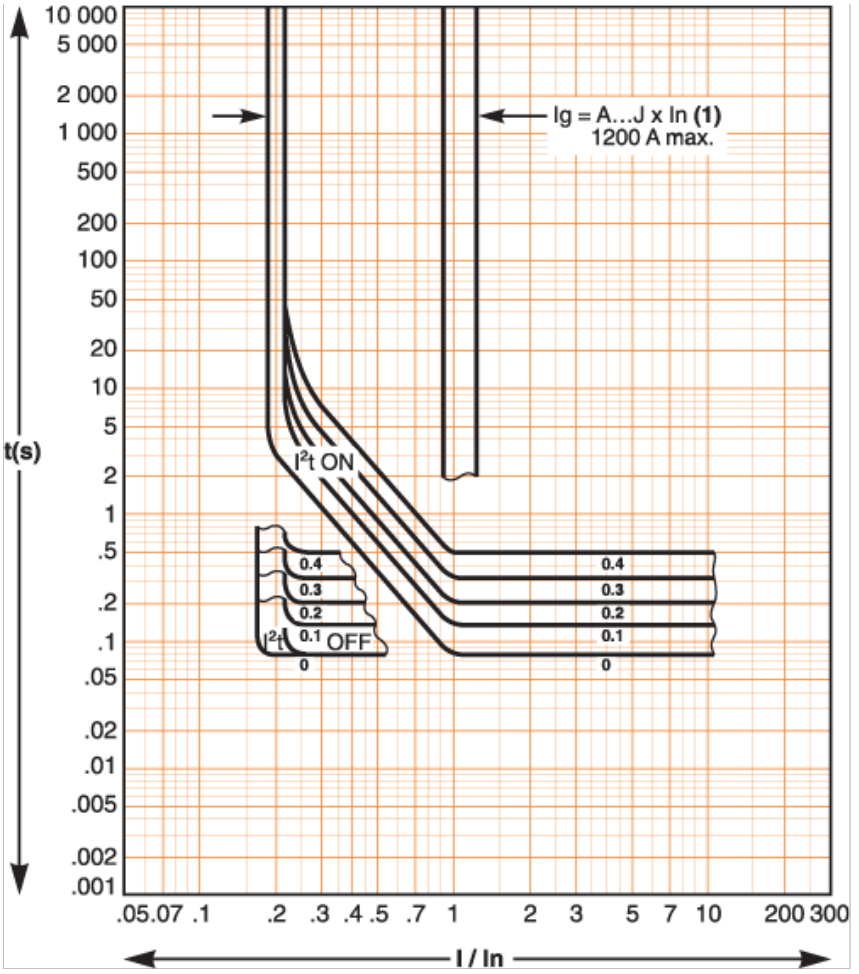

(1)

Ig = In x...	A	B	C	D	E	F	G	H	J
In ⩽ 400 A	0.3	0.3	0.4	0.5	0.6	0.7	0.8	0.9	1
400 A < In ⩽ 1000 A	0.2	0.3	0.4	0.5	0.6	0.7	0.8	0.9	1
In ⩾ 1250A	500	640	720	800	880	960	1040	1120	1200