# Product data sheet

Specifications



## Circuit breaker, EasyPact MVS, 3 Poles, 800A, 50kA, EDO, ETV2, drawout, electrical

MVS08N3NW2V

## Main

| | |
|---|---|
| **Range** | EasyPact |
| **Product name** | MVS08N |
| **Device short name** | MVS08N |
| **Product or component type** | Circuit breaker |
| **Device application** | Distribution |
| **Poles description** | 3P |
| **Protected poles description** | 3P 3d |
| **[In] rated current** | 800 A at 40 °C |
| **Network type** | AC |
| **[Ue] rated operational voltage** | 690 V AC 50/60 Hz conforming to IEC 60947-2 |
| **Breaking capacity code** | N |
| **Suitability for isolation** | Yes conforming to IEC 60947-2 |
| **Utilisation category** | Category B |
| **Trip unit name** | ETV2I |
| **Trip unit technology** | Electronic |
| **Trip unit rating** | 800 A |

## Complementary

| | |
|---|---|
| **Network frequency** | 50/60 Hz |
| **Control type** | Electrically operated |
| **Mounting mode** | Drawout |
| **Mounting support** | Base plate<br>Rail |
| **Connection position** | Vertical<br>Horizontal |
| **Location of connection** | Rear |
| **[Ui] rated insulation voltage** | 1000 V AC 50/60 Hz conforming to IEC 60947-2 |
| **[Uimp] rated impulse withstand voltage** | 12 kV conforming to IEC 60947-2 |
| **Circuit breaker CT rating** | 800 A |
| **Breaking capacity** | 50 kA Icu at 220...440 V AC 50/60 Hz conforming to IEC 60947-2 |
| **[Ics] rated service breaking capacity** | 50 kA (Ics) at 220...440 V AC 50/60 Hz conforming to IEC 60947-2 |
| **Mechanical durability** | 20000 cycles (with maintenance) conforming to IEC 60947-2<br>10000 cycles (without maintenance) conforming to IEC 60947-2 |

Disclaimer: This documentation is not intended as a substitute for and is not to be used for determining suitability or reliability of these products for specific user applications

| | |
|---|---|
| **Electrical durability** | Category B: 6000 cycles 440 V AC 50/60 Hz without maintenance conforming to IEC 60947-2<br>Category B: 4000 cycles 690 V AC 50/60 Hz without maintenance conforming to IEC 60947-2 |
| **Connection pitch** | 115 mm without spreader |
| **Contact position indicator** | Yes |
| **[Icm] rated short-circuit making capacity** | 105 kA (Icm) at 220...440 V AC 50/60 Hz conforming to IEC 60947-2 |
| **[Icw] rated short-time withstand current** | 50 kA (1 s) at 220...440 V AC 50/60 Hz conforming to IEC 60947-2<br>42 kA (1 s) at 690 V AC 50/60 Hz conforming to IEC 60947-2<br>25 kA (3 s) at 440/690 V AC 50/60 Hz conforming to IEC 60947-2 |
| **Trip unit protection functions** | LI |
| **Protection type** | Overload protection (long time)<br>Instantaneous short-circuit protection |
| **Fault indication** | Short-circuit<br>Overload<br>Internal fault |
| **Long time pick-up adjustment type Ir** | Adjustable 9 settings |
| **Long time pick-up adjustment range** | 0.4...1 x In |
| **Long time delay adjustment type** | Adjustable 9 settings |
| **[tr] long-time delay adjustment range** | 0.5…24 s at 6 x Ir |
| **Thermal memory** | 20 minutes before and after tripping |
| **Instantaneous pick-up adjustment type Ii** | Adjustable 9 settings |
| **Instantaneous pick-up adjustment range** | 1.5...10 x Ir |
| **Zone selective interlocking ZSI** | With |
| **Display type** | Digital display |
| **Type of measurement** | Voltage |
| **Current sensor rating range** | 400/2000 A |
| **Maximum breaking time** | 25 ms |
| **Maximum closing response time** | 70 ms |
| **Height** | 439 mm |
| **Width** | 441 mm |
| **Depth** | 395 mm |
| **Net weight** | 70 kg |

# Environment

| | |
|---|---|
| **Standards** | IEC 60947-2 |
| **Product certifications** | CCC<br>CCS<br>IEC<br>GOST |
| **Pollution degree** | 4 conforming to IEC 60664-1 |
| **IP degree of protection** | IP40 |
| **Ambient air temperature for operation** | -5…70 °C |
| **Ambient air temperature for storage** | -40…85 °C without control unit<br>-25…85 °C with control unit |

## Packing Units

| | |
|---|---|
| **Unit Type of Package 1** | PCE |
| **Number of Units in Package 1** | 1 |
| **Package 1 Height** | 42.0 cm |
| **Package 1 Width** | 35.0 cm |
| **Package 1 Length** | 50.0 cm |
| **Package 1 Weight** | 38.0 kg |

## Contractual warranty

| | |
|---|---|
| **Warranty (in months)** | 18 |

## Environmental Data

Schneider Electric aims to achieve Net Zero status by 2050 through supply chain partnerships, lower impact materials, and circularity via our ongoing “Use Better, Use Longer, Use Again” campaign to extend product lifetimes and recyclability.

Environmental Data explained >

How we assess product sustainability >

### Environmental footprint

| | |
|---|---|
| Total lifecycle Carbon footprint | **2 075 kg CO2 eq.** |
| Carbon footprint of the manufacturing phase [A1 to A3] | **538 kg CO2 eq.** |
| Carbon footprint of the distribution phase [A4] | **21 kg CO2 eq.** |
| Carbon footprint of the installation phase [A5] | **17 kg CO2 eq.** |
| Carbon footprint of the use phase [B2, B3, B4, B6] | **1 376 kg CO2 eq.** |
| Carbon footprint of the end-of-life phase [C1 to C4] | **122 kg CO2 eq.** |
| Environmental Disclosure | Product Environmental Profile |

## Use Better

### Materials and Substances

| | |
|---|---|
| Packaging made with recycled cardboard | **Yes** |
| Packaging without single use plastic | **No, we have minimized the use of plastic in the packaging in compliance with regulations and considering quality and safety standards** |
| SCIP Number | **3f2d539a-6ab5-46aa-8603-9354f4ae3294** |
| EU RoHS Directive | Compliant By Exemption |
| REACh Regulation | Reference contains Substances of Very High Concern above the threshold |

## Use Again

### Repack and remanufacture

| | |
|---|---|
| End of life manual availability | End of Life Information |
| Removable battery | **Yes** |
| Take-back | **No** |
| WEEE Label | **The product must be disposed on European Union markets following specific waste collection and never end up in rubbish bins** |

Dimensions Drawings

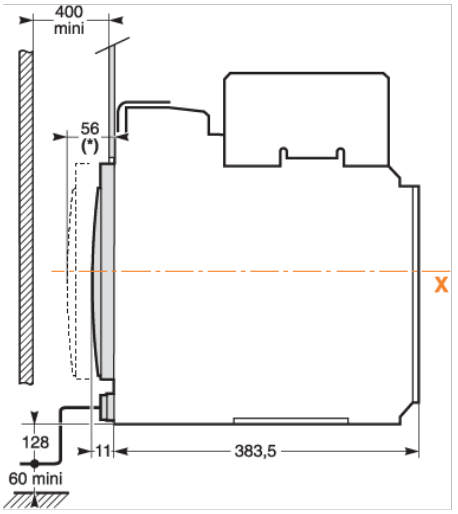


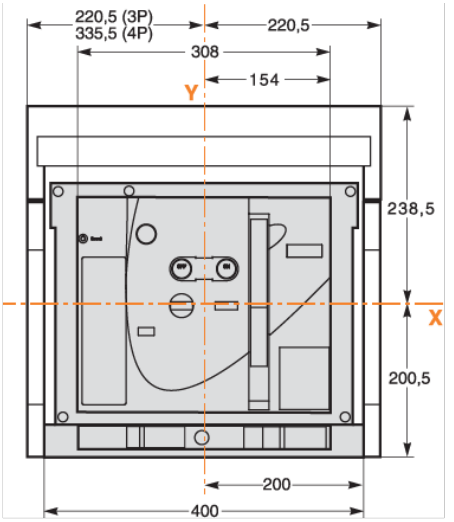

Assembly

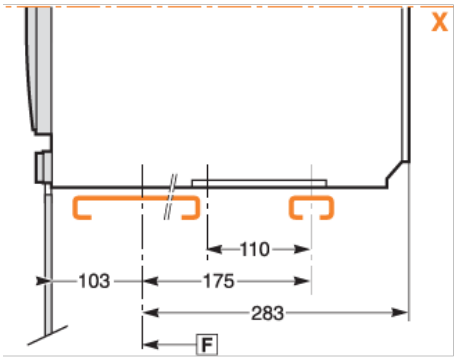
X
110
103
175
283
F

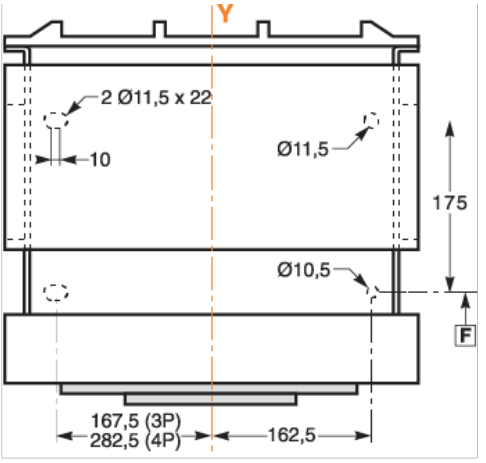
Y
2 Ø11,5 x 22
10
Ø11,5
175
Ø10,5
F
167,5 (3P)
282,5 (4P)
162,5

Performance Curves

