Product data sheet

Specifications



Motor circuit breaker,TeSys Deca frame 2,3P,9-14A,thermal magneticc,rotary handle,screw clamp terminals,bulk qty

GV2P16TQ

Main

Range	TeSys Deca
Product name	TeSys GV2
Product or component type	Motor circuit breaker
Device short name	GV2P
Device application	Motor protection
Trip unit technology	Thermal-magnetic

Complementary

Poles description	3P
Network type	AC
Utilisation category	Category A conforming to IEC 60947-2 AC-3 conforming to IEC 60947-4-1 AC-3e conforming to IEC 60947-4-1
Network frequency	50/60 Hz conforming to IEC 60947-2
Motor power kW	5.5 kW at 400/415 V AC 50/60 Hz 7.5 kW at 500 V AC 50/60 Hz 9 kW at 690 V AC 50/60 Hz 11 kW at 690 V AC 50/60 Hz
Breaking capacity	100 kA Icu at 230/240 V AC 50/60 Hz conforming to IEC 60947-2 100 kA Icu at 400/415 V AC 50/60 Hz conforming to IEC 60947-2 50 kA Icu at 440 V AC 50/60 Hz conforming to IEC 60947-2 42 kA Icu at 500 V AC 50/60 Hz conforming to IEC 60947-2 6 kA Icu at 690 V AC 50/60 Hz conforming to IEC 60947-2
[Ics] rated service short-circuit breaking capacity	100 % at 230/240 V AC 50/60 Hz conforming to IEC 60947-2 100 % at 400/415 V AC 50/60 Hz conforming to IEC 60947-2 75 % at 440 V AC 50/60 Hz conforming to IEC 60947-2 75 % at 500 V AC 50/60 Hz conforming to IEC 60947-2 100 % at 690 V AC 50/60 Hz conforming to IEC 60947-2
Control type	Rotary handle
[In] rated current	14 A
Thermal protection adjustment range	9…14 A conforming to IEC 60947-2
Magnetic tripping current	253.4 A
[Ith] conventional free air thermal current	14 A conforming to IEC 60947-2
[Ue] rated operational voltage	690 V AC 50/60 Hz conforming to IEC 60947-2
[Ui] rated insulation voltage	690 V AC 50/60 Hz conforming to IEC 60947-2
[Uimp] rated impulse withstand voltage	6 kV conforming to IEC 60947-2
Phase failure sensitivity	Yes conforming to IEC 60947-4-1

Disclaimer: This documentation is not intended as a substitute for and is not to be used for determining suitability or reliability of these products for specific user applications

Suitability for isolation	Yes conforming to IEC 60947-1
Power dissipation per pole	2.5 W
Mechanical durability	100000 cycles
Electrical durability	100000 cycles for AC-3 at 415 V In 100000 cycles for AC-3e at 415 V In
Rated duty	Uninterrupted conforming to IEC 60947-4-1
Connections - terminals	Power circuit: screw clamp terminal 2 cable(s) 1…6 mm² - solid Power circuit: screw clamp terminal 2 cable(s) 1.5…6 mm² - flexible without cable end Power circuit: screw clamp terminal 2 cable(s) 1…4 mm² - flexible with cable end
Tightening torque	1.7 N.m - on screw clamp terminal
Fixing mode	35 mm symmetrical DIN rail: clipped Panel: screwed (with 2 x M4 screws)
Mounting position	Horizontal Vertical
Width	45 mm
Height	89 mm
Depth	97 mm
Quantity per set	Set of 24
Colour	Dark grey

Environment

Standards	EN/IEC 60947-2 EN/IEC 60947-4-1 UL 60947-4-1 CSA C22.2 No 60947-4-1 IEC/EN 60335-2-40:Annex JJ IEC/EN 60335-1:Clause 30.2
Product certifications	CE UKCA CCC cULus EAC ATEX LROS (Lloyds register of shipping) BV RINA DNV-GL
IK degree of protection	IK04
IP degree of protection	IP20 conforming to IEC 60529
Climatic withstand	conforming to IACS E10
Ambient air temperature for storage	-40…80 °C
Fire resistance	960 °C conforming to IEC 60695-2-11
Ambient air temperature for operation	-20…60 °C
Mechanical robustness	Shocks: 30 Gn for 11 ms Vibrations: 5 Gn, 5...150 Hz
Operating altitude	<= 2000 m

Packing Units

Unit Type of Package 1	PCE
Number of Units in Package 1	1

Package 1 Height	4.500 cm
Package 1 Width	9.000 cm
Package 1 Length	9.800 cm
Package 1 Weight	304.000 g
Unit Type of Package 2	S02
Number of Units in Package 2	24
Package 2 Height	15.000 cm
Package 2 Width	30.000 cm
Package 2 Length	40.000 cm
Package 2 Weight	8.184 kg

Contractual warranty

Warranty (in months)	18

Environmental Data

Schneider Electric aims to achieve Net Zero status by 2050 through supply chain partnerships, lower impact materials, and circularity via our ongoing “Use Better, Use Longer, Use Again” campaign to extend product lifetimes and recyclability.

Environmental Data explained >

How we assess product sustainability >

Environmental footprint

Total lifecycle Carbon footprint	**42 kg CO2 eq.**
Carbon footprint of the manufacturing phase [A1 to A3]	**2 kg CO2 eq.**
Carbon footprint of the distribution phase [A4]	**0.1 kg CO2 eq.**
Carbon footprint of the installation phase [A5]	**0 kg CO2 eq.**
Carbon footprint of the use phase [B2, B3, B4, B6]	**40 kg CO2 eq.**
Carbon footprint of the end-of-life phase [C1 to C4]	**0.5 kg CO2 eq.**
Environmental Disclosure	**Product Environmental Profile**

Use Better

Materials and Substances

Packaging made with recycled cardboard	**Yes**
Packaging without single use plastic	**Yes**
SCIP Number	**Cd9afc97-b700-4c24-8c5a-04f31f2d7dd2**
EU RoHS Directive	**Compliant By Exemption**
REACh Regulation	**Reference contains Substances of Very High Concern above the threshold**

Use Again

Repack and remanufacture

Recyclability potential, in %	**51**
End of life manual availability	**End of Life Information**
Take-back	**No**
WEEE Label	**The product must be disposed on European Union markets following specific waste collection and never end up in rubbish bins**

Performance Curves

Thermal-Magnetic Tripping Curves for GV2ME and GV2P

Average Operating Times at 20 °C Related to Multiples of the Setting Current

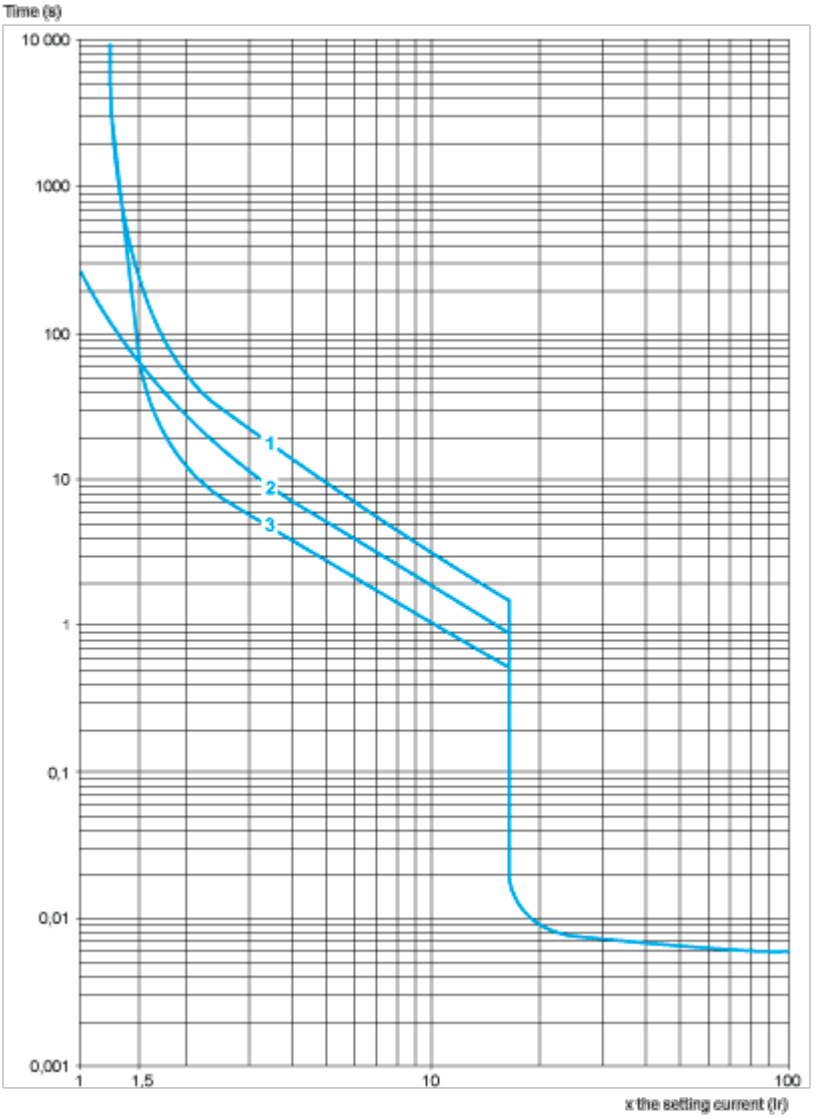

1 3 poles from cold state

2 2 poles from cold state

3 3 poles from hot state

Current Limitation on Short-Circuit for GV2ME and GV2P (3-Phase 400/415 V))

Dynamic Stress

I peak = f (prospective Isc) at 1.05 Ue = 435 V

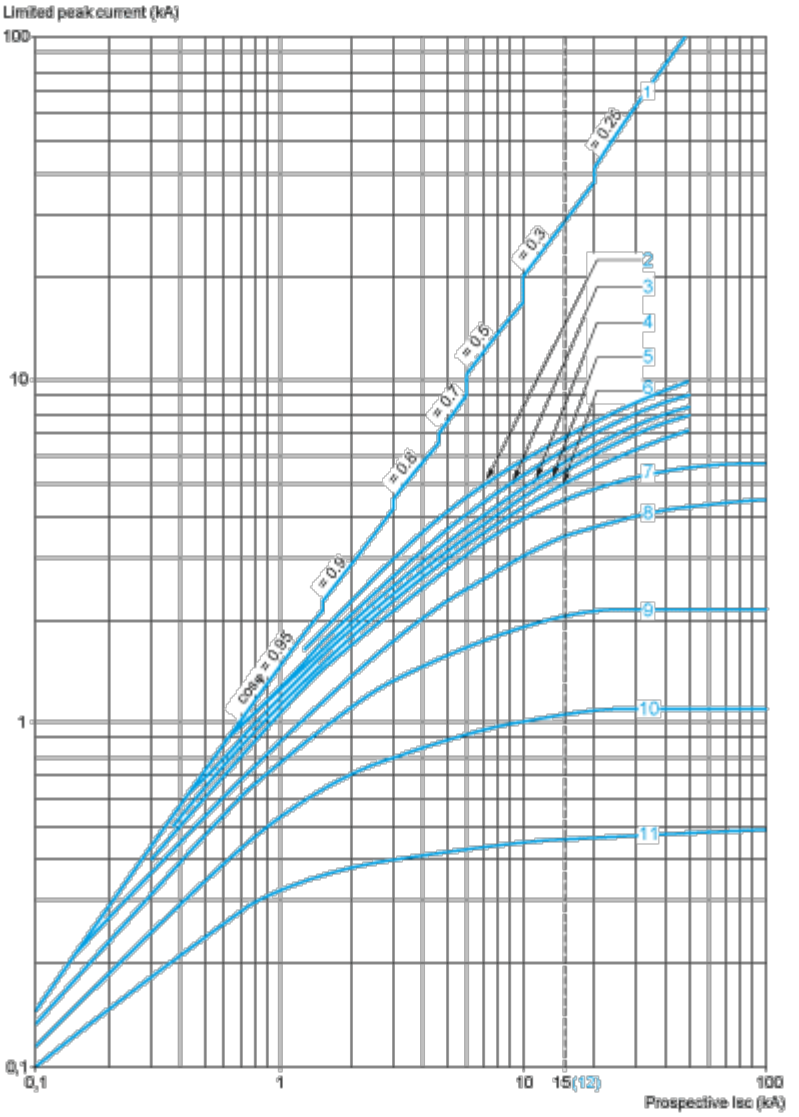

1 Maximum peak current

2 24-32 A

3 20-25 A

4 17-23 A

5 13-18 A

6 9-14 A

7 6-10 A

8 4-6.3 A

9 2.5-4 A

10 1.6-2.5 A

11 1-1.6 A

12 Limit of rated ultimate breaking capacity on short-circuit of GV2ME (14, 18, 23, and 25 A ratings).

Thermal Limit on Short-Circuit for GV2P

Thermal Limit in kA^2s in the Magnetic Operating Zone

Sum of I^2dt = f (prospective Isc) at 1.05 Ue = 435 V

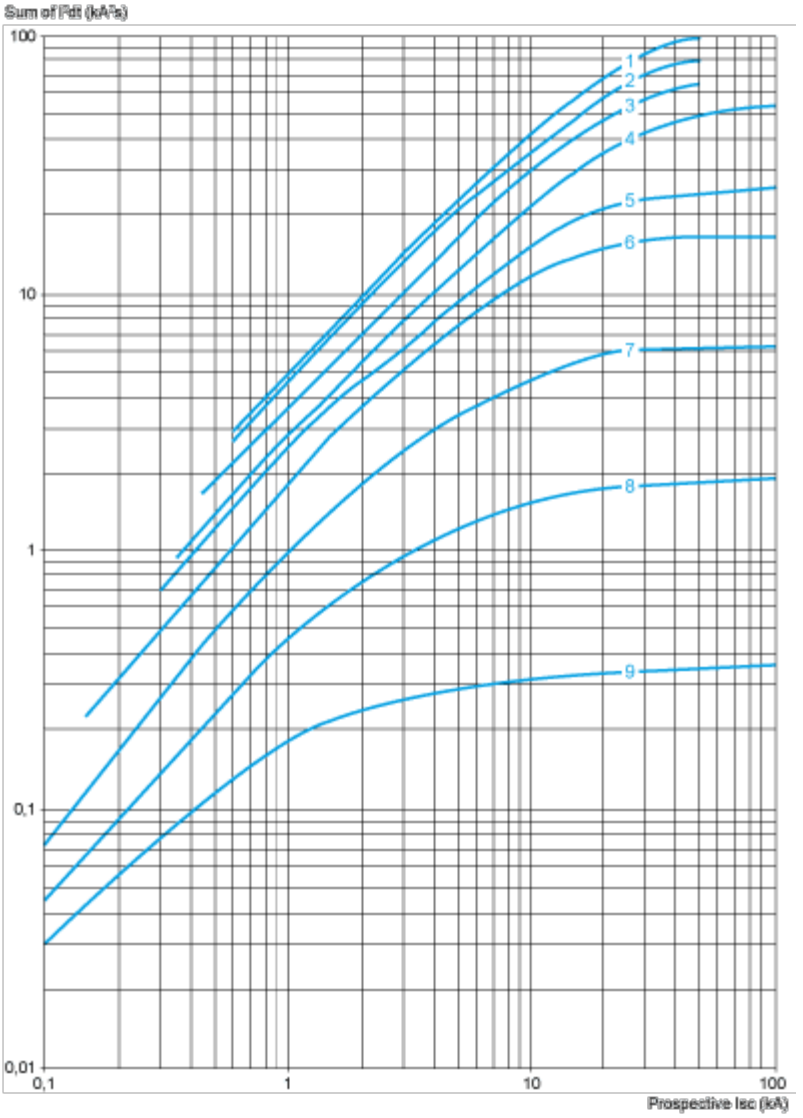

1 24-32 A

2 20-25 A

3 17-23 A

4 13-18 A

5 9-14 A

6 6-10 A

7 4-6.3 A

8 2.5-4 A

9 1.6-2.5 A

10 1-1.6 A

Dimensions Drawings

GV2P

On rail AM1 DE200, ED200 (35 x 15)

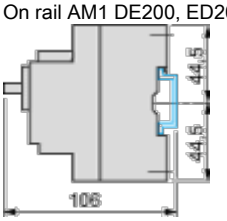

Panel mounted

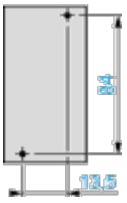

On pre-slotted plate AM1 PA

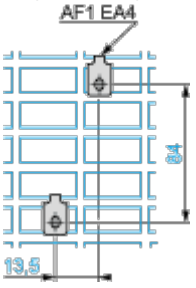

Adapter plate GK2AF01

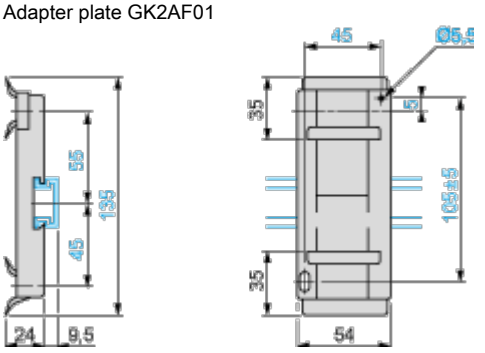

Combination GV2P + TeSys d contactor

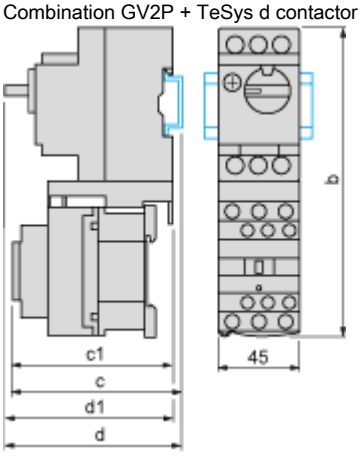

GV2P +	LC1D09…D18	LC1D25 and D32
b	176.4	186.8
c1	100.1	106.4
c	105.6	111.9
d1	95	95
d	100.5	100.5

Mounting

Mounting of External Operator GV2APN01, GV2APN02 or GV2APN04 for Motor Circuit Breakers GV2P

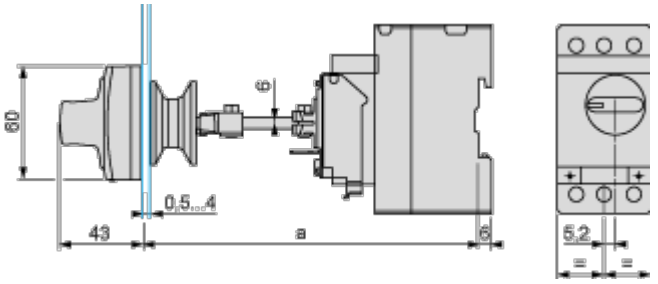

Door cut-out

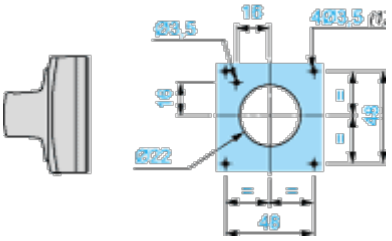

(1) For IP65 only.

Mounting of External Operator GVAPH02 for Motor Circuit Breakers GV2P

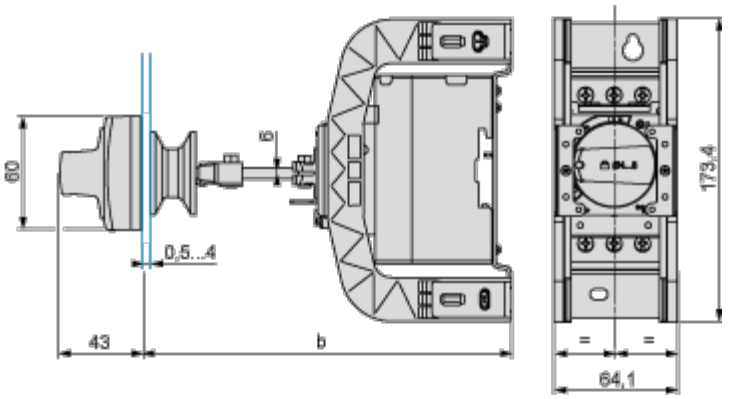

	a		b	
	Minimum	Maximum	Minimum	Maximum
GV2APN••	140	250	–	–
GV2APN•• + GVAPH02	–	–	151	250

	a		b	
	Minimum	Maximum	Minimum	Maximum
GV2APN•• + GVAPK11	250	434	–	–
GV2APN•• + GVAPH02 + GVAPK11	–	–	250	445

Door cut-out

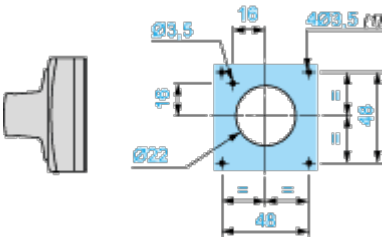

(1) For IP65 only.

Connections and Schema

GV2P••

