Product data sheet

Specifications



Control relay, TeSys Deca, 3NO+2NC, <=690V, 125 VDC standard coil, screw clamp terminals

CAD32GD

Main

Range	TeSys TeSys Deca
Product name	TeSys CAD
Product or component type	Control relay
Device short name	CAD
Contactor application	Control circuit

Complementary

Utilisation category	DC-13 AC-14 AC-15
Pole contact composition	3 NO + 2 NC
[Ue] rated operational voltage	<= 690 V AC 25...400 Hz
Control circuit type	DC standard
[Uc] control circuit voltage	125 V DC
[Uimp] rated impulse withstand voltage	6 kV conforming to IEC 60947
[Ith] conventional free air thermal current	10 A (at 60 °C)
Irms rated making capacity	140 A AC conforming to IEC 60947-5-1 250 A DC conforming to IEC 60947-5-1
[Icw] rated short-time withstand current	100 A - 1 s 120 A - 500 ms 140 A - 100 ms
Associated fuse rating	10 A gG conforming to IEC 60947-5-1
[Ui] rated insulation voltage	600 V UL certified 600 V CSA certified 690 V conforming to IEC 60947-5-1
Mounting support	Rail Plate
Connections - terminals	Screw clamp terminals 1 cable(s) 1…4 mm²flexible without cable end Screw clamp terminals 2 cable(s) 1…4 mm²flexible without cable end Screw clamp terminals 1 cable(s) 1…4 mm²flexible with cable end Screw clamp terminals 2 cable(s) 1…2.5 mm²flexible with cable end Screw clamp terminals 1 cable(s) 1…4 mm²solid without cable end Screw clamp terminals 2 cable(s) 1…4 mm²solid without cable end
Tightening torque	1.7 N.m - on screw clamp terminals - with screwdriver Philips No 2 1.7 N.m - on screw clamp terminals - with screwdriver flat Ø 6 mm 1.7 N.m - on screw clamp terminals - with screwdriver pozidriv No 2
Control circuit voltage limits	0.1...0.25 Uc (-40…70 °C):drop-out DC 0.7...1.25 Uc (-40…60 °C):operational DC 1...1.25 Uc (60…70 °C):operational DC

Disclaimer: This documentation is not intended as a substitute for and is not to be used for determining suitability or reliability of these products for specific user applications

Operating time	53...72 ms coil energisation and NO closing 16...24 ms coil de-energisation and NO opening 47...63 ms coil energisation and NC opening 15...25 ms coil de-energisation and NC closing
Mechanical durability	30 Mcycles
Maximum operating rate	180 cyc/mn
Time constant	28 ms
Inrush power in W	5.4 W (at 20 °C)
Hold-in power consumption in W	5.4 W at 20 °C
Minimum switching voltage	17 V
Minimum switching current	5 mA
Non-overlap time	1.5 ms on energisation between NC and NO contact 1.5 ms on de-energisation between NC and NO contact
Insulation resistance	> 10 MOhm
Mechanical robustness	Shocks control relay open: 10 Gn for 11 ms conforming to IEC 60068-2-27 Shocks control relay closed: 15 Gn for 11 ms conforming to IEC 60068-2-27 Vibrations control relay open: 2 Gn, 5...300 Hz conforming to IEC 60068-2-6 Vibrations control relay closed: 4 Gn, 5...300 Hz conforming to IEC 60068-2-6
Height	77 mm
Width	45 mm
Depth	93 mm
Net weight	0.58 kg

Environment

Standards	EN/IEC 60947-5-1 GB/T 14048.5 UL 60947-5-1 CSA C22.2 No 60947-5-1 JIS C8201-5-1
Product certifications	CB CCC UL CSA EAC CE UKCA
IP degree of protection	IP2X front face conforming to VDE 0106
Protective treatment	TH conforming to IEC 60068
Ambient air temperature for operation	-40…60 °C 60…70 °C with derating
Ambient air temperature for storage	-60…80 °C
Operating altitude	0...3000 m

Packing Units

Unit Type of Package 1	PCE
Number of Units in Package 1	1
Package 1 Height	5 cm
Package 1 Width	9.2 cm
Package 1 Length	11.2 cm
Package 1 Weight	497 g

Unit Type of Package 2	S02
Number of Units in Package 2	15
Package 2 Height	15.000 cm
Package 2 Width	30.000 cm
Package 2 Length	40.000 cm
Package 2 Weight	7.728 kg
Unit Type of Package 3	P06
Number of Units in Package 3	240
Package 3 Height	75.000 cm
Package 3 Width	60.000 cm
Package 3 Length	80.000 cm
Package 3 Weight	131.648 kg

Contractual warranty

Warranty (in months)	18

Environmental Data

Schneider Electric aims to achieve Net Zero status by 2050 through supply chain partnerships, lower impact materials, and circularity via our ongoing “Use Better, Use Longer, Use Again” campaign to extend product lifetimes and recyclability.

Environmental Data explained >

How we assess product sustainability >

Environmental footprint

Total lifecycle Carbon footprint	**38 kg CO2 eq.**
Carbon footprint of the manufacturing phase [A1 to A3]	**3 kg CO2 eq.**
Carbon footprint of the distribution phase [A4]	**0.2 kg CO2 eq.**
Carbon footprint of the installation phase [A5]	**0 kg CO2 eq.**
Carbon footprint of the use phase [B2, B3, B4, B6]	**33 kg CO2 eq.**
Carbon footprint of the end-of-life phase [C1 to C4]	**2 kg CO2 eq.**
Environmental Disclosure	**Product Environmental Profile**

Use Better

Materials and Substances

Packaging made with recycled cardboard	**Yes**
Packaging without single use plastic	**Yes**
SCIP Number	**B67ac941-f42f-4afd-894a-0b6f9cefde62**
EU RoHS Directive	**Compliant By Exemption**
REACh Regulation	**Reference contains Substances of Very High Concern above the threshold**
California proposition 65	**WARNING: This product can expose you to chemicals including: Antimony oxide & Antimony trioxide, which is known to the State of California to cause cancer and/or birth defects or other reproductive harm. For more information go to www.P65Warnings.ca.gov.**

Use Again

Repack and remanufacture

Recyclability potential, in %	**75**
End of life manual availability	**End of Life Information**
Take-back	**No**
WEEE Label	**The product must be disposed on European Union markets following specific waste collection and never end up in rubbish bins**

Image of product / Alternate images

Alternative



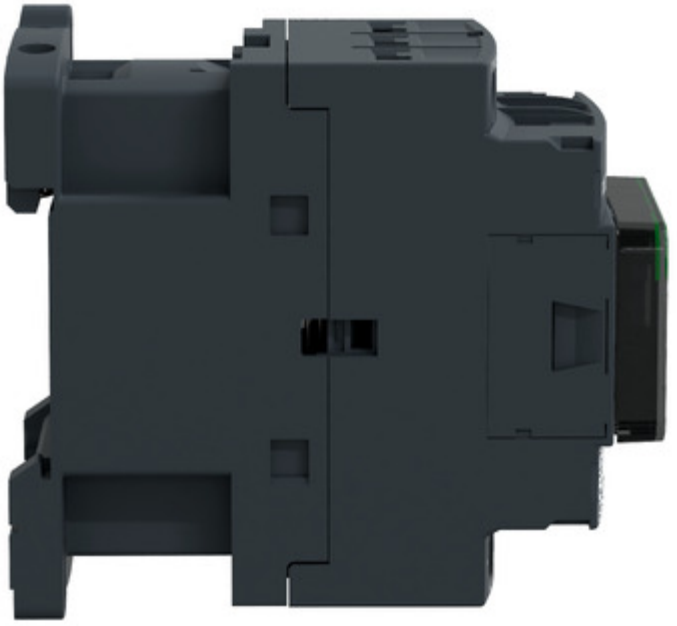


Schneider
telemecanique