Product data sheet

Specifications



switch disconnector, EasyPact MVS, 1250A, 50kA, 3 Poles, EDO, 240VAC, W/O, PROT, drawout electrical

MVS12N3NW0D

Main

Range of product	EasyPact MVS
Range	EasyPact
Product name	MVS12NA
Device short name	MVS12NA
Product or component type	Switch disconnector
Device application	Distribution
Poles description	3P
Network type	AC
Suitability for isolation	Yes conforming to IEC 60947-2
Utilisation category	AC-23A

Complementary

Network frequency	50/60 Hz
Control type	Electrically operated
Mounting mode	Drawout
Mounting support	Rail Base plate
Connection position	Vertical Horizontal
Location of connection	Rear
[Ie] rated operational current	AC-23A: 1250 A AC 50/60 Hz 690 V
Rated duty	Continuous
[Ui] rated insulation voltage	1000 V AC 50/60 Hz conforming to IEC 60947-3
[Uimp] rated impulse withstand voltage	12 kV conforming to IEC 60947-3
[Icw] rated short-time withstand current	50 kA during 1 s conforming to IEC 60947-3 at -5…70 °C 25 kA during 3 s conforming to IEC 60947-3 at -5…70 °C
[Icm] rated short-circuit making capacity	105 kA AC at 50/60 Hz
[Ue] rated operational voltage	690 V AC 50/60 Hz conforming to IEC 60947-3
Contact position indicator	Yes
Mechanical durability	20000 cycles with maintenance conforming to IEC 60947-3 10000 cycles without maintenance conforming to IEC 60947-3
Electrical durability	AC-23A: 6000000 cycles 440 V AC 50/60 Hz without maintenance conforming to IEC 60947-3 AC-23A: 4000000 cycles 690 V AC 50/60 Hz without maintenance conforming to IEC 60947-3

Disclaimer: This documentation is not intended as a substitute for and is not to be used for determining suitability or reliability of these products for specific user applications

Connection pitch	115 mm without spreader
Height	439 mm
Width	441 mm
Depth	395 mm
Net weight	70 kg

Environment

Standards	IEC 60947-3
Product certifications	IEC CCS GOST CCC
IP degree of protection	IP40
Pollution degree	4 conforming to IEC 60664-1
Ambient air temperature for operation	-5…70 °C
Ambient air temperature for storage	-40…85 °C without control unit

Packing Units

Unit Type of Package 1	PCE
Number of Units in Package 1	1
Package 1 Height	42.0 cm
Package 1 Width	35.0 cm
Package 1 Length	50.0 cm
Package 1 Weight	38.0 kg

Contractual warranty

Warranty (in months)	18

Environmental Data

Schneider Electric aims to achieve Net Zero status by 2050 through supply chain partnerships, lower impact materials, and circularity via our ongoing “Use Better, Use Longer, Use Again” campaign to extend product lifetimes and recyclability.

Environmental Data explained >

How we assess product sustainability >

Environmental footprint

Total lifecycle Carbon footprint	**3 901 kg CO2 eq.**
Carbon footprint of the manufacturing phase [A1 to A3]	**531 kg CO2 eq.**
Carbon footprint of the distribution phase [A4]	**21 kg CO2 eq.**
Carbon footprint of the installation phase [A5]	**17 kg CO2 eq.**
Carbon footprint of the use phase [B2, B3, B4, B6]	**3 212 kg CO2 eq.**
Carbon footprint of the end-of-life phase [C1 to C4]	**120 kg CO2 eq.**
Environmental Disclosure	**Product Environmental Profile**

Use Better

Materials and Substances

Packaging made with recycled cardboard	**Yes**
Packaging without single use plastic	**No, we have minimized the use of plastic in the packaging in compliance with regulations and considering quality and safety standards**
SCIP Number	**3f2d539a-6ab5-46aa-8603-9354f4ae3294**
EU RoHS Directive	**Compliant By Exemption**
REACh Regulation	**Reference contains Substances of Very High Concern above the threshold**
PVC free	**Yes**

Use Again

Repack and remanufacture

End of life manual availability	**End of Life Information**
Take-back	**No**
WEEE Label	**The product must be disposed on European Union markets following specific waste collection and never end up in rubbish bins**

Dimensions Drawings

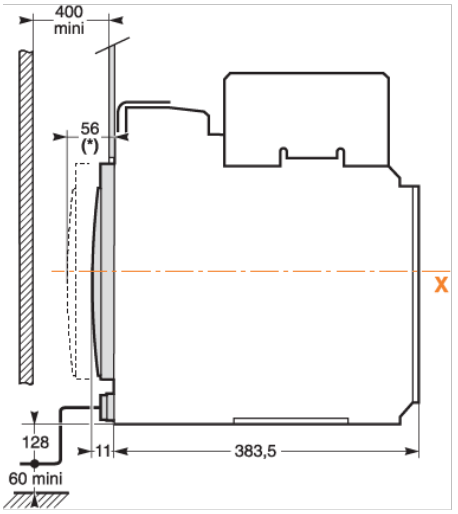

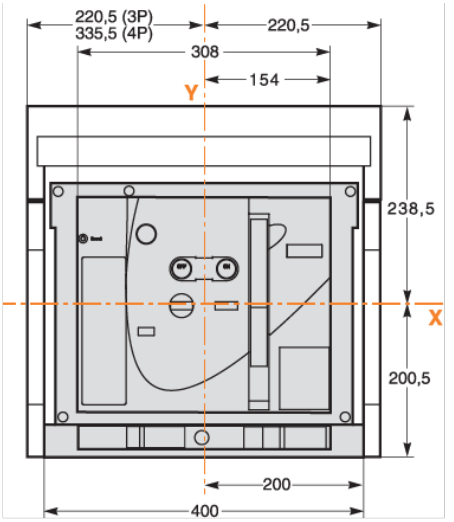

Assembly

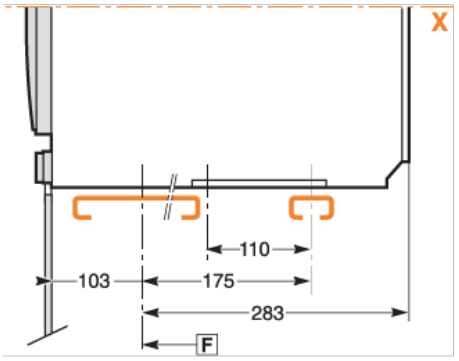
X
110
103
175
283
F

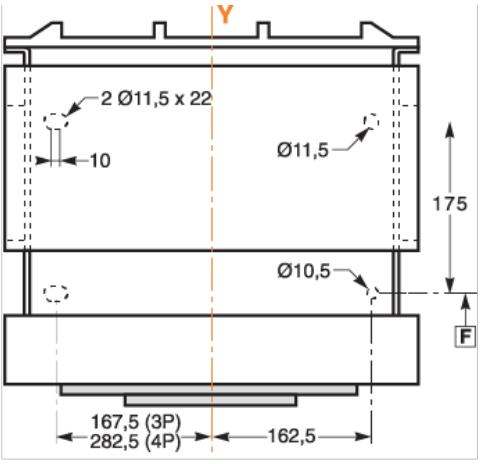
Y
2 Ø11,5 x 22
10
Ø11,5
175
Ø10,5
F
167,5 (3P)
282,5 (4P)
162,5