# Product data sheet

Specifications



## switch disconnector, EacyPact MVS, 2000A, 50kA, 3 Poles, EDO, 240VAC, W/O, PROT, drawout electrical

MVS20N3NW0D

## Main

| | |
|---|---|
| **Range of product** | EasyPact MVS |
| **Range** | EasyPact |
| **Product name** | MVS20NA |
| **Device short name** | MVS20NA |
| **Product or component type** | Switch disconnector |
| **Device application** | Distribution |
| **Poles description** | 3P |
| **Network type** | AC |
| **Suitability for isolation** | Yes conforming to IEC 60947-2 |
| **Utilisation category** | AC-23A |

## Complementary

| | |
|---|---|
| **Network frequency** | 50/60 Hz |
| **Control type** | Electrically operated |
| **Mounting mode** | Drawout |
| **Mounting support** | Rail<br>Base plate |
| **Connection position** | Horizontal<br>Vertical |
| **Location of connection** | Rear |
| **[Ie] rated operational current** | AC-23A: 2000 A AC 50/60 Hz 690 V |
| **Rated duty** | Continuous |
| **[Ui] rated insulation voltage** | 1000 V AC 50/60 Hz conforming to IEC 60947-3 |
| **[Uimp] rated impulse withstand voltage** | 12 kV conforming to IEC 60947-3 |
| **[Icw] rated short-time withstand current** | 50 kA during 1 s conforming to IEC 60947-3 at -5…70 °C<br>25 kA during 3 s conforming to IEC 60947-3 at -5…70 °C |
| **[Icm] rated short-circuit making capacity** | 105 kA AC at 50/60 Hz |
| **[Ue] rated operational voltage** | 690 V AC 50/60 Hz conforming to IEC 60947-3 |
| **Contact position indicator** | Yes |
| **Mechanical durability** | 20000 cycles with maintenance conforming to IEC 60947-3<br>10000 cycles without maintenance conforming to IEC 60947-3 |
| **Electrical durability** | AC-23A: 6000000 cycles 440 V AC 50/60 Hz without maintenance conforming to IEC 60947-3<br>AC-23A: 4000000 cycles 690 V AC 50/60 Hz without maintenance conforming to IEC 60947-3 |

Disclaimer: This documentation is not intended as a substitute for and is not to be used for determining suitability or reliability of these products for specific user applications

| | |
|---|---|
| **Connection pitch** | 115 mm without spreader |
| **Height** | 439 mm |
| **Width** | 441 mm |
| **Depth** | 395 mm |
| **Net weight** | 70 kg |

## Environment

| | |
|---|---|
| **Standards** | IEC 60947-3 |
| **Product certifications** | CCS<br>CCC<br>GOST<br>IEC |
| **IP degree of protection** | IP40 |
| **Pollution degree** | 4 conforming to IEC 60664-1 |
| **Ambient air temperature for operation** | -5…70 °C |
| **Ambient air temperature for storage** | -40…85 °C without control unit |

## Packing Units

| | |
|---|---|
| **Unit Type of Package 1** | PCE |
| **Number of Units in Package 1** | 1 |
| **Package 1 Height** | 42.0 cm |
| **Package 1 Width** | 35.0 cm |
| **Package 1 Length** | 50.0 cm |
| **Package 1 Weight** | 38.0 kg |

## Contractual warranty

| | |
|---|---|
| **Warranty (in months)** | 18 |

## Environmental Data

Schneider Electric aims to achieve Net Zero status by 2050 through supply chain partnerships, lower impact materials, and circularity via our ongoing “Use Better, Use Longer, Use Again” campaign to extend product lifetimes and recyclability.

Environmental Data explained >

How we assess product sustainability >

### Environmental footprint

| | |
|---|---|
| Total lifecycle Carbon footprint | **6 089 kg CO2 eq.** |
| Carbon footprint of the manufacturing phase [A1 to A3] | **538 kg CO2 eq.** |
| Carbon footprint of the distribution phase [A4] | **21 kg CO2 eq.** |
| Carbon footprint of the installation phase [A5] | **17 kg CO2 eq.** |
| Carbon footprint of the use phase [B2, B3, B4, B6] | **5 391 kg CO2 eq.** |
| Carbon footprint of the end-of-life phase [C1 to C4] | **122 kg CO2 eq.** |
| Environmental Disclosure | Product Environmental Profile |

## Use Better

### Materials and Substances

| | |
|---|---|
| Packaging made with recycled cardboard | **Yes** |
| Packaging without single use plastic | **No, we have minimized the use of plastic in the packaging in compliance with regulations and considering quality and safety standards** |
| SCIP Number | **3f2d539a-6ab5-46aa-8603-9354f4ae3294** |
| EU RoHS Directive | Compliant By Exemption |
| REACh Regulation | Reference contains Substances of Very High Concern above the threshold |
| PVC free | **Yes** |

## Use Again

### Repack and remanufacture

| | |
|---|---|
| End of life manual availability | End of Life Information |
| Take-back | **No** |
| WEEE Label | **The product must be disposed on European Union markets following specific waste collection and never end up in rubbish bins** |

Dimensions Drawings

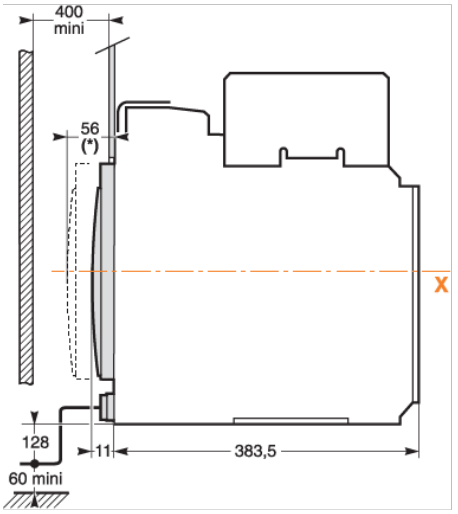


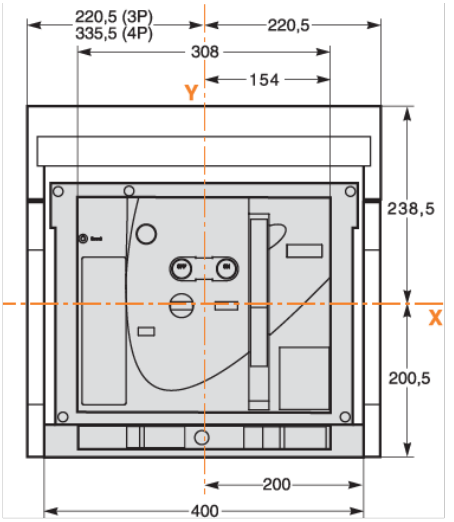

Assembly

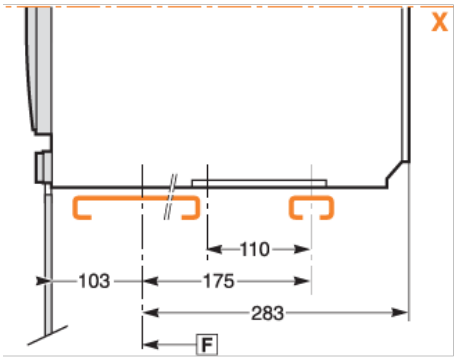
X
110
103
175
283
F

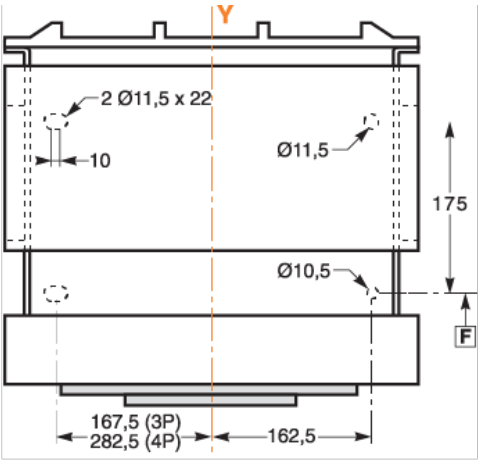
Y
2 Ø11,5 x 22
10
Ø11,5
175
Ø10,5
F
167,5 (3P)
282,5 (4P)
162,5