Product data sheet

Specifications



switch disconnector, EacyPact MVS, 4000A, 55kA, 3 Poles, MDO, W/O, PROT, drawout, manual

MVS40N3MW0D

Main

Range of product	EasyPact MVS
Range	EasyPact
Product name	MVS40NA
Device short name	MVS40NA
Product or component type	Switch disconnector
Device application	Distribution
Poles description	3P
Network type	AC
Suitability for isolation	Yes conforming to IEC 60947-2
Utilisation category	AC-23A

Complementary

Network frequency	50/60 Hz
Control type	Manually operated
Mounting mode	Drawout
Mounting support	Base plate Rail
Connection position	Horizontal Vertical
Location of connection	Rear
[Ie] rated operational current	AC-23A: 4000 A AC 50/60 Hz 690 V
Rated duty	Continuous
[Ui] rated insulation voltage	1000 V AC 50/60 Hz conforming to IEC 60947-3
[Uimp] rated impulse withstand voltage	12 kV conforming to IEC 60947-3
[Icw] rated short-time withstand current	55 kA during 1 s conforming to IEC 60947-3 at -5…70 °C 30 kA during 3 s conforming to IEC 60947-3 at -5…70 °C
[Icm] rated short-circuit making capacity	121 kA AC at 50/60 Hz
[Ue] rated operational voltage	690 V AC 50/60 Hz conforming to IEC 60947-3
Contact position indicator	Yes
Mechanical durability	20000 cycles with maintenance conforming to IEC 60947-3 10000 cycles without maintenance conforming to IEC 60947-3
Electrical durability	AC-23A: 5000000 cycles 440 V AC 50/60 Hz without maintenance conforming to IEC 60947-3 AC-23A: 2500000 cycles 690 V AC 50/60 Hz without maintenance conforming to IEC 60947-3

Disclaimer: This documentation is not intended as a substitute for and is not to be used for determining suitability or reliability of these products for specific user applications

Connection pitch	115 mm without spreader
Height	439 mm
Width	441 mm
Depth	395 mm
Net weight	90 kg

Environment

Standards	IEC 60947-3
Product certifications	GOST CCC IEC CCS
IP degree of protection	IP40
Pollution degree	4 conforming to IEC 60664-1
Ambient air temperature for operation	-5…70 °C
Ambient air temperature for storage	-40…85 °C without control unit

Packing Units

Unit Type of Package 1	PCE
Number of Units in Package 1	1
Package 1 Height	42.0 cm
Package 1 Width	35.0 cm
Package 1 Length	50.0 cm
Package 1 Weight	38.0 kg

Contractual warranty

Warranty (in months)	18

Environmental Data

Schneider Electric aims to achieve Net Zero status by 2050 through supply chain partnerships, lower impact materials, and circularity via our ongoing “Use Better, Use Longer, Use Again” campaign to extend product lifetimes and recyclability.

Environmental Data explained >

How we assess product sustainability >

Environmental footprint

Total lifecycle Carbon footprint	**11 204 kg CO2 eq.**
Carbon footprint of the manufacturing phase [A1 to A3]	**679 kg CO2 eq.**
Carbon footprint of the distribution phase [A4]	**27 kg CO2 eq.**
Carbon footprint of the installation phase [A5]	**22 kg CO2 eq.**
Carbon footprint of the use phase [B2, B3, B4, B6]	**10 323 kg CO2 eq.**
Carbon footprint of the end-of-life phase [C1 to C4]	**154 kg CO2 eq.**
Environmental Disclosure	Product Environmental Profile

Use Better

Materials and Substances

Packaging made with recycled cardboard	**Yes**
Packaging without single use plastic	**No, we have minimized the use of plastic in the packaging in compliance with regulations and considering quality and safety standards**
SCIP Number	**3f2d539a-6ab5-46aa-8603-9354f4ae3294**
EU RoHS Directive	Compliant By Exemption
REACh Regulation	Reference contains Substances of Very High Concern above the threshold
PVC free	**Yes**

Use Again

Repack and remanufacture

End of life manual availability	End of Life Information
Take-back	**No**
WEEE Label	**The product must be disposed on European Union markets following specific waste collection and never end up in rubbish bins**

Dimensions Drawings

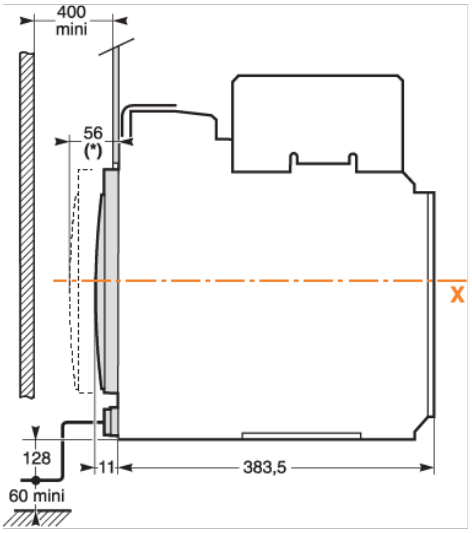

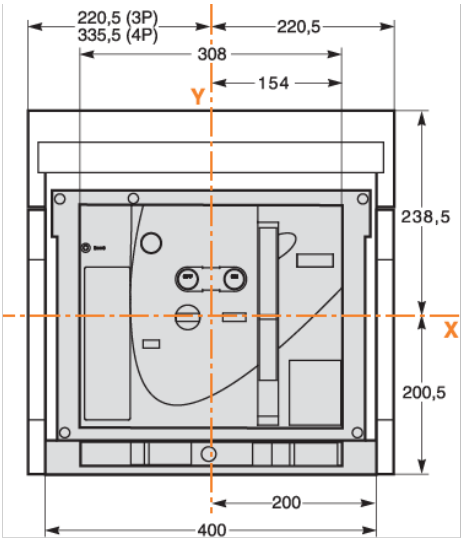

Assembly

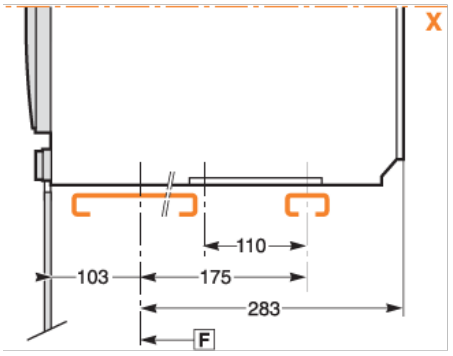
X
110
103
175
283
F

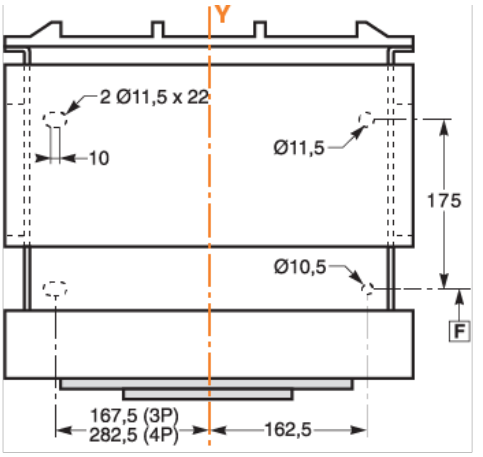
Y
2 Ø11,5 x 22
10
Ø11,5
175
Ø10,5
F
167,5 (3P)
282,5 (4P)
162,5