PowerLogic™ A3

Arc Flash Protection Unit

User Manual

09/2025

Version: A3/EN M/01D



Schneider Electric

www.se.com

Legal Information

The information provided in this document contains general descriptions, technical characteristics and/or recommendations related to products/solutions.

This document is not intended as a substitute for a detailed study or operational and site-specific development or schematic plan. It is not to be used for determining suitability or reliability of the products/solutions for specific user applications. It is the duty of any such user to perform or have any professional expert of its choice (integrator, specifier or the like) perform the appropriate and comprehensive risk analysis, evaluation and testing of the products/solutions with respect to the relevant specific application or use thereof.

The Schneider Electric brand and any trademarks of Schneider Electric SE and its subsidiaries referred to in this document are the property of Schneider Electric SE or its subsidiaries. All other brands may be trademarks of their respective owner.

This document and its content are protected under applicable copyright laws and provided for informative use only. No part of this document may be reproduced or transmitted in any form or by any means (electronic, mechanical, photocopying, recording, or otherwise), for any purpose, without the prior written permission of Schneider Electric.

Schneider Electric does not grant any right or license for commercial use of the document or its content, except for a non-exclusive and personal license to consult it on an "as is" basis.

Schneider Electric reserves the right to make changes or updates with respect to or in the content of this document or the format thereof, at any time without notice.

To the extent permitted by applicable law, no responsibility or liability is assumed by Schneider Electric and its subsidiaries for any errors or omissions in the informational content of this document, as well as any non-intended use or misuse of the content thereof.

Table of Contents

Table of Contents 3
1 Legal notice 7
2 General information 8
Trademarks 8
Purpose 8
Safety information 9
User qualification 10
Certification and declaration 10
Abbreviations 10
3 Introduction 11
Range description 11
Selection guide 12
User interface 12
Three kinds of operation mode 14
4 Use 21
Introduction and rules 21
Protection Schemes 23
Typical use case 31
A3F6P 31
A3F12P 35
A3S6P 37
A3S12P 40
Application examples 41
Non-selective 41
Partially Selective 42
Completely selective 43
I/O peripheral mode application 44
Modbus register and LN of IEC 61850 46
Supporting functions 48
Test mode 48
Self-supervision 49
System supervision 50
Self-diagnosis signals about PowerLogic A3 in V321 51
Connection 52
Connector terminals 52
ix Industrial® port 54
5 Installation 56
Safety instructions 56
Transport, handling and storage 57
Transport 57
Handling 58
Storage 58
Unpacking 58
Equipment receipt 58
Package contents 59
Equipment identification 59
Operating environment 61

Dimensions 61
Mounting 62
DIN rail mounting 62
Panel mounting 63
Grounding 66
Install the arc sensors 67
VA 1 DA arc flash sensor 68
VA 1 EH 70
6 Configuration 71
Introduction of configuration methods 71
Configure with rotary switch and push button 71
Configure with eSetup Easergy Pro directly 72
Overview 72
Operation modes 73
Set up the connection 74
User accounts 74
Password recovery 75
Parameters and commands 76
Steps of configuration 81
Configure with ArcEM Configurator in V321 82
ARC ArcEM Unit Configurator 83
ARC ArcEM Bus 83
Configuring arc protection settings of the V321 86
Arc matrix – light 87
Arc matrix – output 88
Arc event enabling 89
7 Technical data 91
Technical characteristics 91
Environmental characteristics 93
8 Commissioning and testing 97
Setting up the arc flash protection system 97
Commissioning and testing 98
Checking the sensor installation 98
Checking schemes and light groups 99
Configuring the PowerLogic A3 to test mode 99
Sensor testing 99
Testing the connected sensors and verifying the LEDs 100
Testing the inter-tripping and verifying the LEDs 100
Testing the sensor’s self-supervision 101
Testing the supervision of PowerLogic A3 devices 102
Filling in the test report 103
9 Maintenance 104
Preventative maintenance 104
Periodical testing 104
Hardware cleaning 104
Sensor condition and positioning check 105
System status messages 105
Troubleshooting 105
Returning for expert assessment 106
End of life 106

10 Order information 107
11 Revision history 109

1 Legal notice

Copyright

2023 Schneider Electric. All rights reserved.

Disclaimer

No responsibility is assumed by Schneider Electric for any consequences arising out of the use of this document. This document is not intended as an instruction manual for untrained persons. This document gives instructions on device installation, commissioning and operation. However, the manual cannot cover all conceivable circumstances or include detailed information on all topics. In the event of questions or specific issues, contact Schneider Electric and request the necessary information.

Contact information

35 rue Joseph Monier
92506 Rueil-Malmaison
FRANCE
Phone: +33 (0) 1 41 29 70 00
Fax: +33 (0) 1 41 29 71 00
www.se.com

2 General information

Trademarks

QR Code is a registered trademark of DENSO WAVE INCORPORATED in Japan and other countries.

Purpose

This user manual is intended for people who are experts on electrical power engineering, panel builders, commissioning engineers, and experienced users, communication specialists or general users of the PowerLogic™ A3 arc flash protection unit (the PowerLogic A3).

The complete manual is arranged as follows:

- Preliminary sections, with the details of the manual (how to use it, glossary) and technical data.
- Functions of the PowerLogic A3.
  Explanations, diagrams and settings of the protection, control, monitoring and maintenance, measurement, recording and programmable logic functions are detailed in these sections.
- Installation and commissioning.
- User interface use, troubleshooting and maintenance instructions.

The following documents complete this manual:

- Quick Start Guide, delivered in the device package, summarizes instructions for installation.

We welcome your comments about this document. You can reach us by contacting Customer Care Center Contact page:
www.se.com/CCC

Safety information

Important information

Read these instructions carefully and look at the equipment to become familiar with the device before trying to install, operate, service or maintain it. The following special messages may appear throughout this manual or on the equipment to warn of potential hazards or to call attention to information that clarifies or simplifies a procedure.



The addition of this symbol to a "Danger" or "Warning" safety label indicates that an electrical hazard exists which will result in death or serious injury if the instructions are not followed.



This is the safety alert symbol. It is used to alert you to potential personal injury hazards. Obey all safety messages that follow this symbol to avoid possible injury or death.

⚠⚠DANGER

DANGER indicates an imminently hazardous situation which, if not avoided, will result in death or serious injury.

Failure to follow these instructions will result in death or serious injury.

⚠WARNING

WARNING indicates a potentially hazardous situation which, if not avoided, can result in death or serious injury.

Failure to follow these instructions can result in death, serious injury, or equipment damage.

⚠CAUTION

CAUTION indicates a potentially hazardous situation which, if not avoided, can result in minor or moderate injury, or equipment damage.

Failure to follow these instructions can result in injury or equipment damage.

NOTICE

NOTICE is used to address practices not related to physical injury.

Failure to follow these instructions can result in equipment damage.

User qualification

Electrical equipment should be installed, operated, serviced, and maintained only by qualified personnel. No responsibility is assumed by Schneider Electric for any consequences arising out of the use of this material. A qualified person is one who has skills and knowledge related to the construction, installation, and operation of electrical equipment and has received safety training to recognize and avoid the hazards involved.

Use the password protection feature to help prevent untrained and non-authorized personnel interacting with the PowerLogic A3.

Certification and declaration

Item	Standard	Description
CE European Commission's directives	EN IEC 60255-26	Electromagnetic Compatibility Directive (EMCD) 2014/30/EU
	EN IEC 60255-27	Low Voltage Directive (LVD) 2014/35/EU
	EN IEC 63000	Restriction of the Use of Certain Hazardous Substances in Electrical and Electronic Equipment (ROHS) Directive 2015/863/EU
UK CA United Kingdom regulations	BS EN 60255-26	Electromagnetic Compatibility (EMC) Regulations SI 2016 No. 1091.
	BS EN 60255-27	Electrical Equipment (Safety) Regulations SI 2016 No. 1101
	BS EN IEC 63000	Restriction of the Use of Certain Hazardous Substances in Electrical and Electronic Equipment (ROHS) Regulations SI 2012 No. 3032

Abbreviations

Table 1 - Abbreviations used in the manual

Acronyms	Indication
ac	Alternating current
AEM	Arc Extensional Modular in V321 Slot 6, for the connection from PowerLogic A3 devices to V321.
ANSI	American National Standards Institute. A standardization organization.
AWG	American wire gauge
CB	Circuit breaker
dc	Direct current
DI	Digital input
DO	Digital output, output relay
EP	Configuration tool eSetup Easergy Pro
HSO	High speed output
IED	Intelligent electronic device
LED	Light-emitting diode
USB	Universal Serial Bus
V321	Central unit for V321 arc flash protection
WD	Watchdog

3 Introduction

Range description

The arc flash detection system operates as a complement of the protection relays. It helps to ensure rapid operation in case of arc flash incident where other protection schemes (for example, overcurrent) operates not quick enough.

The PowerLogic A3 range is designed for the customer application of mitigating the arc flash fault inside MV or LV cubicle and operates with the switching device with an accessible control input.

The naming rule of PowerLogic A3 range is shown as below:

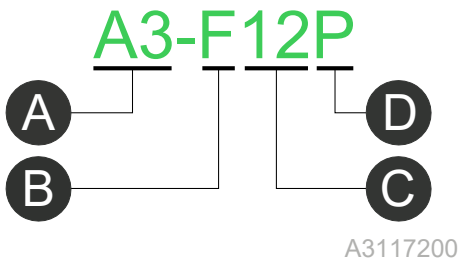

A3117200

A	Range name: PowerLogic A3	B	Device form factor • F: Full size with power supply • S: Small size without power supply
C	Number of sensor channels: • 4: 4 sensors • 6: 6 sensors • 12: 12 sensors	D	Type of sensors: • P: light point sensors • C: current sensors • L: fiber loop sensors • X: mixed type sensors

The PowerLogic A3 range is composed by A3F6P, A3F12P, A3S6P and A3S12P to perform a high-density light detection up to 6 or 12 point-sensors per device. ArcEM card of V321 is also released for current confirmation and light information transmission.

The A3F series is equipped with a power supply card, therefore the A3F can operate independently to provide arc flash protection for bay-based simple system. Beside that, the A3F is capable to inter-operate with other PowerLogic A3 devices to form a small arc protection system for multi-bay system. It can be associated to other PowerLogic A3 devices to increase the number of light sensor channels and tripping outputs for multi-bay system. Depends on the number of cubicles, the groups to be protected and the number of circuit breakers to be controlled, the protection system designer can select up to 5 devices to build the suitable solution.

The A3S series is not equipped with power supply card, it shall be powered by A3F with ArcEM cable. So, it is used as only a part of arc protection system.

Both A3F and A3S series are capable to operate with V321 equipped with an ArcEM card in slot 6. Up to 16 PowerLogic A3 devices can be connected to the system to form a large arc protection system for the complex system.

The main features of PowerLogic A3 are as blow:

- Event memory, LED indication memory in case of main loss.
- Operation on both light only mode and light with current confirmation mode are supported.
- Maximum 2 ms operation time for T1 and T3 (HSO), 9 ms operation time for T2 (conventional output relay) in light only mode.
- Full system self-supervision.
- Independent sensor LED for status detection and fault location.

- Wide range of auxiliary power supply for A3F: 24 to 240 V ac/dc.
- 2 equivalent ix Industrial® ports for network and power supply for A3S.
- Strong extensibility, support up to 5 PowerLogic A3 devices in small system, up to 16 PowerLogic A3 devices when being connected to V321.
- Meet multiple application scenarios by choosing different Protection Scheme, such as Incomer, Feeder, busbar, and so on.
- Meet the requirements of selectivity by defining Light Groups from 1 to 12 and Current Groups from 13 to 16.
- Internal signal transmission protocol in ArcEM bus with higher level of security.
- Test mode for sensor channels commissioning without output of physical relay trip.

Selection guide

Table 2 - PowerLogic A3 selection guide

PowerLogic A3	A3F6P	A3F12P	A3S6P	A3S12P
Number of channels of input sensor	6	12	6	12
Type of input sensors	Light Point Sensor			
Protection schemes	Non-selective, Incomer, Feeder	Non-selective, Incomer, Feeder	Non-selective, Feeder	Non-selective
Output relays	T1 / T2 / T3	T1 / T2	T3	N/A
Watchdog outputs	T4	N/A	T4	N/A
External power supply	Yes		N/A	
Size (Width x Height x Depth)	70.6 x 134.4 x 126.2 mm / 2.78 x 5.29 x 4.97 in		34 x 134.4 x 125.1 mm / 1.34 x 5.29 x 4.92 in	

NOTE: T1 and T3 are HSO contacts. T2 is conventional contact. T4 is used for WD.

User interface

There are two sizes of PowerLogic A3: the full size A3F and the small size A3S. The 2 sizes looks quite similar. Here we can take the A3F6P as an example:

Figure 1 - The user interface of PowerLogic A3F6P

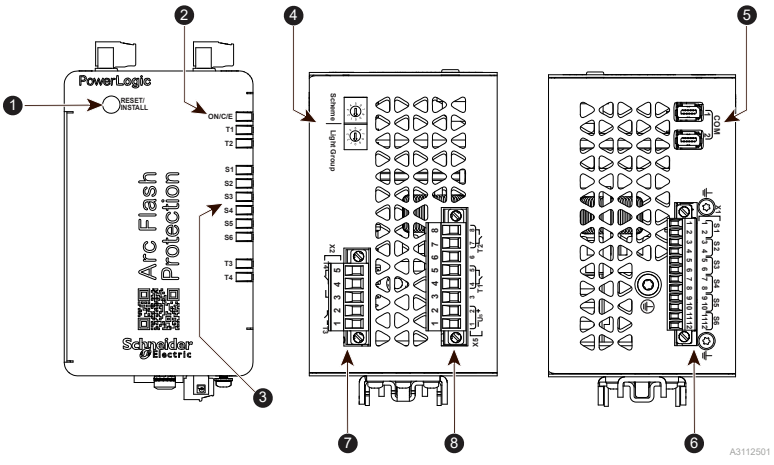

No.	Item	Description
1	Reset/install button	• Release sensor LED and output relay by short press. • Install local sensors and send install command to other PowerLogic A3 devices in the system by long press: Press and hold this button for 3~5 s until the ON/C/E LED lights in orange. Wait for 5 s, all sensor LEDs will flash in yellow. • Enter the test mode: Press and hold this button for 3 s, the ON/C/E LED flashes in orange. Press and hold 3 s again during flash, then the ON/C/E LED light become steady in orange. See Test mode, page 48 for details.
2	Operating status indication LED	• Green: normal status of the device. • Red: abnormal status of the device due to sensor errors, parameter changed without install, system structure changed and so on. See Troubleshooting, page 105. • Orange, steady: test mode of the device. • Orange, blinking: the device is on hold before implementing the install command. Wait for 5 s if you want to implement the install command, or short press the button to cancel if you do not want to install. The LED is green in normal operation status. **NOTE:** If the PowerLogic A3 is working in system mode or IO mode which means there are messages transmitting in the ArcEM bus, the LED will be blinking.
3	Sensor and trip output status LED	• T1, T2, T3, T4 LEDs correspond to the output relays of the device. But the output relays will reset automatically if they are not set to latched, the LEDs will keep lit until release manually. The light is Red when activated. • S1 to S6 or S12 LEDs correspond to the sensor channels of the device. These LEDs indicate the sensor status: ◦ The color is Yellow steady and keep lit when sensor activated until release manually. ◦ The light of LEDs will become Yellow blinking when the sensor status is error, for example, uninstall (sensor newly added without install), disconnected (sensor lost), daylight error, overcurrent (sensor short circuit). During normal operation, these LEDs are all deactivated.
4	Rotary configuration switches	Select the scheme and light group. See Configure with rotary switch and push button, page 71 for details.
5	Com 1 / Com 2	2 equivalent ix Industrial® ports for connecting PowerLogic A3 device by ArcEM cable. This port is also the interface for configuring the device by eSetup Easergy Pro with Config ArcEM cable REL52960.
6, 7, 8	X1, X2, X5	Connectors for sensors, output relays and auxiliary power supply. There are labels to indicate the pins' function.

The small sized PowerLogic A3 device is not equipped with power supply card, it is powered from ix Industrial® port by the ArcEM cable which is connect to full sized PowerLogic A3 device. The A3S is about half size of A3F and without Reset/ Install button. For this reason, A3S can not work alone, it can be considered as an extension of A3F.

Figure 2 - PowerLogic A3S6P user interface

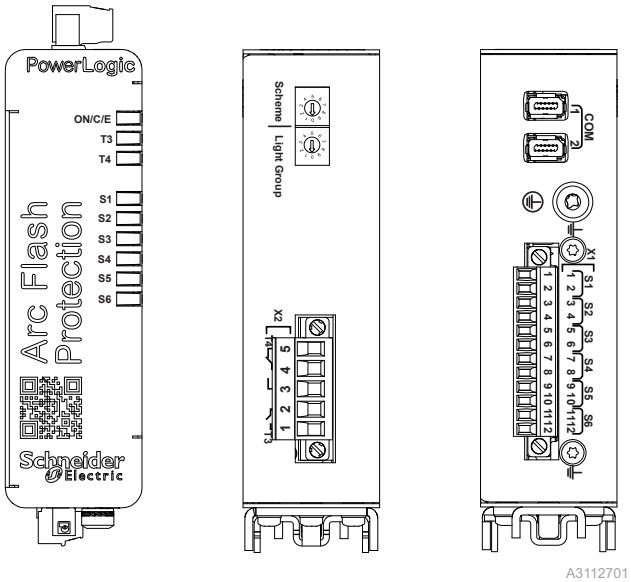

Three kinds of operation mode

The PowerLogic A3 brings a certain flexibility to fit to different customer applications. The modular design of the PowerLogic A3 allows the user to design an arc flash protection solution adapted to the installation design and protection objectives.

For the simple power system, single PowerLogic A3 device can meet the requirement. For a complex power system, the arc protection system shall be formed by multiple devices. Furthermore, PowerLogic A3 can be connected to V321 through its ArcEM card in slot 6. In this case, up to 16 PowerLogic A3 devices cascaded with V321 build up a large arc protection system for multiple sections busbar, multiple incomers, and couplings power system.

Using a single PowerLogic A3 device or combining multiple units depends on the factors below:

- The number of groups (which is exactly the same concept as Zone 1 to 4 in Schneider Electric‘s legacy products, for example VAM10L, VAM12L) to protect;
- The number of sensors to deploy;
- The number of output relays to trip the circuit breaker;
- The application scenarios: selectivity/non-selectivity, with/without current confirmation, incomer/feeder.

According to the scale of the arc protection system which is composed by the PowerLogic A3 devices, three kinds of operation mode is defined as below:

- **Stand-alone mode**: also called single unit mode, full size PowerLogic A3 device equipped with a power supply card operates independently, no communication function.
- **System mode**: not more than **5** PowerLogic A3 devices form a small system. The system is powered by A3F devices, the A3S devices are powered by ArcEM cable. Internal messages containing status of Groups, reset and install commands are transmitted by the ArcEM bus.
- **I/O peripheral mode**: builds up an arc protection system with V321 device, as an alternative of some Schneider Electric products such as VAM10L, VAM12L and so on with more flexible and versatile to meet various application scenarios.

Stand-alone mode

Only full size PowerLogic A3 devices can be used as stand-alone detection in MV and LV applications. Based on the number of sensors to be deployed and the number of circuit breakers to trip to isolate arc fault, there are 2 kinds of A3F devices available:

- **A3F6P**, **6** sensor channels, **2** HSO output relays (T1 & T3) and **1** conventional output relay (T2), SF output relay (T4).
- **A3F12P**, **12** sensor channels, **1** HSO output relay (T1) and **1** conventional output relay (T2), without SF output relay (T4).

Since A3F6P and A3F12P are without current confirmation, they use only light criteria.

Possible application scenarios are as listed below:

- **Non-selectivity**, open the main circuit breaker directly if the arc flash occurs in DC/AC power inverter, or If the arc flash occurs in the entire busbar section of single incomer or single busbar section, as shown below:

Figure 3 - A3F12P scheme #1

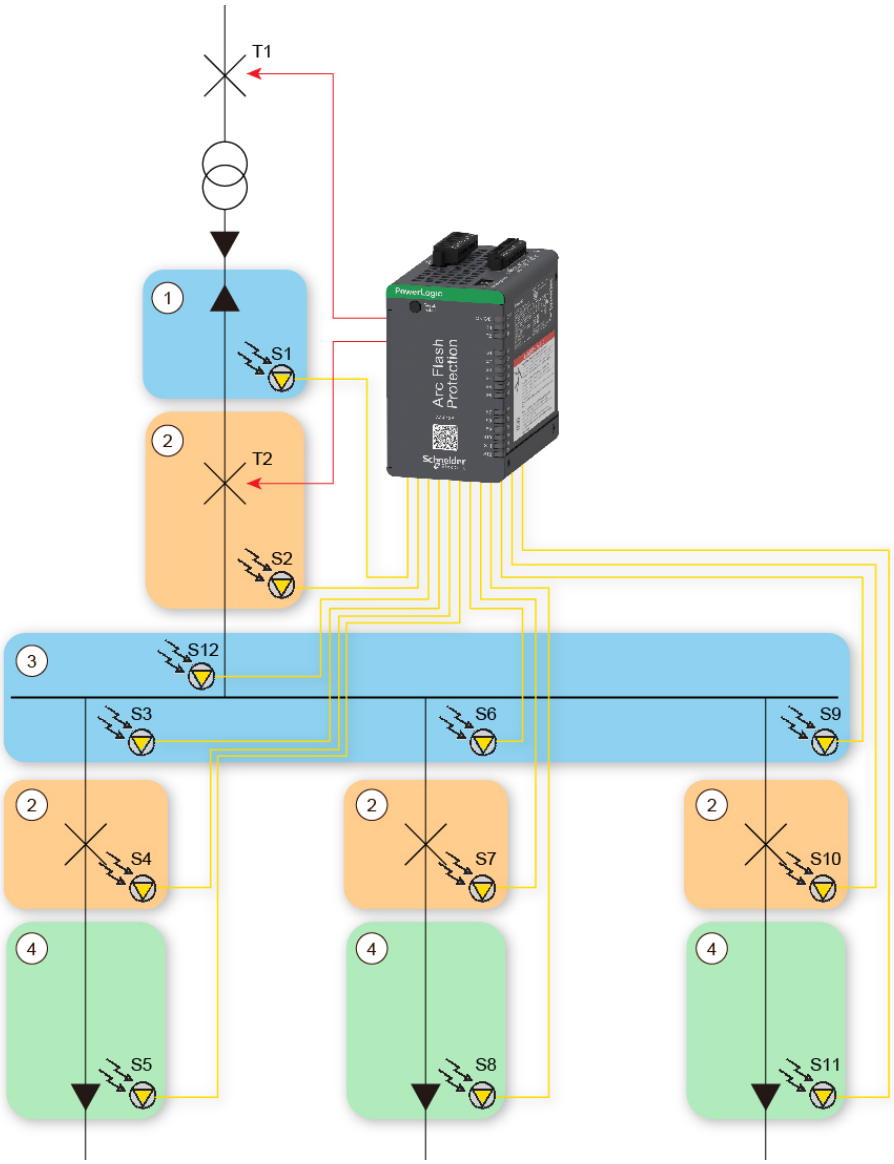

T1	HSO to trip remote/upstream CB	T2	Conventional relay for either local CB tripping or remote signaling, for example, SCADA.
1	Cable	2	CB
3	Busbar	4	Cable

- **Selectivity**, if there are 2 feeders connected to a short busbar, scheme #4 can achieve certain selectivity as shown below:

Figure 4 - A3F6P scheme #4

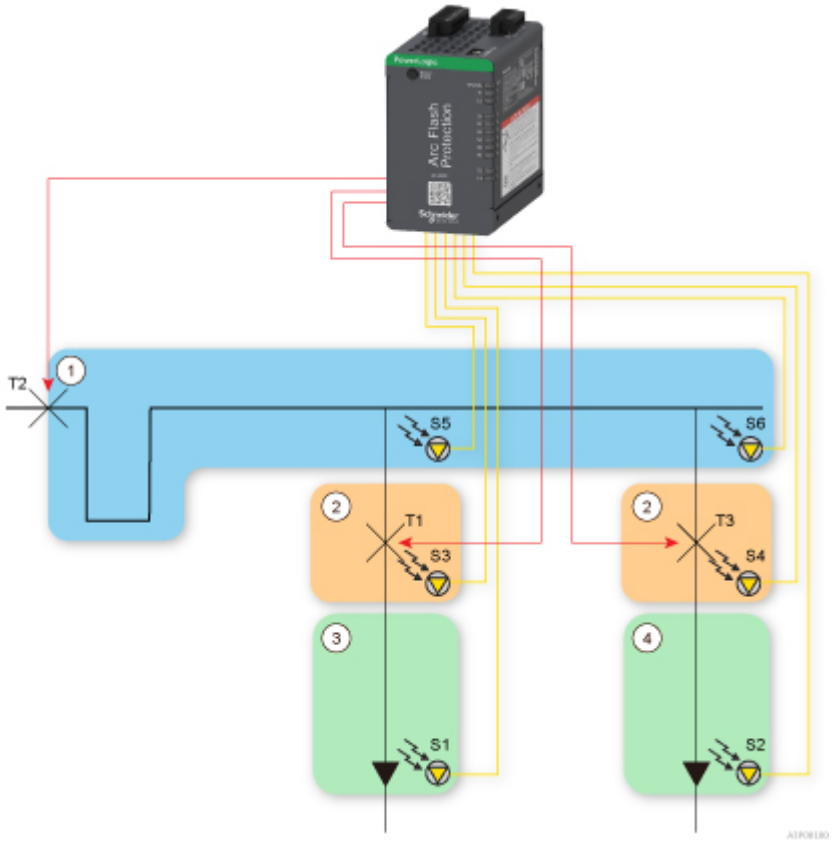

T1	HSO to trip feeder CB x	T2	Conventional relay to trip incomer or remote signalization
T3	HSO to trip feeder CB y	T4	Self diagnosis
1	Busbar	2	CB
3	Cable		

System mode

An arc protection system of not more than **5** PowerLogic A3 devices can be built up by connecting the PowerLogic A3 devices with dedicated ArcEM cables. This arc protection system contains maximum 60 sensors and 10 output relays, can be used in variant applications.

There are some limitations to pay attention of:

- Each A3S shall be cascaded to a A3F device considering the limited capacity of power card in A3F. It means the cascade rule is -F-S-F-S-, S can’t be connected to S. So, at least 2 full size PowerLogic A3 devices are needed when the system scale is 5 or 3.
- The total cable length in the system shall be less than 100 m and the maximum length between two adjacent PowerLogic A3 devices is 30 m.

The image below is an example of PowerLogic A3 small system:

Figure 5 - Example of PowerLogic A3 small system

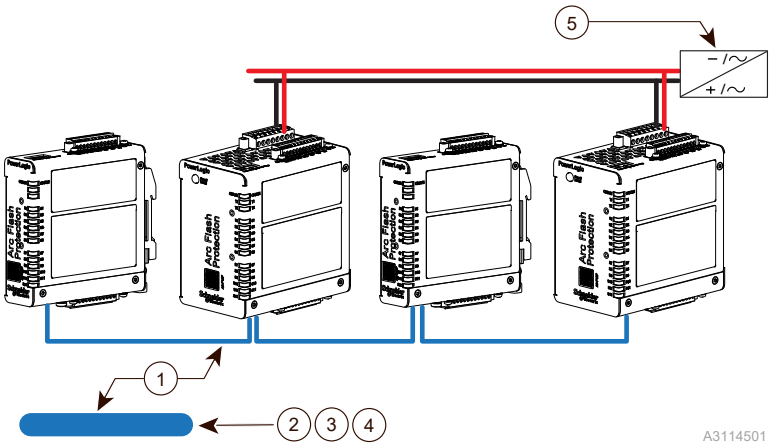

1	Communication cable	2	ArcEM bus
3	Power supply +24 V	4	GND
5	24...240 V ac/dc (-20%...+10%)		

The small system can protect the single main and outgoing feeders or protect the double main and bus-tie feeder with limited number of outgoing feeders. Both architectures can be done with or without selectivity principle by selecting corresponding protection schemes. See chapter Use, page 21.

⚠CAUTION

EQUIPMENT DAMAGE

Do not connect modular cables in a closed loop.

Failure to follow these instructions can result in injury or equipment damage.

NOTICE

EQUIPMENT DAMAGE

- Only the dedicated communication cable specified by Schneider shall be used for connecting the PowerLogic A3 and the V321.
- Modular cable wiring shall be placed on the control cabling trays as far from the primary cable, bus bar and bus ducts as possible.
- Do not connect any other Ethernet network. Only PowerLogic A3 and V321 network can be connected to the Arc Extension Module (EM) bus.
- Connected with an external power supply unit, a PowerLogic A3F unit is capable of providing the operating power supply for only one PowerLogic A3S unit through the communication cable.
- The PowerLogic A3S device can not be operational if it is not connected to the PowerLogic A3F device.

Failure to follow these instructions can result in equipment damage.

I/O peripheral mode

PowerLogic A3 devices can be used as peripheral I/O units of V321 central unit which is used for more advanced and sophisticated arc protection systems. It is not simply device substitute of Schneider Electric's legacy products, for example VAM10L, VAM12L and so on, but more likely the solution substitute which is more flexible and versatile to meet various application scenarios.

The interconnection between PowerLogic A3 and V321 is made with the dedicated communication cable through the ArcEM interface card of V321 in Slot 6 , as shown below:

Figure 6 - The ArcEM interface card of V321 in Slot 6

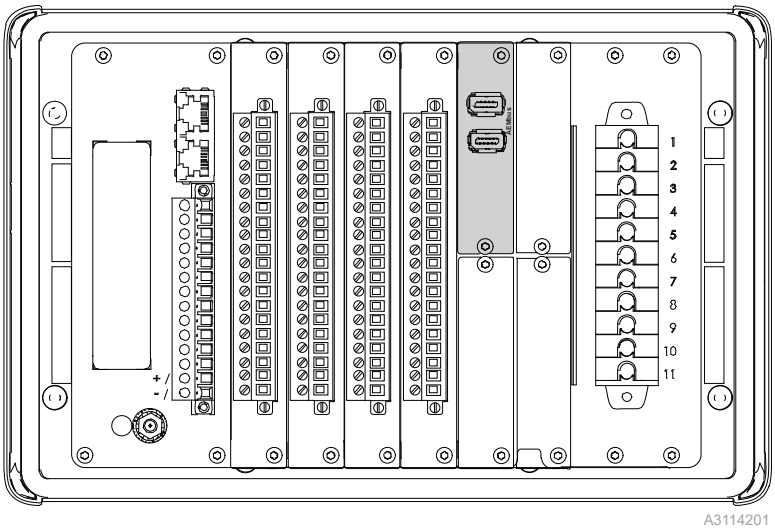

There are 2 equivalent ix Industrial® connectors in ArcEM card. They are the same with COM1 and COM2 ports in PowerLogic A3 device. The ArcEM card of V321 can be considered as a special small size PowerLogic A3 device without auxiliary power supply. Therefore, the A3F is essential in this mode. For PowerLogic A3, the cascading principle is also one A3F device followed by one A3S and each A3F device shall be powered. The system supports maximum **16** PowerLogic A3 devices cascade and the maximum total length of the ArcEM cable is **100 m** (adjacent ArcEM devices should be within 30 m). Below is the example of V321-PowerLogic A3 system topology. Users can also connect PowerLogic A3 into two branches based on the on-site situation.

Figure 7 - Example of V321-PowerLogic A3 system, one branch, …S-F-S-F-S-F… and all full size devices are powered

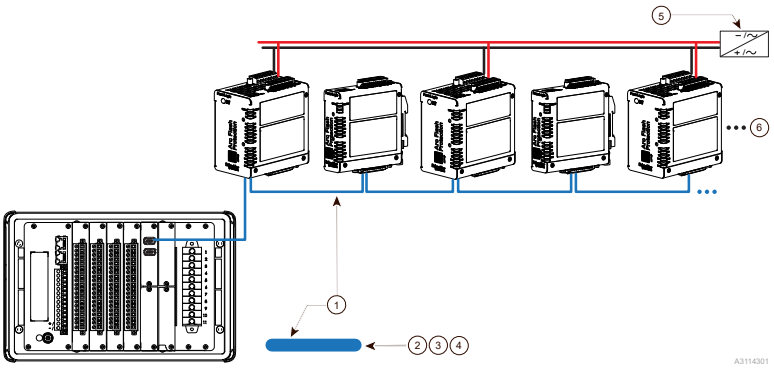

1	Communication cable	2	ArcEM bus
3	Power supply +24 V	4	GND
5	24...240 V ac/dc (-20%...+10%)	6	Up to 16 PowerLogic A3 devices cascade

Figure 8 - Example of V321-PowerLogic A3 system, two branches

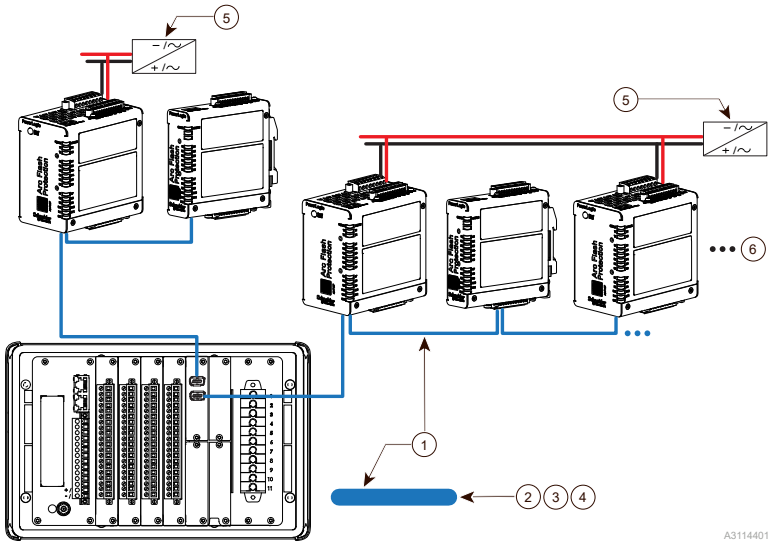

1	Communication cable	2	ArcEM bus
3	Power supply +24 V	4	GND
5	24...240 V ac/dc (-20%...+10%)	6	Up to 16 PowerLogic A3 devices cascade

⚠CAUTION

UNEXPECTED OPERATION

The Arc EM bus is built following a daisy chain topology. The Arc EM bus can't operate in a loop topology!

Failure to follow these instructions can result in injury or equipment damage.

⚠⚠DANGER

HAZARD OF ELECTRIC SHOCK, EXPLOSION, OR ARC FLASH

- The system integrator is responsible for compliance with all local and national electrical code requirements as well as all other applicable regulations with respect to grounding of all equipment.
- In case of using multiple auxiliary power supplies on different powered devices, the installer shall ensure a proper grounding for the overall system.
- Power supply connection shall be made with a twisted pair cable of a cross-sectional area of at least 1.5 mm^2(AWG16).

Failure to follow these instructions will result in death or serious injury.

4 Use

Introduction and rules

The aim of this chapter is to illustrate and provide explanation of each protection scheme, although the logic is charted by logic diagrams. Typical use cases and application examples are also provided. Before going into the point, the following terminologies are going to be used:

- Local sensors: Sensors which are connected to PowerLogic A3 products
- Remote sensors: Sensors which are connected to adjacent PowerLogic A3 products in the system with ArcEM cables. The remote sensors' signals are shared as generic events through the ArcEM bus.

The image below is an example of protection scheme logic diagram:

Figure 9 - Elements of logic diagram

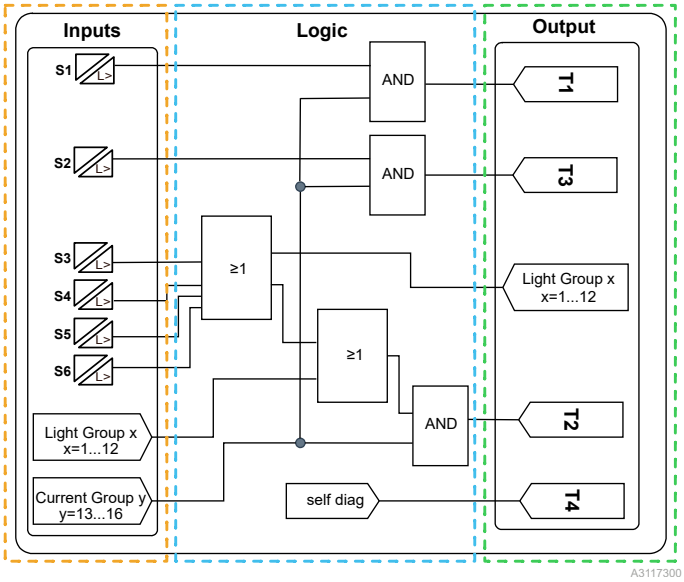

The protection scheme follows these rules:

- There are 3 elements in each protection scheme logic diagram: the inputs, the logic and the outputs
- The inputs include all sensors either local or remote and current condition (if any, according to configured scheme). For example, in the above image, S1 to S6 are used as local sensors. Light group is used as remote sensors from PowerLogic A3 devices and current confirmation condition is used as well. Inputs data flow is defined by "Scheme" rotary switch and "Light Group" rotary switch.
- The outputs include tripping outputs either HSO (T1 &T3) or conventional (T2) and light group which is shared as remote sensors data on the communication bus. Output data acquisition is defined by "Scheme" rotary switch and "Light Group" rotary switch.
- Each PowerLogic A3 device can receive signal from the remote sensors because the signal is published as generic event. The restriction is each PowerLogic A3 can receive this data and execute it in its logic (Scheme) only in case of the "Light Group" setting of the PowerLogic A3 is identical with the sender device. It means the sender and the receiver must have same Light Group settings.

The table below explains briefly the impacts of each rotary switch on 3 different elements of PowerLogic A3 logic diagram:

Table 3 - Rotary switch configuration

Rotary switch	Description
Schemes	• Inputs: impact of “scheme” setting is mostly on which sensor’s data to be pushed to output. For example, in Elements of logic diagram, page 21 local sensor 3 to 6 are pushed to Light Group data which is shared with other PowerLogic A3 devices in the system through bus communication. Also, S1 light data with current condition is pushed to T1 and so on. Moreover, scheme rotary switch configuration defines if current confirmation condition is required or not. For example, in Elements of logic diagram, page 21 the current condition is required. • Logic: it defines selective/non-selective, incomer/feeder logics. For example, in Elements of logic diagram, page 21 we can find that it is selective, S1 trips T1 and S2 trips T3 with current confirmation. The selective & non-selective logics will be explained in detail in the following chapters. • Outputs: the tripping outputs are assigned by local sensor connected to PowerLogic A3, or by the sensors of the same group through communication bus, or by both the local sensor and the sensors of the same group.
Light group	This configuration defines the “Light Group” assignment of input and output element of each single PowerLogic A3 device. If we take an example in witch the light group rotary switch points to 2, it means: • All or group of local sensors, depend on the pre-defined scheme, are pushed to Light Group 2(G2); • The PowerLogic A3 device takes into account only the remote sensor data of exactly the same Light Group 2(G2).

Below table shows different schemes of all PowerLogic A3 units based on covering selectivity/non-selectivity and with/without current confirmation.

Table 4 - PowerLogic A3 models and pre-defined schemes

PowerLogic A3 unit	Non-selective	Non-selective + current	Selective Incomer (Without current)	Selective Feeder (Without current)	Selective Incomer + current	Selective Feeder + current
A3F6P	#1	#2	#3	#4	#5	#6
A3F12P	#1	#2	#3	#4	#5	#6
A3S6P	#1	#2	x	#4	x	#6
A3S12P	#1	x	x	x	x	x

There are 9 available configurations from 1 to 9 for scheme rotary switch. However, the 9 schemes are not all defined in wave 1, refer to PowerLogic A3 models and pre-defined schemes, page 22 for the defined status.

- A3F6P contains 6 schemes.
- A3F12P contains 6 schemes.
- A3S6P contains 4 schemes.
- A3S12P contains 1 scheme.

The selective schemes include 2 sub-schemes defined as Incomer/feeder scheme, the Incomer/Feeder logics will be explained in detail in Protection Schemes, page 23.

NOTE: By default, the value of protection scheme is scheme #1, the value of Light Group is Group 1, the value of Current Group is Group 16. The default positions of the 2 rotary switches are 0 and 0. Users can configure the device by eSetup Easergy Pro or by rotating the switches with screwdriver. (See Configuration, page 71.)

Protection Schemes

Schemes of A3F6P

Table 5 - Schemes of A3F6P

Scheme diagram	Description
Figure 10 - A3F6P Scheme #1 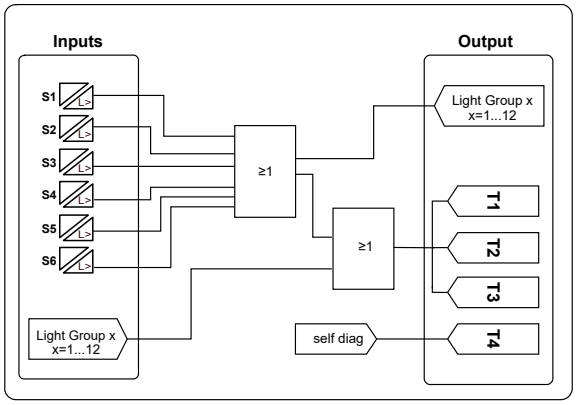	**Non-selective without current confirmation** If the local sensors(S1 to S6) and/ or remote sensors with identical Light Group setting are lit then T1, T2 and T3 will trip. Moreover, all local sensors' (S1 to S6) activation data is pushed to Light Group to share with other PowerLogic A3 devices with identical Light Group setting through communication bus. T4 is a self-diagnosis watchdog of the PowerLogic A3 device and other PowerLogic A3 units in the system.
Figure 11 - A3F6P Scheme #2 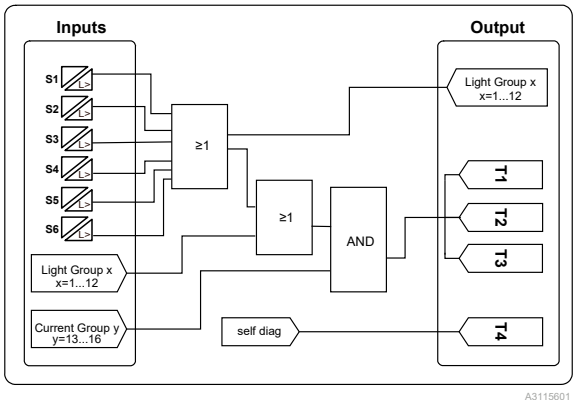	**Non-selective with current confirmation** Same as scheme #1 but with current confirmation added. Moreover, all local sensors' (S1 to S6) activation data is pushed to Light Group to share with other PowerLogic A3 devices with identical Light Group setting through communication bus.
Figure 12 - A3F6P Scheme #3 Incomer 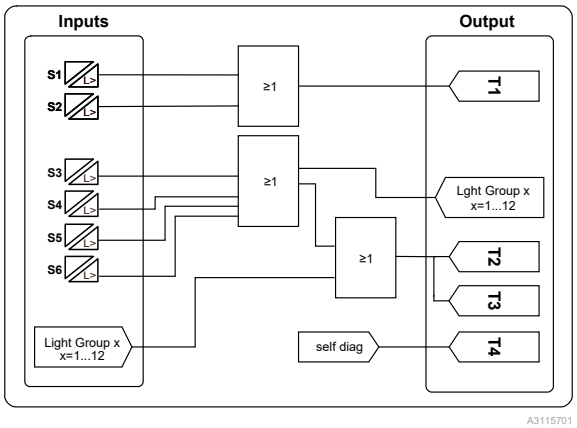	**Selective scheme for Incomer without current** Sensors S1 and/or S2 can be installed in cable and/or circuit breaker compartment. T1, which is a high speed output, trips when S1 and/or S2 are lit without current confirmation, remote inter-tripping signal will also be sent. Sensors S3 to S6 can be installed in incomer's busbar compartment or riser's busbar compartment. T2 is a conventional output relay, and T3 is a high speed output relay, trip when S3 to S6 or remote sensors are lit. T3 can be wired to tripping circuit of Incomer's CB, to be either signaling relay or wired to Coupling's CB (if any). T2 can be either wired to tripping circuit of coupling's CB or to the remote, for example SCADA. Moreover, all local sensors' (S3 to S6) activation data is pushed to Light Group to share with other PowerLogic A3 devices with

Table 5 - Schemes of A3F6P (Continued)

Scheme diagram	Description
	identical Light Group setting through communication bus. T4 is a self-diagnosis watchdog of the PowerLogic A3 device and other PowerLogic A3 units in the system.
Figure 13 - A3F6P Scheme #4 Feeder 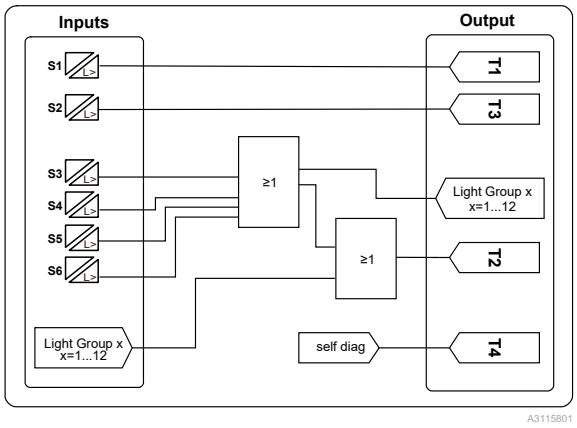 	**Selective scheme for an Outgoing feeder without current** This scheme can cover two outgoing feeders. S1 is installed in cable compartment of outgoing X. T1 trips if S1 is lit. T1 is a HSO, can be wired to tripping circuit of outgoing X's CB. S2 is installed in cable compartment of outgoing Y. T3 trips if S2 is lit. T3 is a HSO, can be wired to tripping circuit of outgoing Y's CB. S3 and S4 are installed in CB's and/or busbar compartment of outgoing X. Moreover, S5 and S6 are installed in CB's and/or busbar compartment of outgoing Y. If S3 to S6 is lit then T2 trips, the trip signal can be sent either to coupling or to remote; Moreover the Light Group is set to ON and sent to other PowerLogic A3 units in the system. The PowerLogic A3 located in Incomer with scheme #3 or #5 receives the light group from this PowerLogic A3 will trip incoming CBs to isolate arc incident located on busbar/CBs on other part of the electrical installation. T4 is a self-diagnosis watchdog of the PowerLogic A3 device and other PowerLogic A3 units in the system.

Table 5 - Schemes of A3F6P (Continued)

Scheme diagram	Description
Figure 14 - A3F6P Scheme #5 Incomer + I> 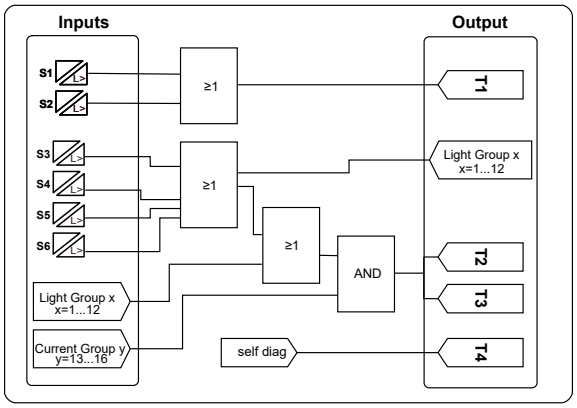	**Selective scheme for an Incomer with current** Same as scheme #3 but with current confirmation added. Scheme #5 is designed for Incomer applications. The current confirmation condition is used only for sensors S3 to S6 and remote sensors. S1 and S2 are installed in cable's and/or CB's compartment of Incomer, current confirmation is not required. T1 will be used remotely as inter-tripping signal so that if current confirmation is required at upstream, it will be managed at upstream. T4 is a self-diagnosis watchdog of the PowerLogic A3 device and other PowerLogic A3 units in the system.
Figure 15 - A3F6P Scheme #6 Feeder + I> 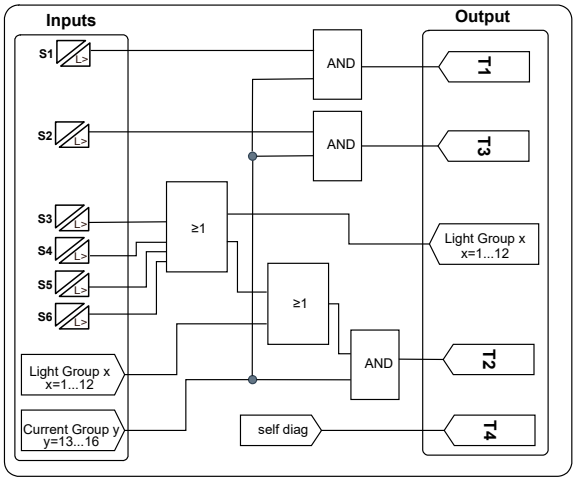	**Selective scheme for an Outgoing feeder with current** This scheme can cover two outgoing feeders. Same as scheme #4 but with current confirmation added. Moreover, local sensors' (S3 to S6) activation data is pushed to Light Group to share with other PowerLogic A3 devices with identical Light Group setting through communication bus. The PowerLogic A3 located in Incomer with scheme #3 or #5 receives the light group from this PowerLogic A3 will treat this data by its logic, trip incoming's CBs to isolate the arc incident which is located on busbar on other part of the electrical installation. T4 is a self-diagnosis watchdog of the PowerLogic A3 device and other PowerLogic A3 units in the system.

Schemes of A3F12P

Table 6 - Schemes of A3F12P

Scheme diagram	Description
Figure 16 - A3F12P Scheme #1 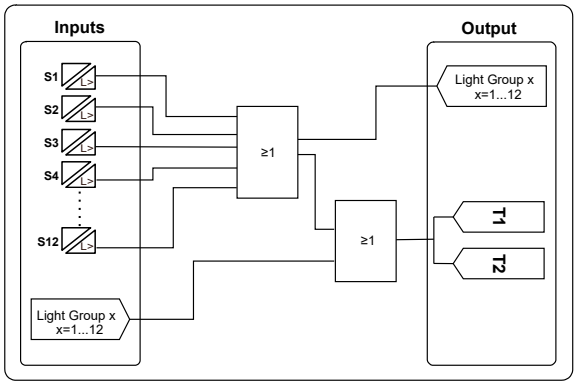	**Non-selective without current confirmation** If local sensors(S1 to S12) and/or remote sensors with identical Light Group setting are lit then T1 and T2 trip. Moreover, all local sensors' (S1 to S12) activation data is pushed to Light Group to share with other PowerLogic A3 devices with identical Light Group setting through communication bus.
Figure 17 - A3F12P Scheme #1: T2 as TRIP + SF(1) 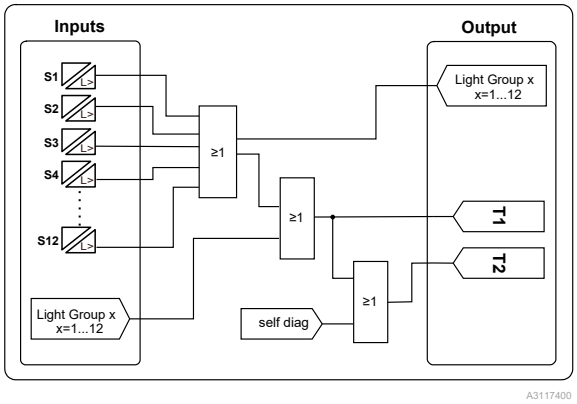	**T2 configurable as TRIP or SF** In the above scheme, T2 provides only TRIP signal. In case of system error such as sensor error, install failed and so on, since there is no self-diagnosis, the A3F12P can not raise alarm but only change the color of LED from green to red. Since the version V01.101, the T2 of A3F12P can be configured to be TRIP only or TRIP + SF. The operation to enable/disable the TRIP + SF for T2 is made by eSetup Easergy Pro in **GENERAL / Main menu / Configuration**, by enabling/ disabling the check box **T2 as TRIP +SF**. If **T2 as TRIP+SF** is disabled, A3F12P works as the above scheme. 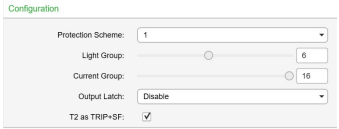
Figure 18 - A3F12P Scheme #2 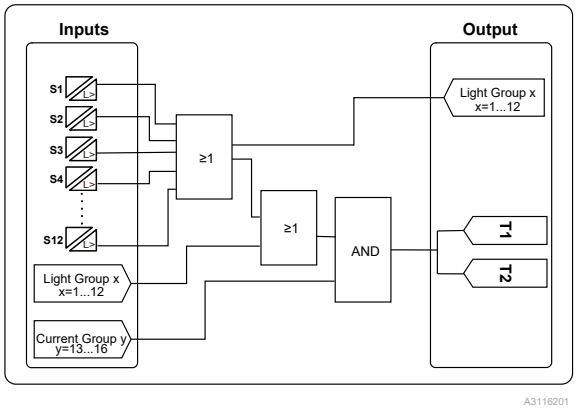	**Non-selective with current confirmation** Same as scheme #1 but with current confirmation added. Moreover, all local sensors' (S1 to S12) activation data is pushed to Light Group to share with other PowerLogic A3 devices with identical Light Group setting through communication bus.

(1) V01.101 and newer version only.

Table 6 - Schemes of A3F12P (Continued)

Scheme diagram	Description
Figure 19 - A3F12P Scheme #2: T2 as TRIP + SF(2) 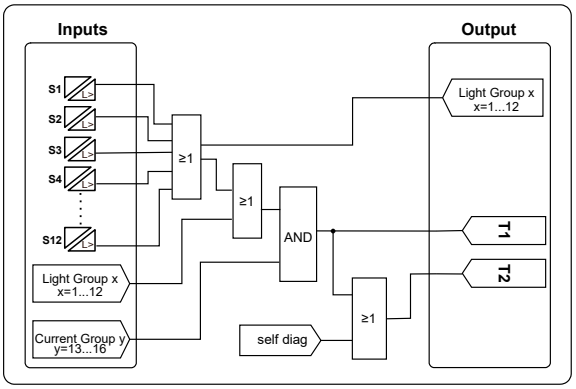	**T2 configurable as TRIP or SF** In the above scheme, T2 provides only TRIP signal. In case of system error such as sensor error, install failed and so on, since there is no self-diagnosis, the A3F12P can not raise alarm but only change the color of LED from green to red. Since the version V01.101, the T2 of A3F12P can be configured to be TRIP only or TRIP + SF. The operation to enable/disable the TRIP + SF for T2 is made by eSetup Easergy Pro in **GENERAL / Main menu / Configuration**, by enabling/ disabling the check box **T2 as TRIP +SF**. If **T2 as TRIP+SF** is disabled, A3F12P works as the above scheme. 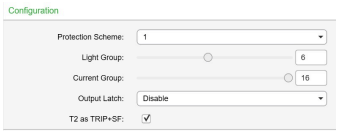
Figure 20 - A3F12P Scheme #3 Incomer 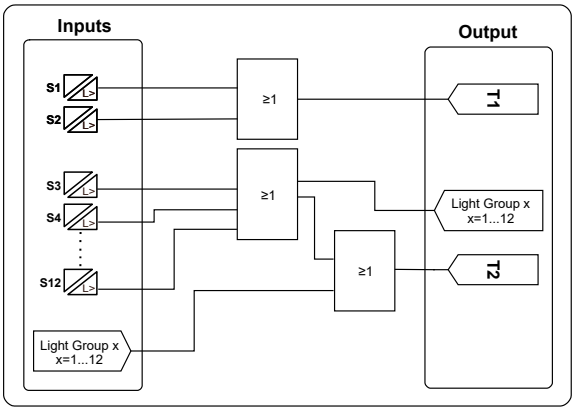	**Selective scheme for an Incomer without current** Sensors S1 and/or S2 can be installed in cable and/or circuit breaker compartment of incomer. T1, which is a high speed output, trips when S1 and/or S2 are lit without current confirmation, remote inter-tripping signal will also be sent. Sensors S3 to S12 can be installed in incomer's busbar compartment or riser's busbar compartment. T2 , which is a conventioanl output relay, trips when S3 to S12 or remote sensros are lit. T2 can be wired to tripping circuit of Incomer's CB. Moreover, all local sensors' (S3 to S12) activation data is pushed to Light Group to share with other PowerLogic A3 devices with identical Light Group setting through communication bus.
Figure 21 - A3F12P Scheme #4 Feeder 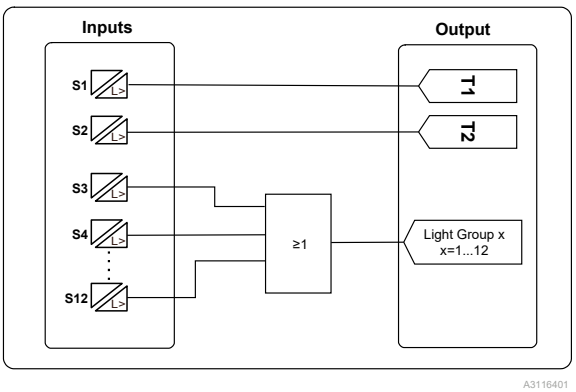	**Selective scheme for an Outgoing feeder without current** This scheme can cover two outgoing feeders. S1 is installed in cable compartment of outgoing X. T1 trips if S1 is lit. T1 is a HSO, can be wired to tripping circuit of outgoing X's CB. S2 is installed in cable compartment of outgoing Y. T2 trips if S2 is lit. T2 is a conventional output, can be wired to tripping circuit of outgoing Y's CB. S3 to S12 are installed in CB's and/ or busbar compartment of outgoing X and/or Y. If any of these sensors is lit then the Light Group is set to ON and sent to other PowerLogic A3 units in the system. For example,

(2) V01.101 and newer version only.

Table 6 - Schemes of A3F12P (Continued)

Scheme diagram	Description
	the PowerLogic A3 which is located in Incomer with scheme #3 or #5 receives the light group from this PowerLogic A3 will treat this data by its logic, trip incoming's CBs to isolate the arc incident which is located on busbar on other part of the electrical installation.
Figure 22 - A3F12P Scheme #5 Incomer + I> 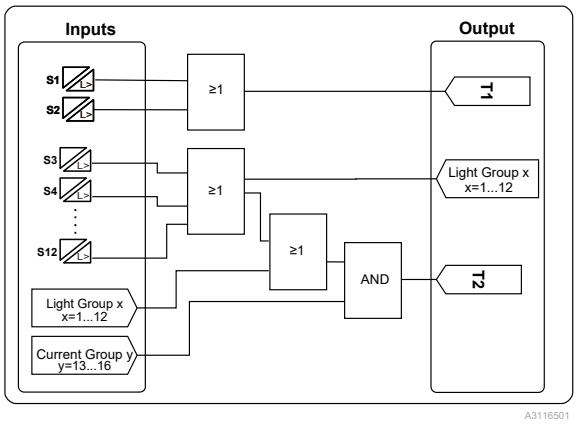	**Selective scheme for an Incomer with current** Same as scheme #3 but with current confirmation added. Scheme #5 is designed for Incomer applications. The current confirmation condition is used only for sensors S3 to S12 and remote sensors. S1 and S2 are installed in cable's and/or CB's compartment of Incomer, current confirmation is not required. T1 will be used remotely as inter-tripping signal so that if current confirmation is required at upstream, it will be managed at upstream.
Figure 23 - A3F12P Scheme #6 Feeder + I> 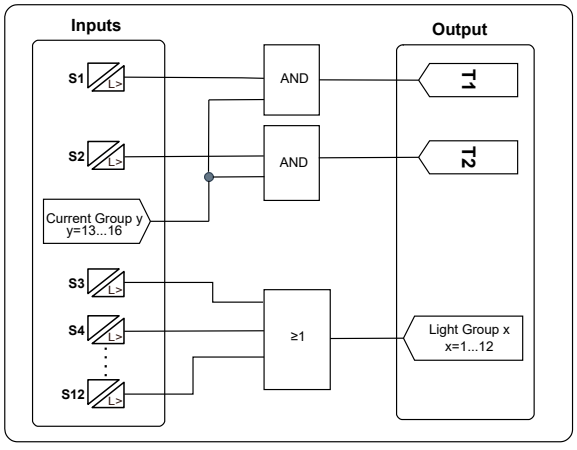	**Selective scheme for an Outgoing feeder with current** This scheme can cover two outgoing feeders. Same as scheme #4 but with current confirmation added. Moreover, local sensors' (S3 to S12) activation data is pushed to Light Group to share with other PowerLogic A3 devices with identical Light Group setting through communication bus. The PowerLogic A3 located in Incomer with scheme #3 or #5 receives the light group from this PowerLogic A3 will treat this data by its logic, trip incoming's CBs to isolate the arc incident which is located on busbar on other part of the electrical installation.

Schemes of A3S6P

Table 7 - Schemes of A3S6P

Scheme diagram	Description
Figure 24 - A3S6P Scheme #1 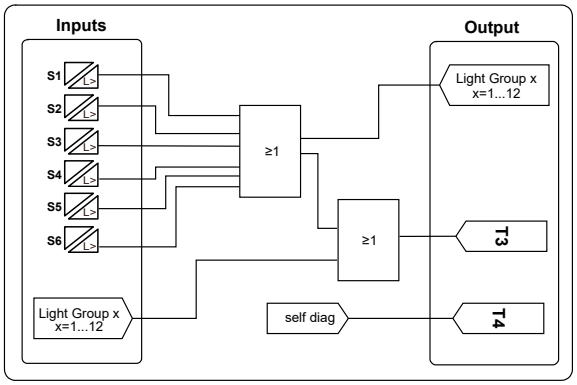	**Non-selective without current confirmation** If local sensors(S1 to S6) and/or remote sensors with identical Light Group setting are lit then T3 trips. Moreover, all local sensors' (S1 to S6) activation data is pushed to Light Group to share with other PowerLogic A3 devices with identical Light Group setting through communication bus. T4 is a self-diagnosis watchdog of the PowerLogic A3 device and other PowerLogic A3 units in the system.
Figure 25 - A3S6P Scheme #2 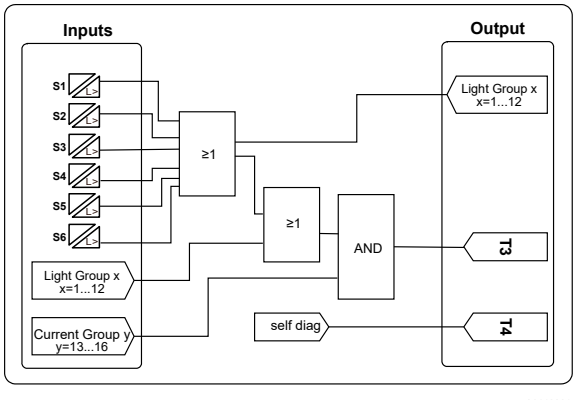	**Non-selective with current confirmation** Same as scheme #1 but with current confirmation added. Moreover, all local sensors' (S1 to S6) activation data is pushed to Light Group to share with other PowerLogic A3 devices with identical Light Group setting through communication bus. T4 is a self-diagnosis watchdog of the PowerLogic A3 device and other PowerLogic A3 units in the system.

Table 7 - Schemes of A3S6P (Continued)

Scheme diagram	Description
Figure 26 - A3S6P Scheme #4 Feeder 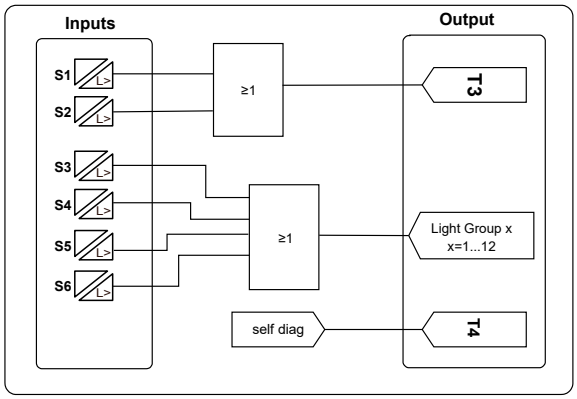	**Selective scheme for an Outgoing feeder without current** This scheme can cover one outgoing feeder. S1 & S2 are installed in cable compartment of outgoing feeder. T3 trips if S1 and/or S2 are lit. T3 is a HSO, can be wired to tripping circuit of outgoing feeder's CB. S3 to S6 are installed in CB's and/or busbar compartment of outgoing feeder. If any of these sensors is lit then the Light Group is set to ON and sent to other PowerLogic A3 units in the system. For example, the A3F6P or A3F12P which is located in Incomer with scheme #3 or #5 receives the light group from this PowerLogic A3 will treat this data by its logic, trip incoming's CBs to isolate the arc incident which is located on busbar on other part of the electrical installation. This specific scheme with A3S6P can be used for sensor redundancy for one feeder. By installing S1 & S2 inside cable compartment, S3 & S4 inside CB compartment and S5 & S6 inside busbar compartment. T4 is a self-diagnosis watchdog of the PowerLogic A3 device and other PowerLogic A3 units in the system.
Figure 27 - A3S6P Scheme #6 Feeder + I> 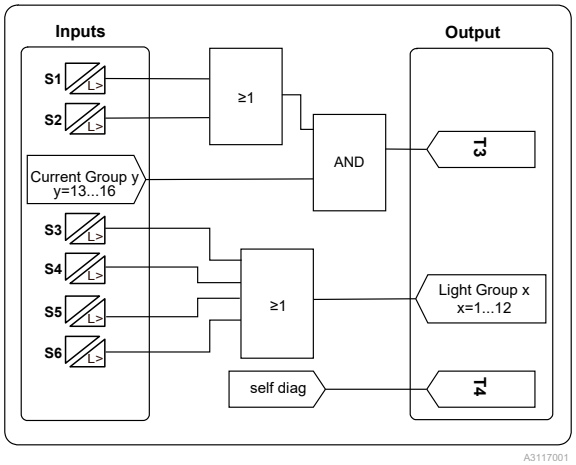	**Selective scheme for an Outgoing feeder with current** This scheme can cover one outgoing feeder. Same as scheme #4 but with current confirmation added only for S1 and S2 sensors installed at cable compartment. Moreover, local sensors' (S3 to S6) activation data is pushed to Light Group to share with other PowerLogic A3 devices with identical Light Group setting through communication bus. The current confirmation condition is not considered for these sensors. Since this condition might be checked at upstream or incoming feeder where A3F6P or A3F12P with scheme #5 are used. T4 is a self-diagnosis watchdog of the PowerLogic A3 device and other PowerLogic A3 units in the system.

Schemes of A3S12P

Table 8 - Schemes of A3S12P

Scheme diagram	Description
Figure 28 - A3S12P Scheme #1 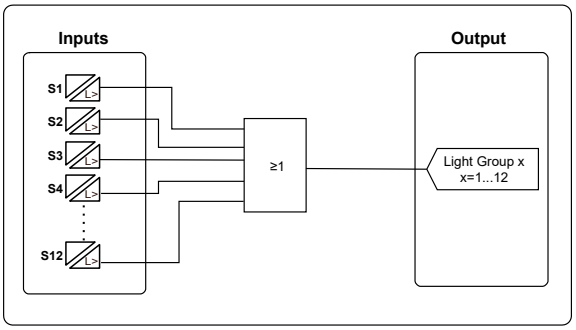	**Non-selective without current confirmation** All local sensors' (S1 to S12) activation data is pushed to Light Group to be shared with other PowerLogic A3 devices with identical Light Group setting through communication bus. A3S12P act as a light data collector in the PowerLogic A3 system without tripping output, nor Light Group input.

Typical use case

The purpose of this chapter is help in better understanding of ”where” the sensors of PowerLogic A3 are recommended to be installed. And where the tripping outputs of PowerLogic A3 devices shall be wired to. In fact each model of PowerLogic A3 uses specific sensors to indicate specific outputs.

The Single-Line-Diagrams (SLDs) used in this chapter are from MV panels applications and use cases. Moreover, they are illustrated based on pre-defined logics inside PowerLogic A3 devices.

NOTE: To simplify the explanation, this chapter shows the PowerLogic A3 small system which is in light only schemes. For I/O peripheral mode, please refer to V321 user manual.

A3F6P

A3F6P scheme #1

Scheme #1 of A3F6P is non-selective without current confirmation scheme. By using A3F6P scheme #1 in any PowerLogic A3 system, all sensors' activation data (either local or remote) of the same Light Group in electrical installation is received by A3F6P and will output trip.

Figure 29 - A3F6P scheme #1 typical use case

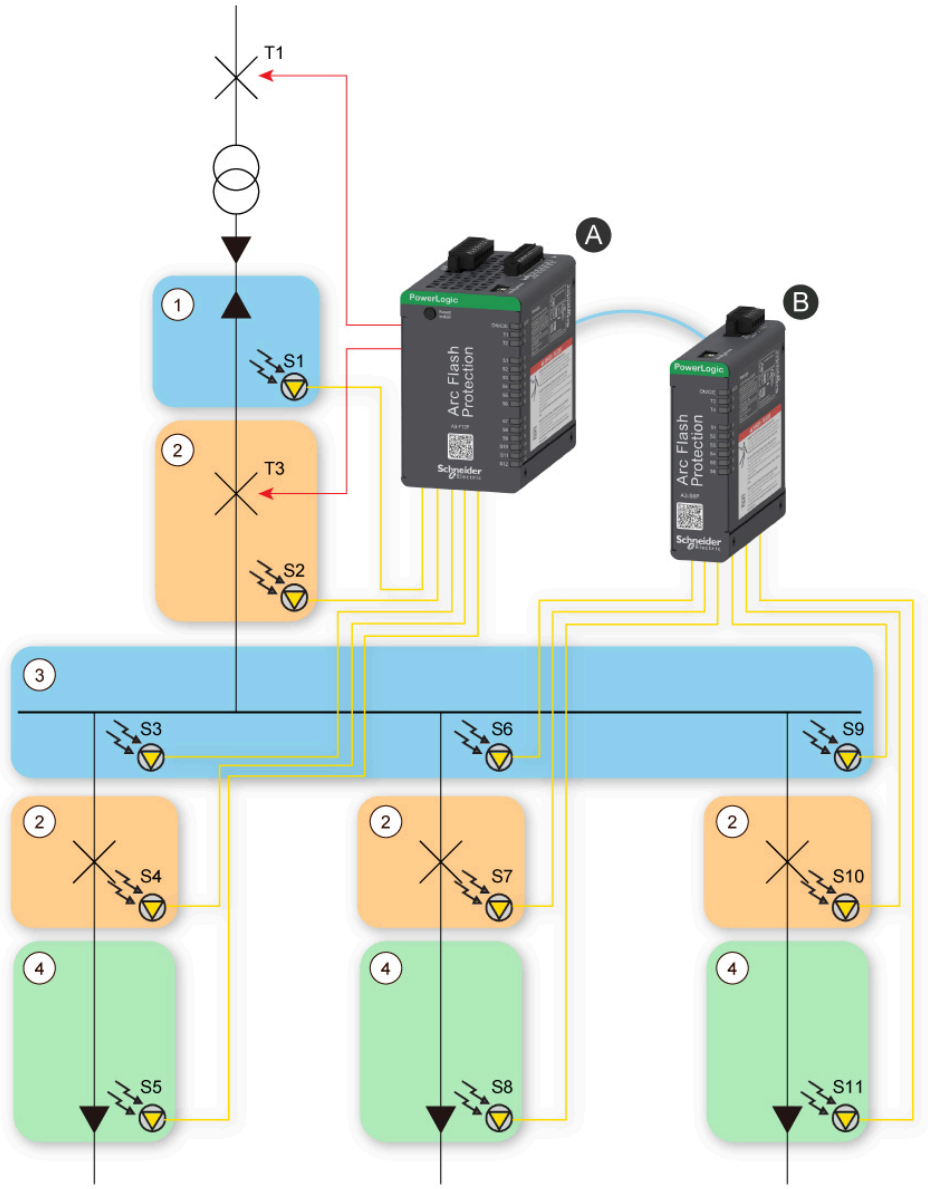

T1	HSO to trip remote/upstream CB	T3	HSO to trip local CB
A	A3F6P scheme #1 G2	B	A3S6P scheme #1 G2
1	Cable	2	CB
3	Busbar	4	Cable

As shown in the above SLD, A3F6P is installed in incoming feeder. T3 trips incoming's CB. T1 trips remote/upstream CB. T1 and T3 are HSOs. T2 could send "Arc incident report" to any supervision system for example SCADA or local signalization system. Moreover, A3F6P can receive remote sensor data through communication bus. For example, in the above SLD A3S6P is connected to A3F6P to build up a small PowerLogic A3 system. Any remote sensors activation of adjacent A3S6P trips all trip outputs of A3F6P.

NOTE: As mentioned in above SLD, it is necessary to configure unique Light Group setting for both of the PowerLogic A3 devices. In the SLD both PowerLogic A3 devices have the same G2 configuration.

A3F6P scheme #3

Scheme #3 of A3F6P is selective scheme for an Incomer without current.

Figure 30 - A3F6P scheme #3 typical use case

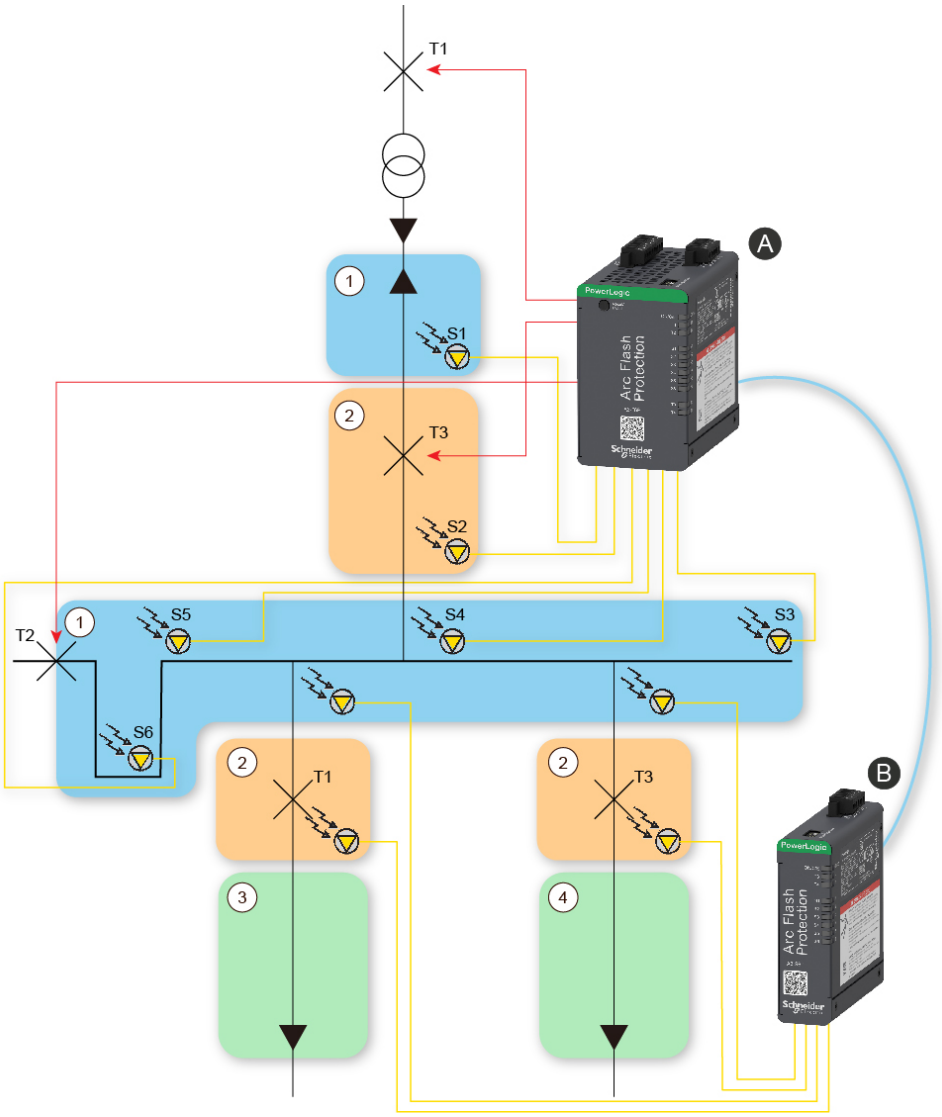

T1	HSO to trip remote/upstream CB	T2	HSO to trip local CB
T3	Conventional relay to trip coupling or remote signalization		
A	A3F6P scheme #3 G2	B	A3xxx scheme #y G2
1	Cable	2	CB
3	Busbar	4	Cable

Local sensor S1 is installed in cable compartment. Local sensor S2 is installed in CB compartment. If S1 and/or S2 is lit the T1, HSO output, trips remote or upstream CB. Other local sensors S3 to S6 are installed on busbar of electrical installation. If these local sensors are activated the T3, HSO output, trips incoming feeder's CB. Moreover, if these sensors are activated T2 operates. T2 could be used as remote signalization for example SCADA or to be wired to coupling CB's tripping circuit.

Besides, A3F6P can get remote sensor data through communication bus from other adjacent PowerLogic A3 devices. Any remote sensors activation of other PowerLogic A3 devices (based on its configured schemes) trips T2 and T3.

NOTE: As mentioned in above SLD, it is necessary to configure unique Light Group setting for both of the PowerLogic A3 devices. In the SLD both PowerLogic A3 devices have the same G2 configuration.

A3F6P scheme #4

Scheme #4 of A3F6P is selective scheme for an Outgoing feeder without current.

Figure 31 - A3F6P scheme #4 typical use case

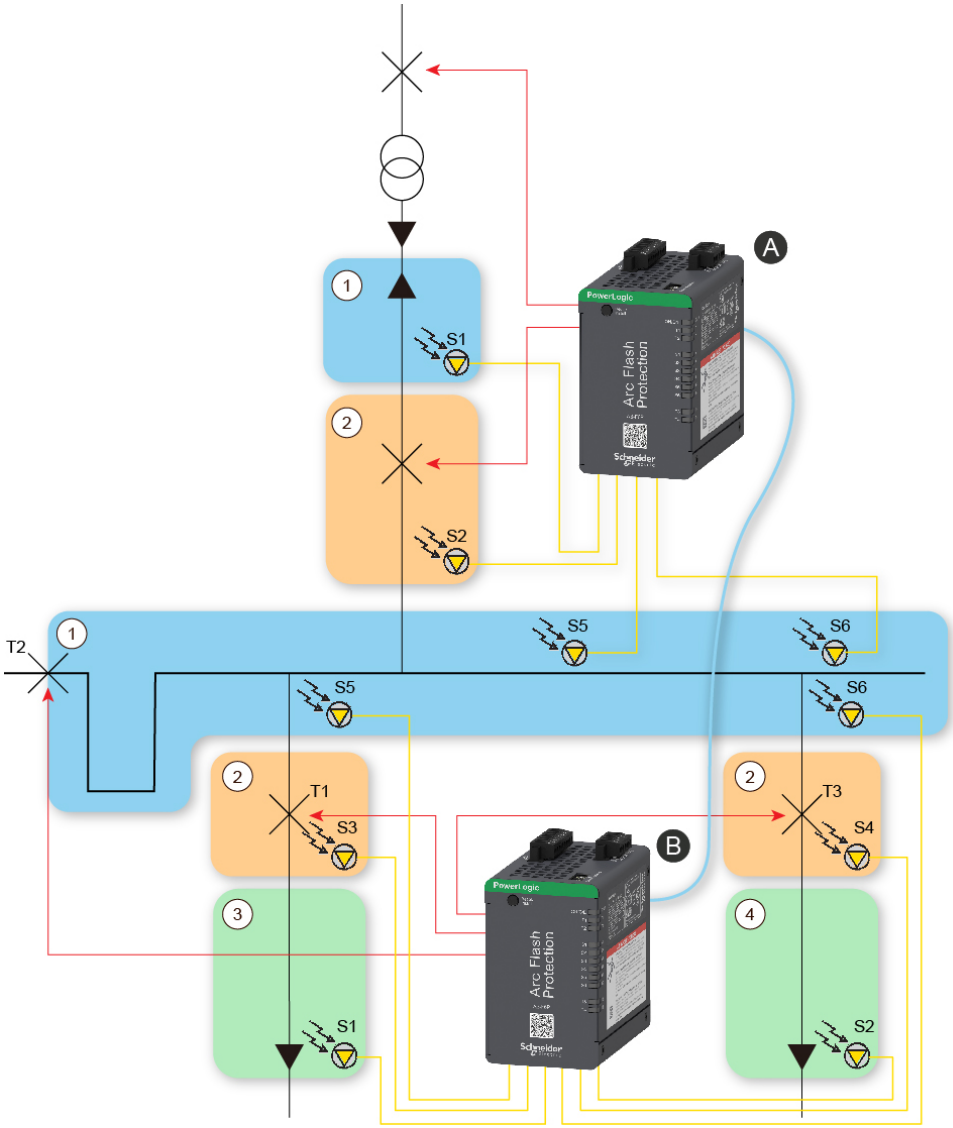

T1	HSO to trip feeder CB X	T2	Conventional relay to trip coupling or remote signalization
T3	HSO to trip feeder CB Y		
A	A3Fxx scheme #3 G2	B	A3F6P scheme #4 G2
1	Cable	2	CB
3	Busbar	4	Cable

As shown above, this scheme controls two outgoing feeders. S1 is installed in cable compartment of outgoing X. T1 trips outgoing X's CB if S1 is lit. S2 is installed in cable compartment of outgoing Y. T3 trips outgoing Y's CB if S2 is lit. S3 to S6 are installed in CB's and/or busbar compartment of both outgoing feeders. If S3 to S6 is lit then T2 trips and can be sent either to coupling or to remote for example SCADA. Moreover, if S3 to S6 is lit the Light Group internal register will be sent to other PowerLogic A3 units in the system. As an illustration, the PowerLogic A3 located in Incomer with scheme #3 receives the light group information and trips incoming CBs to isolate arc incident which is located on busbar/CBs on other part of the electrical installation.

A3F12P

A3F12P scheme #1

Scheme #1 of A3F12P is non-selective without current confirmation condition.

Figure 32 - A3F12P scheme #1 typical use case

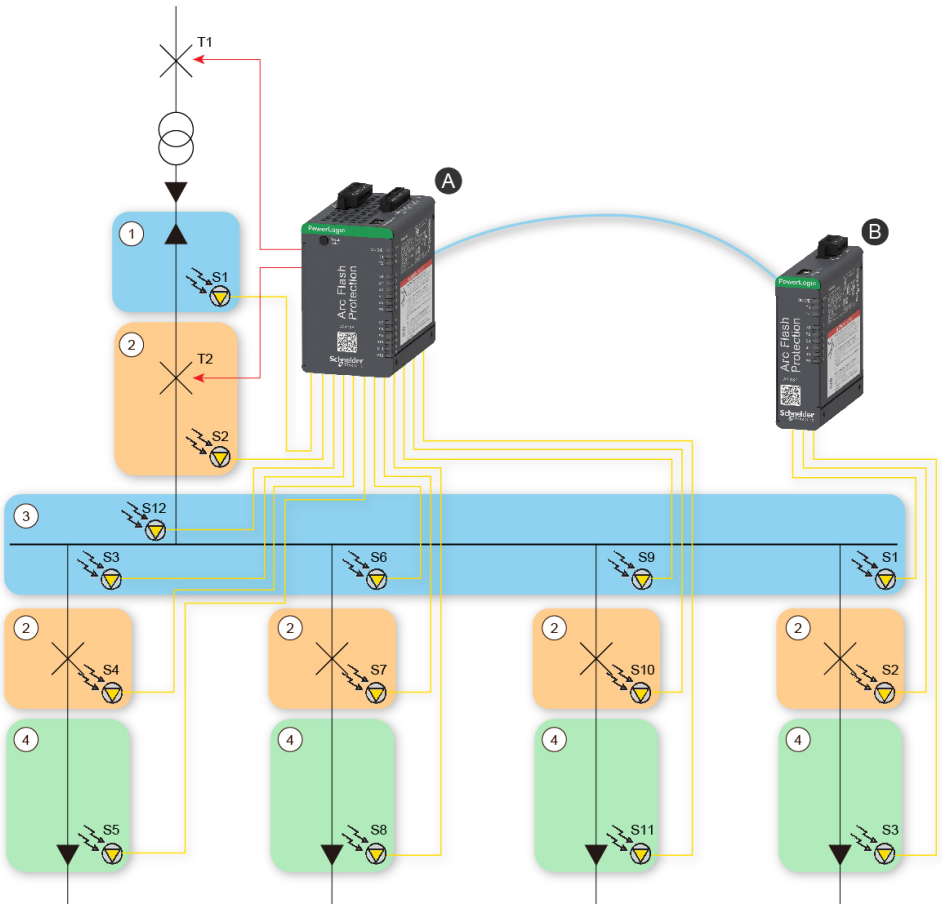

T1	HSO to trip remote/upstream CB	T2	Conventional relay for either local CB tripping or remote signaling, for example SCADA.
A	A3F12P scheme #1 G2	B	A3S6P scheme #1 G2
1	Cable	2	CB
3	Busbar	4	Cable

If local sensors(S1 to S12) and/or remote sensors with identical Light Group setting are lit then T1 and T2 trip. T1 can be wired to trip remote/upstream CB. T2 can be wired to trip local CB. If remote tripping is not required, T1 as HSO, can trip local CB and T2 can be sent as remote signaling.

Moreover, A3F12P can receive remote sensor data through communication bus. For example in the above SLD A3S6P is connected to A3F12P to make a small PowerLogic A3 system. Any remote sensors activation of adjacent A3S6P trips all trip outputs of A3F12P.

NOTE: As mentioned in above SLD, it is necessary to configure unique Light Group setting for both of the PowerLogic A3 devices. In the SLD both PowerLogic A3 devices have the same G2 configuration.

A3F12P scheme #3

Scheme #3 of A3F12P is selective scheme for an Incomer without current confirmation.

Figure 33 - A3F12P scheme #3 typical use case

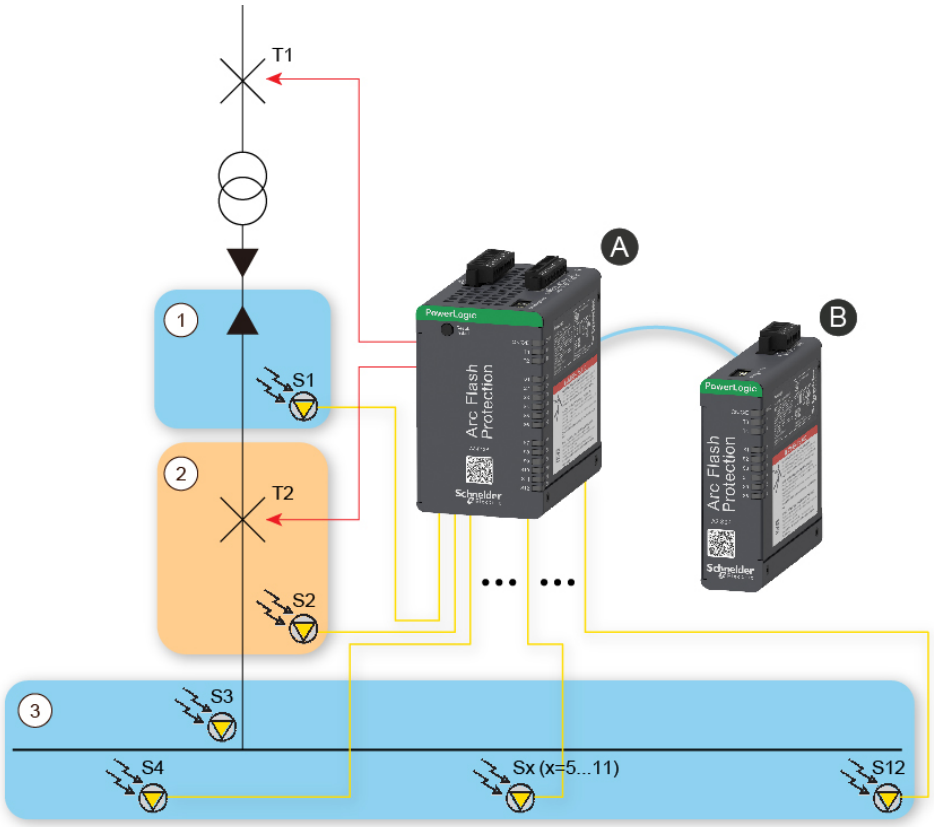

T1	HSO to trip remote/upstream CB	T2	Conventional relay for either local CB tripping
A	A3F12P scheme #3 G2	B	A3S6P scheme #1 G2
1	Cable	2	CB
3	Busbar	4	Cable

S1 and/or S2 can be installed in CB and cable compartment in incomer feeder. T1 trips if these sensors are lit. T1 can send remote inter tipping signal to upstream CB or any other remote CBs.

Sensors S3 to S12 can be installed in incomer's busbar or other points in the busbar compartment of electrical installation. T2 trips when S3 to S12 or other remote sensors from other PowerLogic A3 with same Light Group setting are lit. As an illustration, all or some sensors connected to A3S6P in SLD, based on its scheme configuration. T2 can be wired to tripping circuit of Incomer's CB. Moreover, local sensors of A3F12P (S3 to S12) activation data is pushed to output Light Group.

A3F12P scheme #4

Scheme #4 of A3F12P is selective scheme for an Outgoing feeder without current confirmation. This scheme covers two outgoing feeders.

Figure 34 - A3F12P scheme #4 typical use case

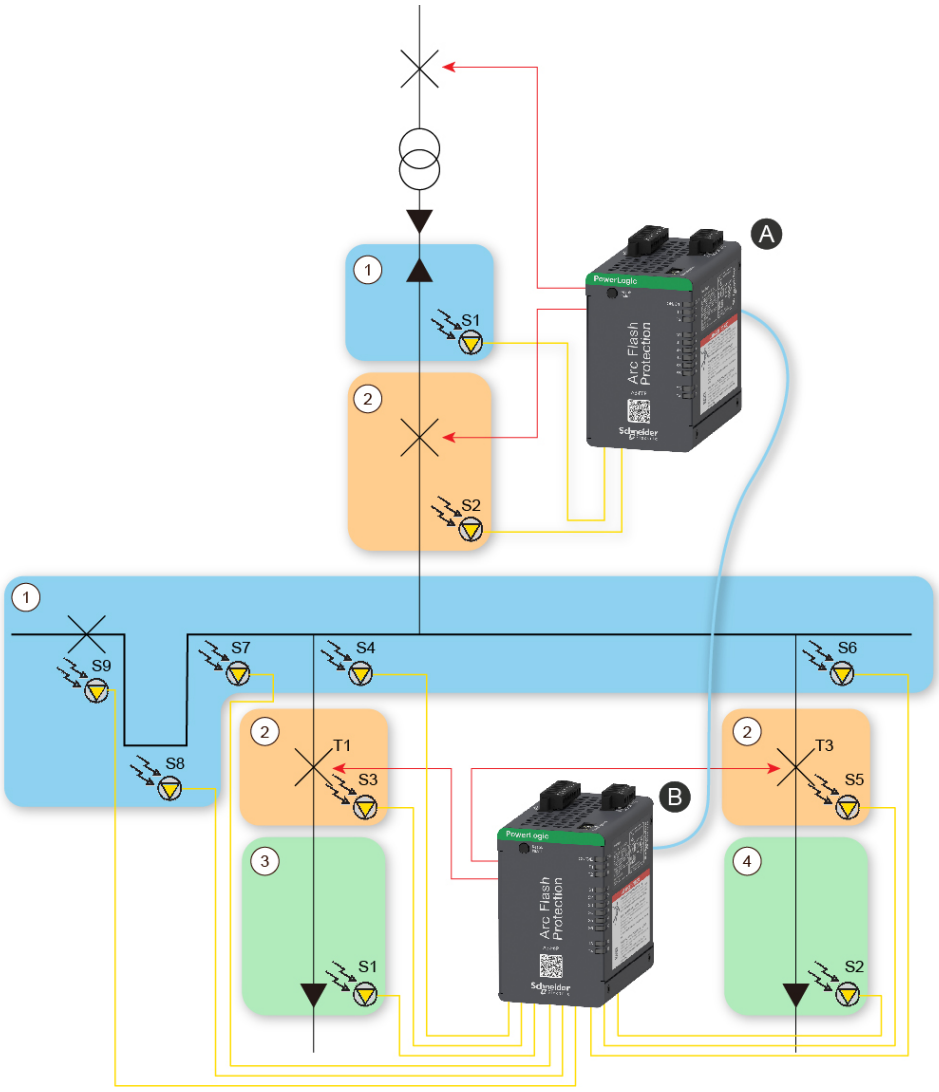

T1	HSO to trip outgoing X's CB	T2	Conventional relay to trip outgoing Y's CB
A	A3F6P/12P scheme #3 G2	B	A3F12P scheme #4 G2
1	Cable	2	CB
3	Busbar	4	Cable

S1 is installed in cable compartment of outgoing X. T1 trips if S1 is lit. T1 could be wired to tripping circuit of outgoing X's CB. S2 is installed in cable compartment of outgoing Y. T2 trips if S2 is lit. T2 could be wired to tripping circuit of outgoing Y's CB. S3 to S6 are installed in CB's and/or busbar compartment of outgoing X and/or Y. Moreover, other sensors, for example S7, S8 and S9 are installed on other points of the busbar. If any of these sensors is lit then the Output Light Group is set to ON and sent to other PowerLogic A3 units in the system. For example, the PowerLogic A3 which is located in Incomer, by scheme #3 configuration, receives the light group data from this A3F12P, treats this data by its logic, it trips incoming's CBs to isolate the arc incident.

A3S6P

A3S6P scheme #1

Scheme #1 of A3S6P is non-selective without current confirmation scheme.

Figure 35 - A3S6P scheme #1 typical use case

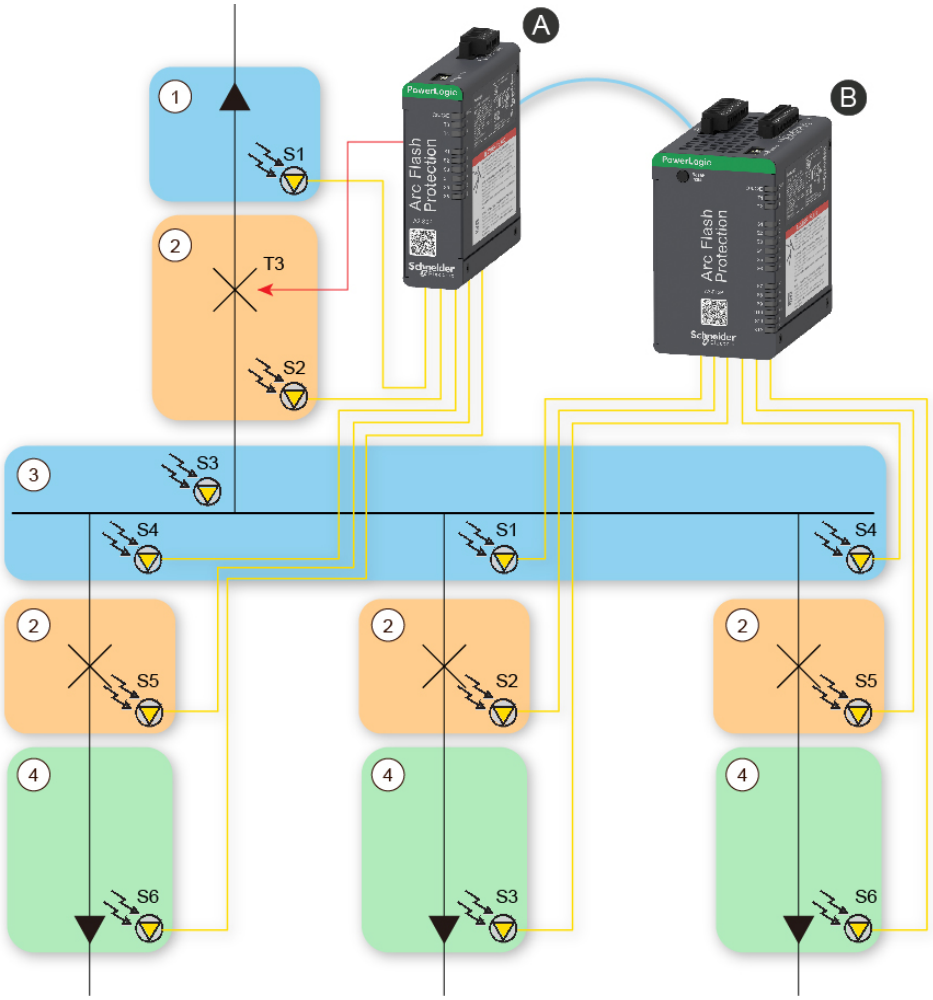

T3	HSO to trip		
A	A3S6P scheme #1 G2	B	A3F6P scheme #1 G2
1	Cable	2	CB
3	Busbar	4	Cable

Same as Scheme #1 of A3F6P & A3F12P. If local sensors (S1 to S6) and/or remote sensors with identical Light Group setting are lit then T3 trips. T3 can be wired to any CB. Moreover, A3S6P can get remote sensor data through communication bus, for example in the above SLD the A3S6P is connected to A3F6P to make a small PowerLogic A3 system. Any remote sensors activation of A3F6P trips T3 output of A3S6P.

NOTE: As mentioned in above SLD, it is necessary to configure unique Light Group setting for both of the PowerLogic A3 devices. In the SLD both PowerLogic A3 devices have the same G2 configuration.

A3S6P must be connected to at least one A3Fxx device. T4 functions as watchdog of self diagnosis of the PowerLogic A3 relay and other PowerLogic A3 devices in the system.

A3S6P scheme #4

Scheme #4 of A3S6P is selective scheme for an Outgoing feeder without current.

Figure 36 - A3S6P scheme #4 typical use case

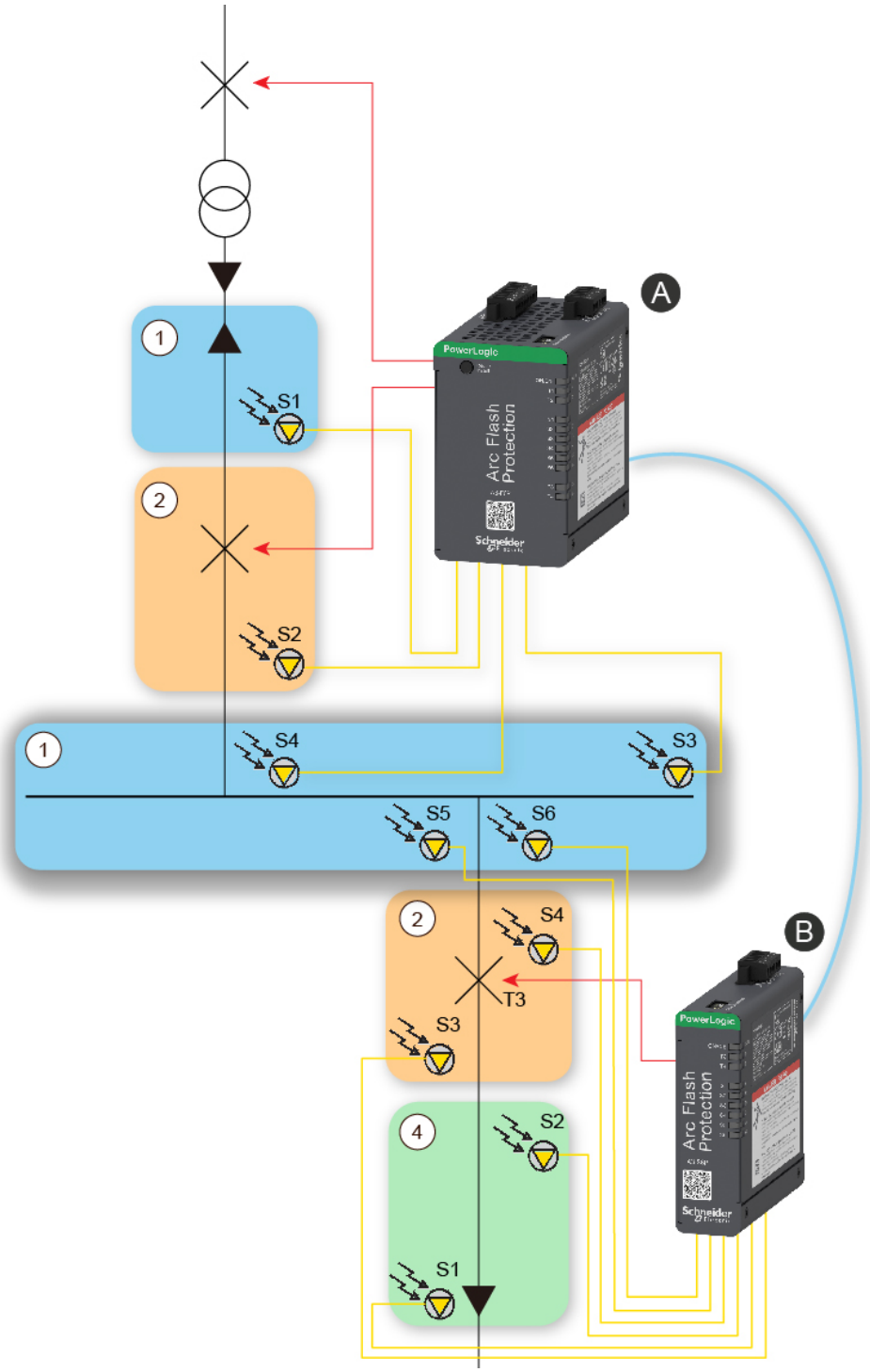

T3	HSO to trip		
A	A3S6P scheme #1 G2	B	A3F6P scheme #1 G2
1	Cable	2	CB
3	Busbar	4	Cable

S1 & S2 are installed in cable compartment of outgoing feeder. T3 trips if S1 and/or S2 are lit. T3, which is a HSO, could be wired to tripping circuit of outgoing feeder's CB. S3 to S6 are installed in CB's and/or busbar compartment of outgoing feeder. If any of these sensors is lit then the Light Group is set to 1 and is sent to other PowerLogic A3 units in the system. For example, the A3Fxx which is located in Incomer with scheme #3 or #5 receives the light group from this A3S6P, treat this data with its logic, trip incoming's CBs to isolate the arc incident which is located on busbar on other part of the electrical installation.

This specific scheme with A3S6P can be used for sensor redundancy for one feeder as shown in the above figure.

A3S6P must be connected to at least one A3Fxx device. T4 functions as watchdog of self diagnosis of the PowerLogic A3 relay and other PowerLogic A3 devices in the system.

A3S12P

A3S12P scheme #1

This is the only scheme of A3S12P. The A3S12P acts as light data collector and shares this data through its configured Light Group setting to other PowerLogic A3 devices in the system.

Figure 37 - A3S12P scheme #1 typical use case

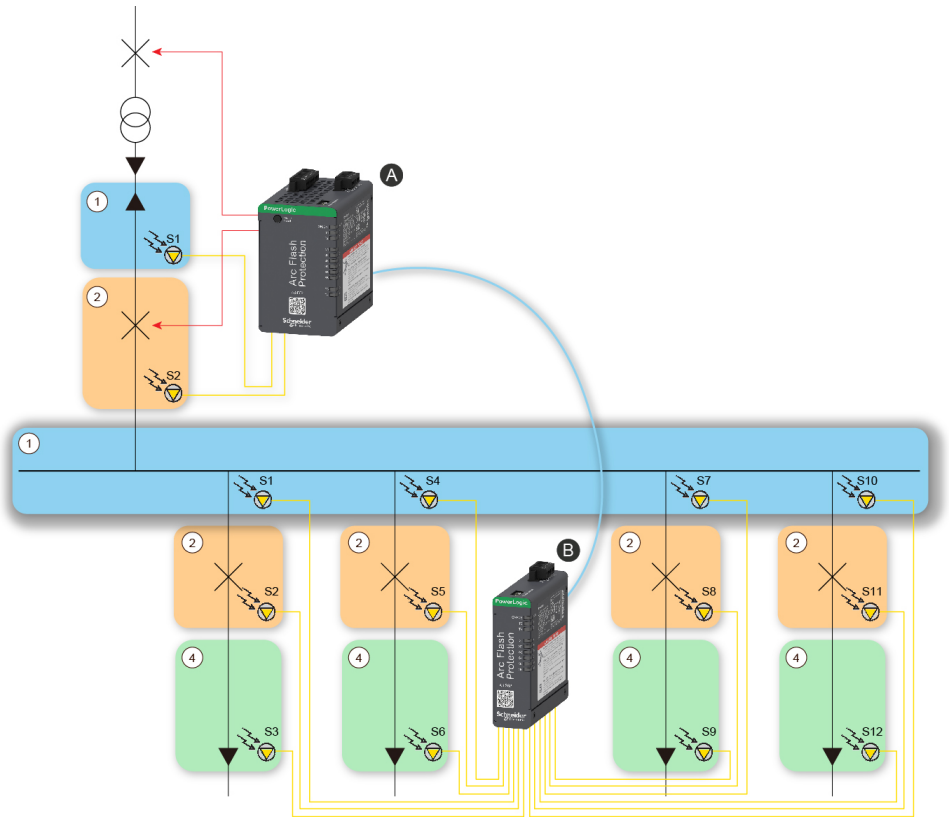

A	A3F6P/12P scheme #3 G2	B	A3S12P scheme #1 G2
1	Cable	2	CB
3	Busbar	4	Cable

As illustrated in the above figure, the 12 local sensors of A3S12P are installed on 4 feeders (each feeder includes 3 sensors in cable, CB and busbar compartment). For any Arc Flash incident in these feeders the Upstream PowerLogic A3 device receives the light data and operates according to its configured scheme.

A3S12P does not have any tripping outputs, it must be connected to at least one A3Fxx device.

Application examples

Non-selective

Requirements: To have non-selective arc flash detection and trip immediately the required main CB to remove immediately the arc from electrical installation.

Analysis: The main request is to remove the arc flash from installation and trip the main incomer feeder of electrical installation no matter where the arc flash happens. So, either arc happens inside the cable compartment of a feeder or inside the busbar compartment of feeder X the PowerLogic A3 system shall detect and trip the main incomer feeder.

Figure 38 - Example 1 for PowerLogic A3 system application

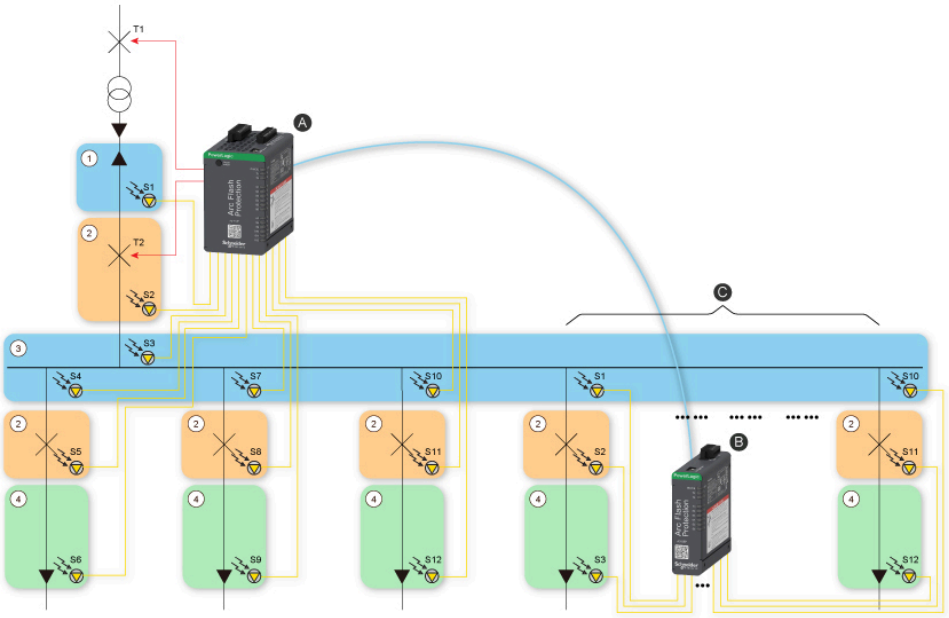

T1	HSO to trip remote/upstream CB	T2	Conventional relay for local CB tripping
A	A3F12P scheme #1 G2	B	A3S12P scheme #1 G2
C	A3S12P collects light signals from 4 feeders		
1	Cable	2	CB
3	Busbar	4	Cable

Technical offer:

Minimum system proposed by PowerLogic A3: one A3F12P installed in the incoming feeder, one A3S12P installed in one of the outgoing feeders. The A3F12P as shown, can cover 4 feeders (including incoming feeder), T1 and/or T2 can be used to trip incoming feeder CB. The A3S12P as shown, can cover 4 outgoing feeders. All the light data captured by its sensors S1 to S12 are shared by A3S12P to upstream.

Both of the PowerLogic A3 devices are set to scheme #1 with unique light group setting, for example, light group 2.

Scheme #1 is chosen since the only requirement is ”non- selective” tripping, it means wherever the arc happens, the electrical installation shall be shutdown immediately. During arc incident inside electrical installation the A3F12P either by its local sensor or by remote sensors (here means the sensors of A3S12P) will activate T1 and T2. These tripping output relays could be wired accordingly. For example, in the above figure, T2 is wired to incoming CB’s tripping circuit and T1 is wired to remote/upstream CB’s tripping circuit.

NOTE: Any A3Sxx device shall be connected to at least one A3Fxx device. A3Sxx have no power supply.

Partially Selective

Requirements: To have selective tripping for outgoing feeders in case of the arc incident inside the cable compartment, the non-selective arc flash detection is other part of the electrical installation.

Analysis: As part of electrical installation requires selectivity and another part does not require the selectivity. PowerLogic A3 can fulfill the requirement effectively. In this application A3F6P in outing isolate the arc incident on the cable compartment from other part of the network. Consequently, the continuity of service is operating. But for any arc incident on the busbar or non-selective area the local incoming CB by T3, upstream CB by T1 and coupling CB by T2(optional) are tripped. The A3F6P installed in the incoming feeder controls these three CBs.

Figure 39 - Example 2 for PowerLogic A3 system application

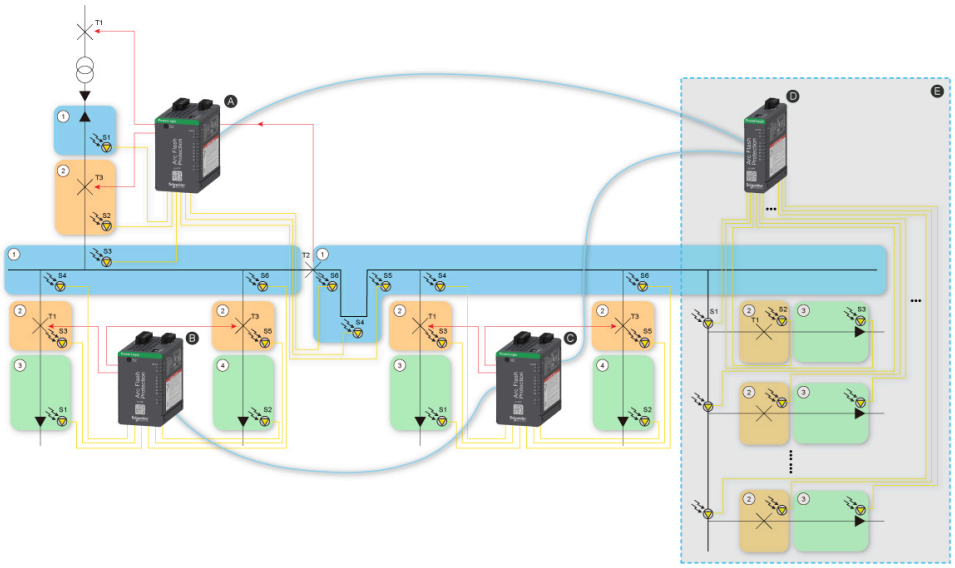

General			
1	Cable	2	CB
3	Busbar	4	Cable
Part of device A			
A	A3F6P scheme #3 G2		
T1	HSO to trip remote/upstream CB	T2	Conventional relay for local CB tripping
T3	Conventional relay to trip coupling or remote signalization		
Part of device B			
B	A3F6P scheme #4 G2		
T1	HSO to trip outgoing CB X	T3	HSO to trip outgoing CB Y
Part of device C			
C	A3F6P scheme #4 G2		
T1	HSO to trip outgoing CB X	T3	HSO to trip outgoing CB Y
Part of device D			
D	A3S12P scheme #1 G2	E	Non-selective area

Technical offer:

Incoming: The A3F6P is used firstly to configure a scheme which covers selective tripping in the incoming with scheme #3, secondly to have a maximum controlling/ tripping output. The A3F6P can receive remote sensor data through light group to cover the non-selective area as well and to isolate fault from main incomer feeder.

Outgoings: The A3F6P is used firstly to configure a scheme which covers the selectivity in the outgoing with scheme #4, secondly to have separate control and trip for 2 outgoing feeders. S1 sensor will trip the CB of outgoing feeder X and S2 sensor will trip the CB of outgoing feeder Y. These A3F6P with configuration scheme #4 send light data of sensors S3 to S6, which are installed on CBs and/or busbar compartments, to the A3F6P in the incoming feeder.

Completely selective

Requirements: To have complete selective tripping for arc incident inside 2 incomings and a coupling electrical installation.

Analysis: When there is an arc flash inside the cable compartment of outgoing feeder, the dedicate circuit breaker of same feeder should be tripped. When there is an arc incident on the CB compartment and on the busbar, the incoming circuit breaker should be tripped (and coupling if any).

Figure 40 - Example 3 for PowerLogic A3 system application

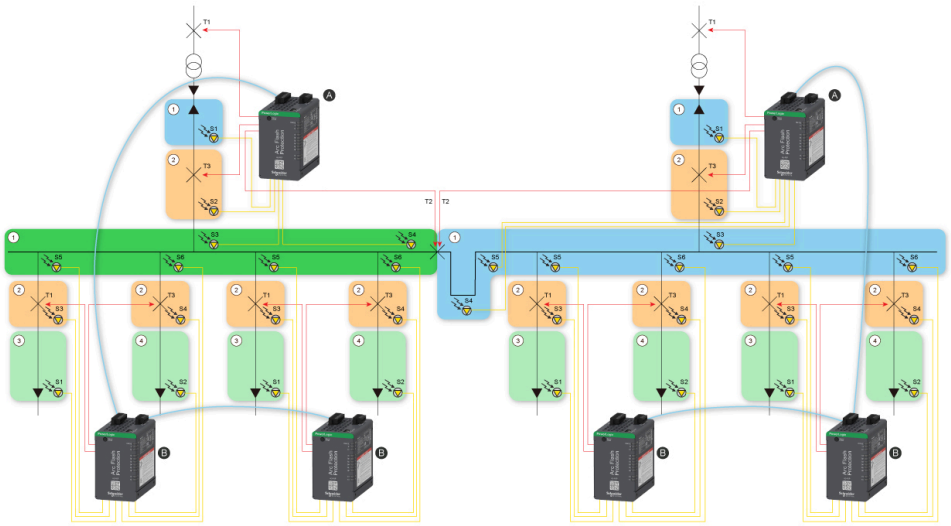

T1	HSO to trip remote/upstream CB	T2	Conventional relay to trip coupling
T3	HSO to trip local CB		
A	A3F6P scheme #3 G2	B	A3F6P scheme #4 G2
1	Cable	2	CB
3	Busbar	4	Cable

Technical offer:

The installation with 2 incoming and a coupling feeder with full selective requirement during arc incident:

As shown in the figure above, there are two independent PowerLogic A3 systems. The one at the right busbar (the busbar in blue) and the one at the left busbar (the busbar in green). Since these systems are independent (not connected by ArcEM cable) and not connected to each other, in case of arc incident at left busbar (in green) or all CB compartment connected to the left busbar just coupling and left incoming circuit breaker are tripped. The same for the right busbar (in blue), in case of arc incident at the right busbar or all CB compartment connected to blue busbar just coupling and right incoming circuit breaker are tripped.

Incoming: The A3F6P is used firstly to configure a scheme which provides selective tripping in the incoming with scheme #3, secondly to have maximum controlling/tripping output. The A3F6P can receive data from remote sensors, which are installed on the busbar, and the data from the sensors of all CB compartments connected to the busbar through light group.

The A3F6P with scheme #3, which is installed in the incoming feeder, Controls 3 CBs. For all arc flash on the bursar/CB compartment (green or blue area), incoming CB will be tripped by T3, and coupling will be tripped by T2. For the arc flash inside the CB and the cable compartment, a direct transfer tripping signal will be sent to remote/upstream CB by T1.

In case of arc on any busbar, for example the left bus bar, The A3F6P in the left incoming will isolate immediately the arc incident from healthy busbar (the right one) and the service continuity is operating. The right incoming feeder which is connected to the right busbar remains in service.

Outgoings: The A3F6P is used firstly to be able to configure a scheme selectivity possibility in the outgoing feeder. Therefore, the scheme is set to #4. Secondly, to have separate control and trip for 2 outgoing feeders. S1 sensor will trip the CB of outgoing feeder X and S2 sensor will trip the CB of outgoing feeder Y. These A3F6P with configuration scheme #4 send light data of sensors S3 to S6, which are installed on CBs and/or busbar compartments, to the A3F6P in the incoming feeder.

> **NOTE:** Since the two PowerLogic A3 systems are independent, it is allowed to set any light group value. As shown in the above figure, even the same light group value for both of the 2 systems. For example, set light group G2 for both the 2 systems.

I/O peripheral mode application

As mentioned in Three kinds of operation mode, page 14, PowerLogic A3 supports three kinds of operation mode: stand-alone, system and I/O peripheral mode. The first two modes have been introduced in previous use cases and application examples. This section introduces an application example of I/O peripheral mode.

The V321 equipped with an ArcEM card in slot 6 can constitute an arc protection system with up to 16 PowerLogic A3 devices. The PowerLogic A3 devices work as peripherals of V321 in the system, as the other legacy products of Schneider Electric, for example Vam10L, Vam12L. If the PowerLogic A3 device is set to scheme #1 non-selective, it’s like Vam10L with more trip outputs and work in L> only mode. If the PowerLogic A3 is set to scheme #4 feeder, it’s like Vam12L. If the PowerLogic A3 device is set to scheme #2 or #6 which considers the current confirmation, it can be seen as working in L> & I> mode. Therefore, for PowerLogic A3, it is not simply substitute device of Schneider Electric legacy products, it’s more like substitute solution. The followed image shows an application example.

Figure 41 - Example of PowerLogic A3 I/O peripheral mode application

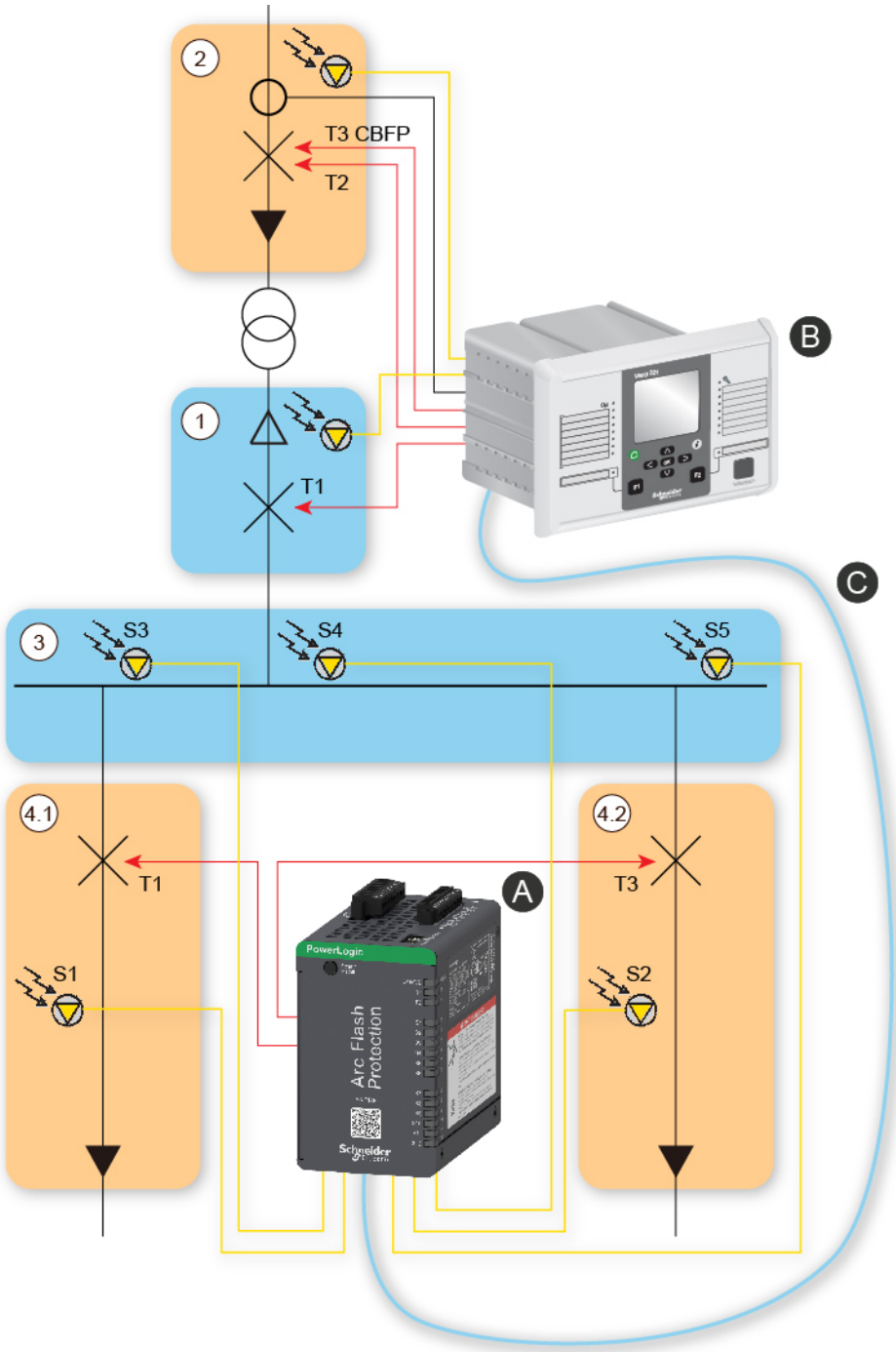

General			
A	A3F6P	B	V321 central unit
C	Connection between V321 and A3F6P Forward I>int to group 16. Group 1 to transmit I> information for V321 tripping. Group 16 to receive L> information from V321.		
1	Cable	2	CB
3	Busbar	4.1, 4.2	CB

For the A3F6P, set protection scheme to #6, two outgoing feeders can be controlled. S1 is installed in cable compartment of outgoing X. T1 trips CB of outgoing X if S1 is lit. S2 is installed in cable compartment of outgoing Y. T3 trips CB of outgoing Y if S2 is lit. The current confirmation is received from V321 by ArcEM bus. S3 to S6 are installed in CB's and/or busbar compartment of both outgoing feeders. If S3 to S6 is lit then T2 trips and the trip signal will be sent either to coupling or remote, for example SCADA. Moreover, if S3 to S6 is lit the light group internal register will be sent to V321 by ArcEM bus. The V321 which is located in Incomer gets the light group information will activate an arc stage which T1 will be assigned and trip the incoming CBs to isolate the arc incident located on busbar/CBs in other part of the electrical installation. Another arc stage which T2 will be assigned will be activated if sensors in incomer cable lit. Also, a dedicated arc stage trips T3 with time delay for CBFP is needed.

NOTE: A3F6P shall be powered by an independent power supply. Group 1 to 12 are used for Light criteria. Group 13 to 16 are used for Current confirmation.

Modbus register and LN of IEC 61850

The V321 is equipped with multiple communication ports and supports various protocols. The status and local sensor status of PowerLogic A3 device working on IO peripheral mode can be monitored by SCADA.

Modbus

The Modbus registers for PowerLogic A3 information are as below:

Figure 42 - Modbus registers for PowerLogic A3 information

[50]	A3 Slave list	R -	1 = 1	-	403700...403763
[51]	A3's Connected, Activated, Error	R -	1 = 1	-	403764...403955
[52]	A3 LGroups	R -	1 = 1	-	403956
[53]	A3 IGroups	R -	1 = 1	-	403957

For PowerLogic A3 slave list registers:

- 403700 stores the physical address (device ID) of the 1st PowerLogic A3 connected to V321.
- 403701 stores the physical address (device ID) of the 2nd PowerLogic A3 connected to V321.
- ... and so on.

For example, the value of register 403767 = 7 (0b0000 0000 0000 0111), indicates the 2nd PowerLogic A3 has 3 sensors connected in channel 1, 2, 3.

IEC 61850

In the IEC 61850 data map list of V321, there are 16 logic nodes designed for PowerLogic A3 device as shown below:

Figure 43 - Logic nodes for PowerLogic A3 in the IEC 61850 data map list of V321

399	AMSTGGIO203	A3 UNIT 0	☑	☐	☐	☑
400	AMSTGGIO204	A3 UNIT 1	☐	☑	☐	☑
401	AMSTGGIO205	A3 UNIT 2	☐	☐	☐	☐
402	AMSTGGIO206	A3 UNIT 3	☐	☐	☐	☐
403	AMSTGGIO207	A3 UNIT 4	☐	☐	☐	☐
404	AMSTGGIO208	A3 UNIT 5	☐	☐	☐	☐
405	AMSTGGIO209	A3 UNIT 6	☐	☐	☐	☐
406	AMSTGGIO210	A3 UNIT 7	☐	☐	☐	☐
407	AMSTGGIO211	A3 UNIT 8	☐	☐	☐	☐
408	AMSTGGIO212	A3 UNIT 9	☐	☐	☐	☐
409	AMSTGGIO213	A3 UNIT 10	☐	☐	☐	☐
410	AMSTGGIO214	A3 UNIT 11	☐	☐	☐	☐
411	AMSTGGIO215	A3 UNIT 12	☐	☐	☐	☐
412	AMSTGGIO216	A3 UNIT 13	☐	☐	☐	☐
413	AMSTGGIO217	A3 UNIT 14	☐	☐	☐	☐
414	AMSTGGIO218	A3 UNIT 15	☐	☐	☐	☐

The 16 LNs from **AMSTGGIO203** to **218** correspond to PowerLogic A3 devices indexed from 1 to 16. LN description can be edited by eSetup Easergy Pro. Each LN has 14 Data Objects, the definition is as shown below:

Data Object	Description
STIntIn1	Shows the address of PowerLogic A3 device
STIntIn2	Shows the status of PowerLogic A3 device: “OK” = 0, “Software Updating” = 1, “Added” = 2, “Lost” = 3, “Tripping” = 4, “Improper” = 5
STIntIn3	Shows status of sensor **channel #1**: Value = (Bit3 | Bit2 | Bit1 | Bit0), “Connected” = Bit0, “Installed” = Bit1, “Active” = Bit2, “Error” = Bit3
STIntIn4	Shows status of sensor **channel #2**: Value = (Bit3 | Bit2 | Bit1 | Bit0), “Connected” = Bit0, “Installed” = Bit1, “Active” = Bit2, “Error” = Bit3
…	

If a PowerLogic A3 with address 12 and with 3 sensors in channel 1 to 3. Before tripped by sensor 3 all sensors have been installed. The values of corresponding data objects are as below:

Data Object	Value	Description
STIntIn1	12	The address of the PowerLogic A3 device is 12
STIntIn2	4	The status of the PowerLogic A3 device is Tripping
STIntIn3	3	The status of sensor 1 is Connected and Installed
STIntIn4	3	The status of sensor 2 is Connected and Installed
STIntIn5	7	The status of sensor 3 is Connected, Installed and active.

After finish wiring including cables connection, power on the system and send install command by V321. All A3 devices connected to V321 will be shown in the menu of **PROTECTION/ARC ArcEM Unit Configurator**. The Modbus register and IEC 61850 LN correspond to the index of the A3 devices, for example, 403700 and AMSTGGIO203 correspond to the first A3 device with the smallest address.

NOTE: The address of each A3 device should be unique in a system.

Supporting functions

Test mode

The test mode is used to verify the sensor reliability and the system configuration during commissioning or maintenance. In test mode, the device keeps operate according to setting parameters and inputs, but the physical output relays will be blocked. For example, an A3F6P works on Scheme#4, Group 2 enters test mode. Activate the sensor 3, the LEDs of sensor 3 and T2 will light up but physical T2 output relay will not trip. Group 2 message in ArcEM bus also can be grabbed, T2 LED light up without physical T2 output relay trip. Therefore, the consistency between the wiring of sensors and the parameter settings of devices can be directly checked visually by LEDs. Also, the bit 'simulation' of Groups messages transmitted through the ArcEM bus will be set to ON. Therefore, the test mode is accessible not only for individual device, but also for PowerLogic A3 system.

NOTE: The V321 device is without test mode, but the bit 'simulation' of Group messages transmitted through the ArcEM bus will be checked before taking actions. Therefore, the sensor of PowerLogic A3 device which is in test mode cannot activate the arc stages in V321.

The followed diagram shows controlling the device mode by the button of A3F:

Figure 44 - Control the device with button

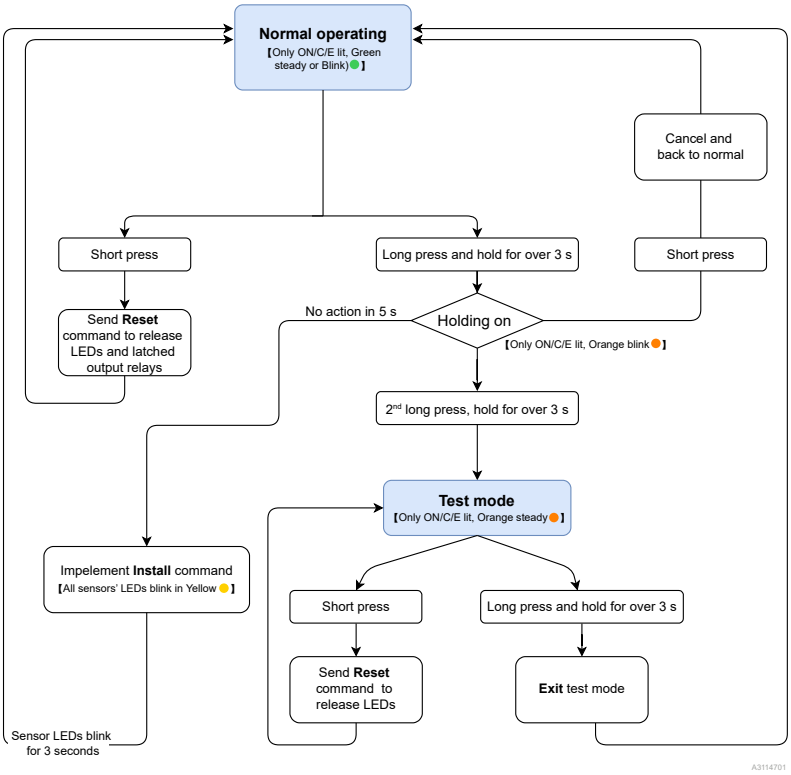

- **Enter test mode**

  To enter the test mode, press and hold the reset/install button for 3 s, the ON/C/E LED will flash in ● orange. Press and hold the button again for 3 s when the LED is flashing, the ON/C/E LED light will be in steady orange. If the system contains multiple A3F devices, each of the A3F device can be operated to let the whole system enter the test mode. In test mode, all PowerLogic A3 devices' ON/C/E LEDs will be in steady ● orange.

  NOTE: To enable test mode, make sure that the PowerLogic A3 device has been installed.

- **Reset in test mode**

  The reset button is still available when the device is in test mode. Not only to release the LEDs of PowerLogic A3, but also to release V321 if enabled.

- **Exit test mode**

  To exit the test mode, press and hold the reset/install button for 3 s, the ON/C/E LED will be in ● green. It means the system is restored to normal operation mode. Also, each A3F in the system can restore the whole system to normal operation mode. Meanwhile, if the PowerLogic A3 is connect to V321, the Installation command sent from V321 can also restore the PowerLogic A3 to normal operation mode.

  NOTE: Power outage and restart can also restore to normal operation mode. But it is not recommended for a PowerLogic A3 system, because all the PowerLogic A3 devices in the system need to be restarted. If some PowerLogic A3 devices were not restarted and were still in test mode while others were in normal operation, it will be easy to get confused.

Self-supervision

The electronics and operation of the PowerLogic A3 are supervised by means of a separate self-supervision logic. The arc flash sensors are also self-supervised. In case the self-supervision detects a permanent error within the PowerLogic A3 or the arc sensors connected, the self-supervision output and system status indication LED are activated.

Sensor channels supervision

All sensor channels can be supervised continuously. If an error happened, alarm messages will be sent out. For example the sensor disconnected, sensor uninstalled, sensor short-circuit, daylight error, and so on. Sensor LED will be blinking in yellow and ON/C/E LED will be in red. Also, T4 will trip out if exists in the system.

Table 9 - Sensor states and their description

State	Description	ON/C/E LED and T4	Sensor LED
1. Connected	Sensor is installed and in normal operation.	-	Off
2. Active	Sensor is activated.	-	Steady yellow
3. Uninstalled	If there is sensor attached, but not yet installed, its state is uninstalled.	Red/Trip	Blinking in yellow
4. Disconnected	The sensor may be lose, for example, burnt in an arc accident.	Red/Trip	Blinking in yellow
5. Overcurrent	The sensor may short-circuit.	Red/Trip	Blinking in yellow
6. Daylight	The sensor is sensitive for over 5 s.	Red/Trip	Blinking in yellow

Parameter and configuration supervision

The parameters and configurations will be saved in memory after the install command is conducted successfully. Alarm messages will be sent out if any of the parameters and configurations was changed. The key configuration is the position of the two rotary switches, scheme and light group. When configuring PowerLogic A3 with eSetup Easergy Pro, the key parameters are: Protection scheme, Light Group, Current Group, Output Latch, and Address.

Relays monitoring

Relay outputs are monitored against broken relay(3) or relay driver circuit(4).

(3) Relay primary coil failure can be detected.
(4) Relay control signal is monitored.

Table 10 - Relay states and description

Relay state	Description	System state
1. Normal	No failures detected.	OK
2. Faulted	Diagnostic detected failure in relay (5), (6).	Faulted

Figure 45 - Relay state machine

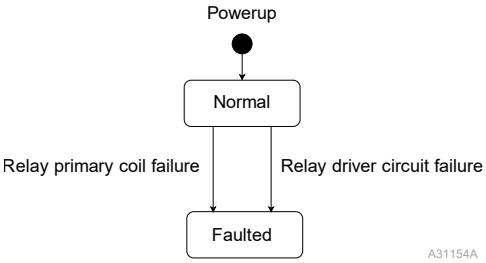

System supervision

When multiple PowerLogic A3 devices are connected as a system and installed, each device monitors the condition of the whole system. If any device has a problem, each device reacts to it and activates the WD relay. So, the status of each device indicates the status of whole system.

Note that PowerLogic A3F12P and PowerLogic A3S12P don’t have the WD relay, but it will transfer its status to other devices on the system, and they will activate the WD relay accordingly.

Figure 46 - Healthy system running normally

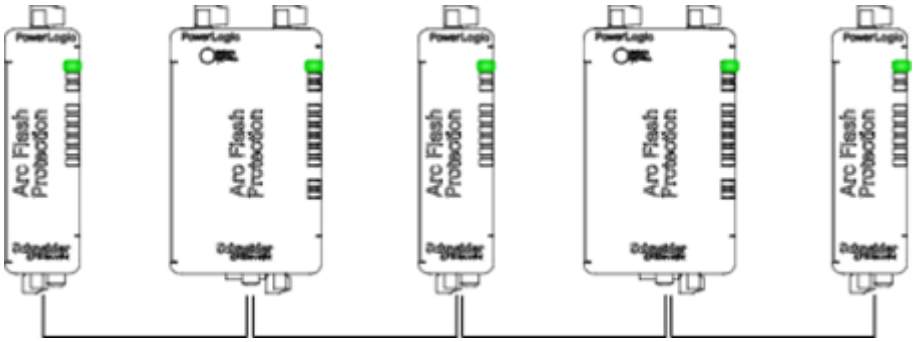

Figure 47 - System structure changed, for example, ArcEM cable failure. All devices react.

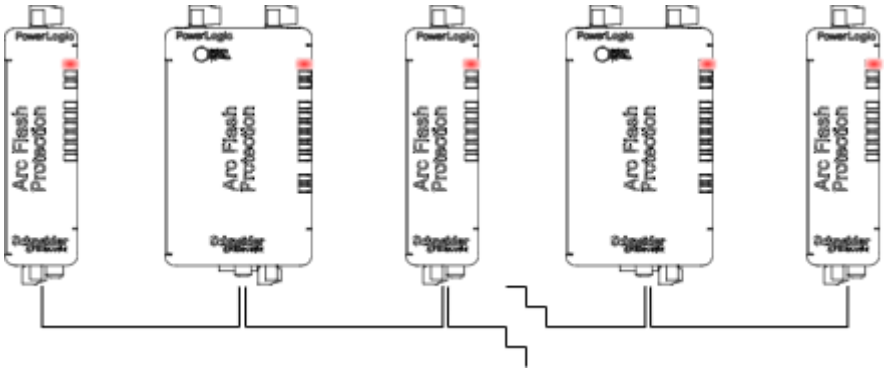

(5) Relay primary coil failure can be detected.
(6) Relay control signal is monitored.

Figure 48 - Faulty sensor in single device. All device reacts

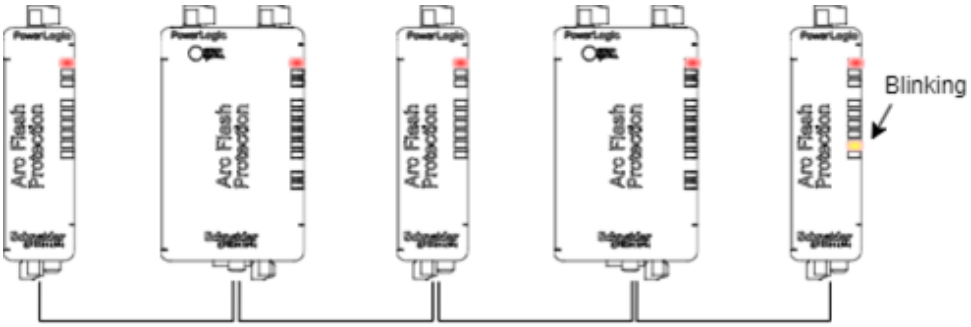

Self-diagnosis signals about PowerLogic A3 in V321

When the PowerLogic A3 devices operate as I/O peripheral of V321, the alarm messages can be supervised by V321.

Step 1: Go to **Protection > ARC ArcEM Bus**, under **Links to Arc SelfDiag** section, select the error types of the PowerLogic A3 which can trigger alarms of the V321. These diagnostic events are recorded into V321 event log with their time stamps. Any of these events can activate general ArcEM alarm signal which can be linked to self-diagnosis signals of V321.

Figure 49 - Links to Arc SelfDiag

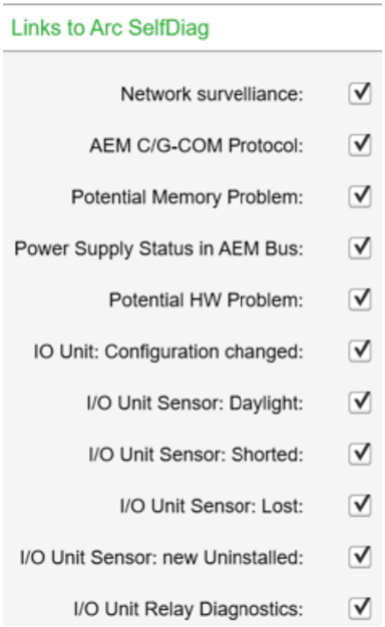

Step 2: Go to **Device/TestDiagnosis** setting view's section **Selfdiag Signal Configuration**. Select any group of *Selfdiag1*, *Selfdiag2* or *Selfdiag3* for ArcEM IO signal which is at the bottom.

Figure 50 - Selfdiag Signal Configuration

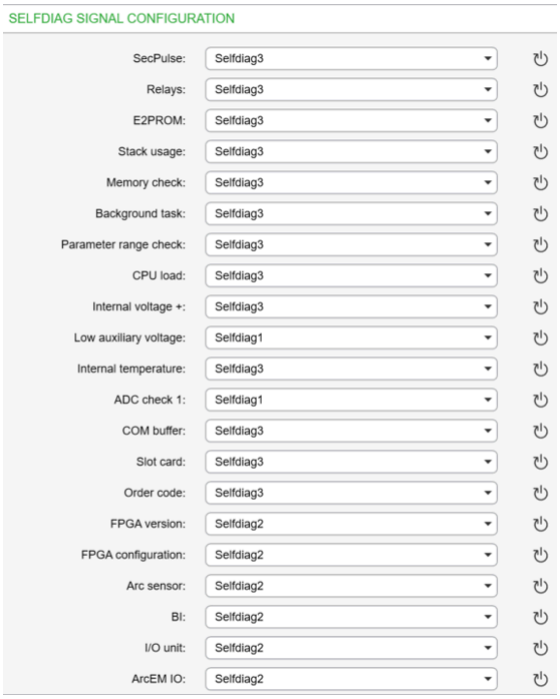

The self-diagnosis 1/2/3 group can be linked to self-diagnostic relay in **Device/ Test > Diagnosis** section. The self-diagnosis 1/2/3 group can also be linked to other signals such as virtual output in Matrix. Meanwhile, there are 3 signals about ArcEM bus in Output Matrix, as shown below. ArcEM bus comm. Indicates the communication between installed A3 devices and ArcEM card in slot 6 are working normally. When any A3 device is disconnected, the ArcEM comm. lost signal will be set to ON. Any sensor of A3 devices' activation will set the signal of ArcEM light sensor to ON. Users can map these three signals to virtual outputs and/or physical outputs for SCADA monitoring.

Figure 51 - The 3 signals about ArcEM bus in Output Matrix

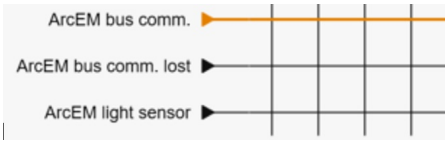

Connection

Connector terminals

⚠⚠DANGER

HAZARD OF ELECTRICAL SHOCK, EXPLOSION, ARC FLASH OR FIRE

- Tighten the terminal screws within the recommended range.
- Protect the power supply circuit against over currents.

Failure to follow these instructions will result in death or serious injury.

⚠⚠DANGER

HAZARD OF ELECTRIC SHOCK, EXPLOSION, OR ARC FLASH

- The system integrator is responsible for compliance with all local and national electrical code requirements as well as all other applicable regulations with respect to grounding of all equipment.
- In case of using multiple auxiliary power supplies on different powered devices, the installer shall ensure a proper grounding for the overall system.
- Power supply connection shall be made with a twisted pair cable of a cross-sectional area of at least 1.5 mm^2(AWG16).

Failure to follow these instructions will result in death or serious injury.

PowerLogic A3F6P

Figure 52 - X1, X2, X5 connector terminals

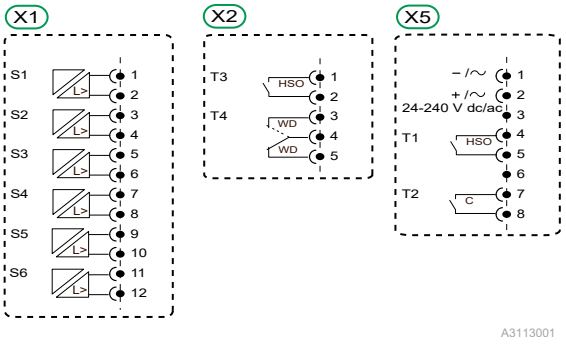

PowerLogic A3F12P

Figure 53 - X1, X2, X5 connector terminals

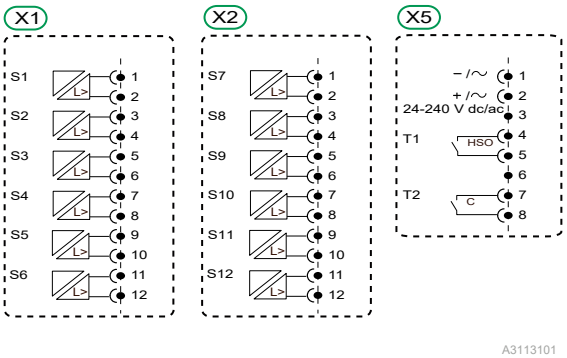

PowerLogic A3S6P

Figure 54 - X1, X2 connector terminals

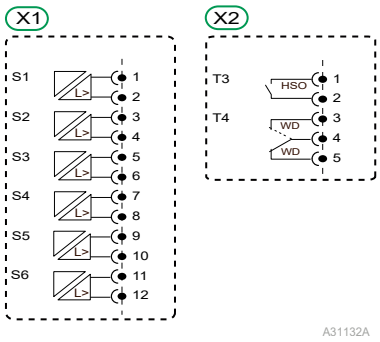

PowerLogic A3S12P

Figure 55 - X1, X2 connector terminals

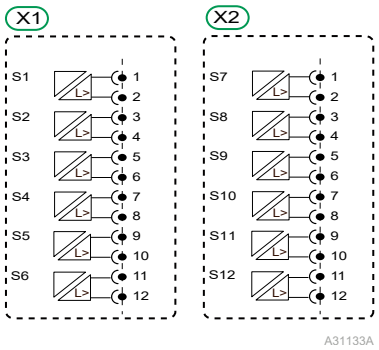

Table 11 - Wiring details

Connector	Applicable cable end	Wire gauge	Tightening torque	Tool
Sensor inputs	 Contact tip length L = 7 mm (0.28 in.)	0.14...1.5 mm² (AWG 26 ...16)	0.22...0.25 N.m *(1.95...2.21 lb-in)*	(—) 2.5 mm (3/32 in.) flat blade screwdriver
Trip outputs and power supply	 Contact tip length L = 7 mm (0.28 in.)	1.5...2.5 mm² (AWG 16...14)	0.5...0.6 N.m *(4.43...5.31 lb-in)*	(—) 3.5 mm (9/64 in.) flat blade screwdriver

NOTE: Use of power supplies without voltage monitoring is not recommended.

ix Industrial® port

The PowerLogic A3 device and the ArcEM card of V321 are equipped with two equivalent ix Industrial® ports. These two ports are used to cascade multiple devices with ArcEM cable. They act also as the interface to configure PowerLogic A3 device by eSetup Easergy Pro with the dedicated configure cable REL52960. The pin numbers of the port are as shown below:

Figure 56 - Pins of the ix Industrial® ports

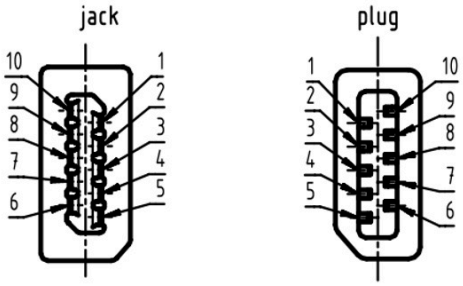

Table 12 - Symbols

Pin NO.	Function
1	-
2	-
3	Eth Comm Rx+
4	Eth Comm Rx-
5	V- Reserved
6	Bus Ground
7	Bus Ground
8	Eth Comm Tx+
9	Eth Comm Tx-
10	V+ Reserved

For full size PowerLogic A3 device equipped with power supply card, there are 24V between the pins No.5 and No.10. This is the unique power source for ArcEM bus. For small size PowerLogic A3 device, the ix Industrial® ports act as the interface taking power from the ArcEM bus.

NOTE: Any A3Sxx device shall be connected to at least one A3Fxx device. A3Sxx is not equipped with power supply.

NOTE: Do not connect modular cables in a closed loop.

NOTE: The accessory configure cable REL52960 (in yellow) is mandatory to be used for the connection between PowerLogic A3 device and the Ethernet port of PC or switch.

5 Installation

Safety instructions

This page contains important safety instructions that should be followed precisely before attempting to install, repair, service or maintain electrical equipment. Carefully read and follow the safety instructions described below. Only qualified personnel, equipped with appropriate personal protection equipment, may work on or operate the equipment. Qualified personnel are individuals who:

- Are familiar with the installation, commissioning, and operation of the equipment and of the system to which it is being connected.
- Are able to safely perform switching operations in accordance with accepted safety engineering practices and are authorized to energize and de-energize equipment and to isolate, ground, and label it.
- Are trained in the care and use of safety apparatus in accordance with safety engineering practices.
- Are trained in emergency procedures (first aid).

⚠⚠DANGER

HAZARD OF ELECTRIC SHOCK, EXPLOSION, OR ARC FLASH

- Apply appropriate personal protective equipment (PPE) and follow safe electrical work practices. See NFPA 70E, NOM-029-STPS-2011, or CSAZ462.
- The arc fault detection system is not a substitute for proper PPE when working on or near equipment being monitored by the system.
- Information on this product is offered as a tool for conducting arc-flash hazard analysis. It is intended for use only by qualified persons who are knowledgeable about power system studies, power distribution equipment, and equipment installation practices. It is not intended as a substitute for the engineering judgement and adequate review necessary for such activities.
- Only qualified personnel should install and service this equipment. Read this entire set of instructions and check the technical characteristics of the device before performing such work.
- Perform wiring according to national standards (NEC) and any requirements specified by the customer.
- Observe any separately marked notes and warnings.
- NEVER work alone.
- Before performing visual inspections, tests, or maintenance on this equipment, disconnect all sources of electric power. Assume all circuits are live until they are completely de-energized, tested, and tagged. Pay particular attention to the design of the power system. Consider all sources of power, including the possibility of back feeding.
- Always use a properly rated voltage sensing device to ensure that all power is off.
- The equipment must be properly grounded.
- Connect the device's protective ground to functional earth according to the connection diagrams presented in this document.
- Do not open the device. It contains no user-serviceable parts.
- Install all devices, doors and covers before turning on the power to this device.

Failure to follow these instructions will result in death or serious injury.

⚠⚠DANGER

HAZARD OF ELECTRIC SHOCK, EXPLOSION, OR ARC FLASH

Always connect the grounding conductor before connecting the power supply.

Failure to follow these instructions will result in death or serious injury.

Always observe the national electrical safety regulations when working under live conditions. The unit manufacturer is not liable for damage due to incorrect working methods or failure to observe safety instructions.

The correct handling of the unit under all mounting and operating conditions forms the foundation for its intended use.

⚠⚠DANGER

HAZARD OF ELECTRIC SHOCK, EXPLOSION, OR ARC FLASH

Do not connect the auxiliary supply voltage until the installation has been completed.

Failure to follow these instructions will result in death or serious injury.

Before installation, make sure the environmental conditions comply with the requirements specified in Environmental characteristics, page 93.

NOTE: The unit contains components liable to damage if exposed to an electrostatic discharge (ESD). Do not open the unit unless you have taken appropriate protective measures against ESD.

⚠WARNING

UNEXPECTED OPERATION

The manufacturer cannot guarantee operational safety in environments that do not satisfy the specified environmental conditions.

Failure to follow these instructions can result in death, serious injury, or equipment damage.

NOTICE

UNEXPECTED DEVICE DOWN

Power the device with auxiliary power supply. Do not power the device by primary network.

Failure to follow these instructions can result the device down when the primary network is power off.

Transport, handling and storage

Transport

In its original packing, a PowerLogic A3 device can be shipped to any destination by all usual means of transport.

If installed in a cubicle, a PowerLogic A3 device can be transported by all usual means of transport in the customary conditions used for cubicles. Storage conditions should be taken into consideration for a long period of transport.

Handling

The PowerLogic A3, although generally of robust construction, requires careful handling: handle it in its original packing in order to help to protect it from shock.

To avoid the device fall down when installed to a cubicle, make visual inspection of the fixation before energizing.

Storage

NOTICE

WATER DAMAGE

- Do not expose the products to sustained humidity during storage.
- Where electrical equipment is being installed, allow sufficient time for acclimatization to the ambient temperature of the environment before powering on.

Failure to follow these instructions can result in reduced lifetime.

If PowerLogic A3 devices are not to be installed immediately upon receipt, they should be stored in a place free from dust, humidity and moisture in their original packaging. The PowerLogic A3 can be stored in its original packaging, in an appropriate location under the followed condition:

- Temperature between -40°C and +80°C (between -40°F and +176°F)
- Humidity < 90%

Care should be taken on subsequent unpacking so that any dust collected on the carton does not fall inside. In locations of high humidity, the carton and packing may become impregnated with moisture that the de-humidifier crystals will lose their efficiency.

Periodically, on an yearly basis checking of the environment and the packaging condition is recommended.

Once the PowerLogic A3 has been unpacked, it is recommended to energize the device as soon as possible in an appropriate environment in terms of temperature, humidity and pollution.

If it is installed in a cubicle, keep the cubicle protection packing as long as possible. It should not be stored in a damp environment for more than a month. It should be energized as quickly as possible. If this is not possible, the cubicle reheating system should be activated.

Unpacking

Equipment receipt

NOTICE

PRODUCT TAMPERING

Our products leave our factory in closed, sealed original packaging. At delivery, if the packaging is opened or the seal is broken, the confidentiality and authenticity of the information contained in the products cannot be ensured.

Failure to follow this instruction can result in compromised confidentiality and authenticity of the information contained in the products.

The PowerLogic A3 is shipped in a cardboard box which helps protect it against any shocks received in transport.

PowerLogic A3 devices that are supplied unmounted and not intended for immediate installation should be returned to original boxes.

Package contents

Each PowerLogic A3 is delivered in an independent package containing:

- A PowerLogic A3 arc flash protection unit
  - **1a-1**: PowerLogic A3F6P
  - **1a-2**: PowerLogic A3F12P
  - **1b-1**: PowerLogic A3S6P
  - **1b-2**: PowerLogic A3S12P
- **2**: A production testing certificate
- **3**: An installation sheet providing main information about installation and use
- **4**: One to two bags including a set of accessories
  (× 1 : A3F6P and A3S6P; × 2: A3F12P and A3S12P)
  - a: Screw for ground connection × 3
  - b: Washer for ground connection × 3
  - c: Ground bar mounting screw × 2
- **5**: One to two ground bars
  (× 1: A3F6P and A3S6P; × 2: A3F12P and A3S12P)

Figure 57 - PowerLogic A3 package contents

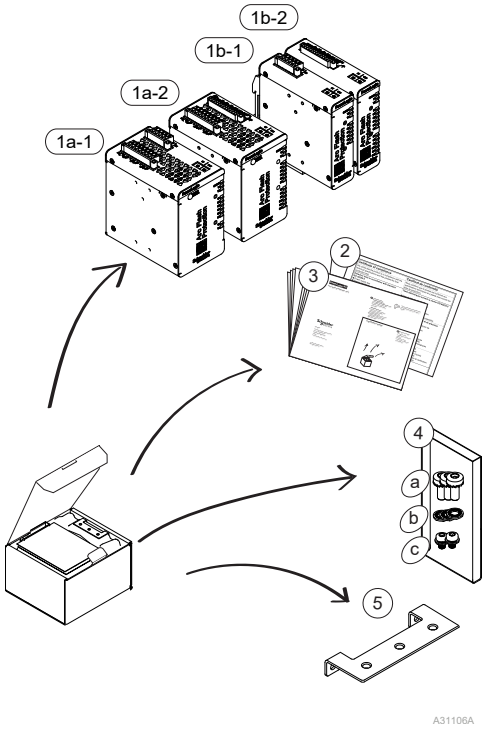

Equipment identification

Different kinds of labels are used on the PowerLogic A3 to identify its model type and contain safety instructions.

Figure 58 - Label examples on the PowerLogic A3

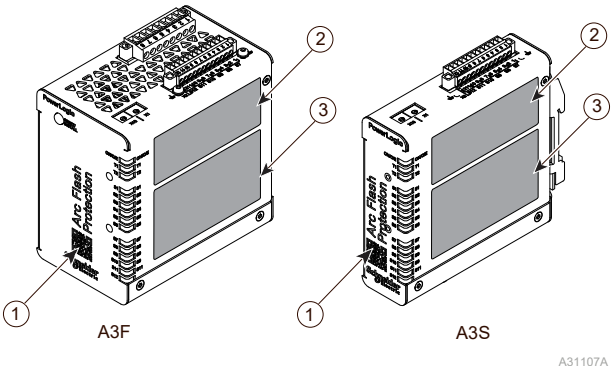

1. QR code label
2. Product label
3. Instruction label

Scan the QR code with **mySchneider** application or other scanner to access the specific product website to get basic product documents and product life cycle documents like Certificate of Conformity and Test.

The product label contains the serial number, the model number, technical data and certification information.

Figure 59 - Example of a product label

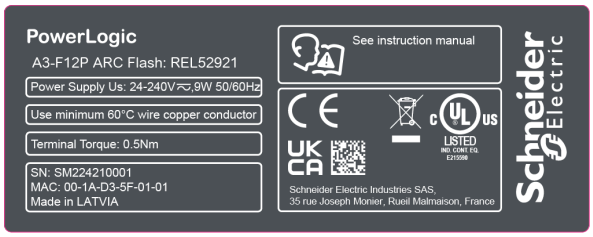

The instruction label contains the safety instructions for the operations of PowerLogic A3.

Figure 60 - Example of an instruction label

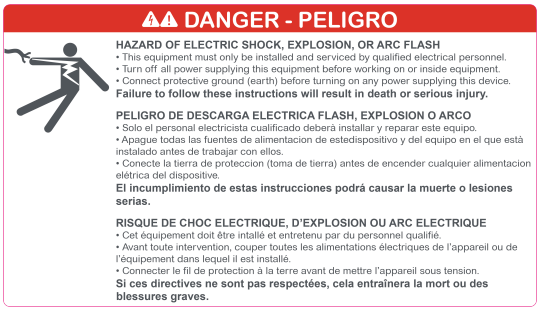

Operating environment

NOTICE
POTENTIAL DAMAGE FROM ENVIRONMENTAL CONDITIONS • The device should be installed in an environment within the specified operation temperature and humidity. • The device may not operate correctly if condensation occurs on the electronic boards inside the device. **Failure to follow these instructions can result in equipment damage.**

The PowerLogic A3 is intended for indoor installation and use only. If it is required for use in an outdoor environment, it should be mounted in a specific cabinet that will enable it to meet the requirements of IEC 60529 with the classification of protection degree IP54 (dust and splashing water protected).

The temperature/relative humidity factors should be compatible with the environmental withstand characteristics of the PowerLogic A3:

Ambient temperature range, in operation:	-40...+70°C (-40...+158°F)
Relative air humidity:	< 90%
Maximum operating altitude:	2000 m (6561.68 ft)
No condensation.	

If the operating conditions are outside the normal range, special arrangements should be made before commissioning, such as air conditioning of the premises.

A contaminated industrial atmosphere (such as the presence of chlorine, hydrofluoric acid, sulphur, solvents, etc.) can cause corrosion of the electronic components and terminals, in which case environmental control arrangements should be made (such as pressurized premises with filtered air, etc.) before commissioning.

To improve robustness of PowerLogic A3 devices against such environment, all the electronic boards of devices have a conformal coating.

Dimensions

Dimensions of the PowerLogic A3 are shown below:

Figure 61 - PowerLogic A3F6P and A3F12P dimensions

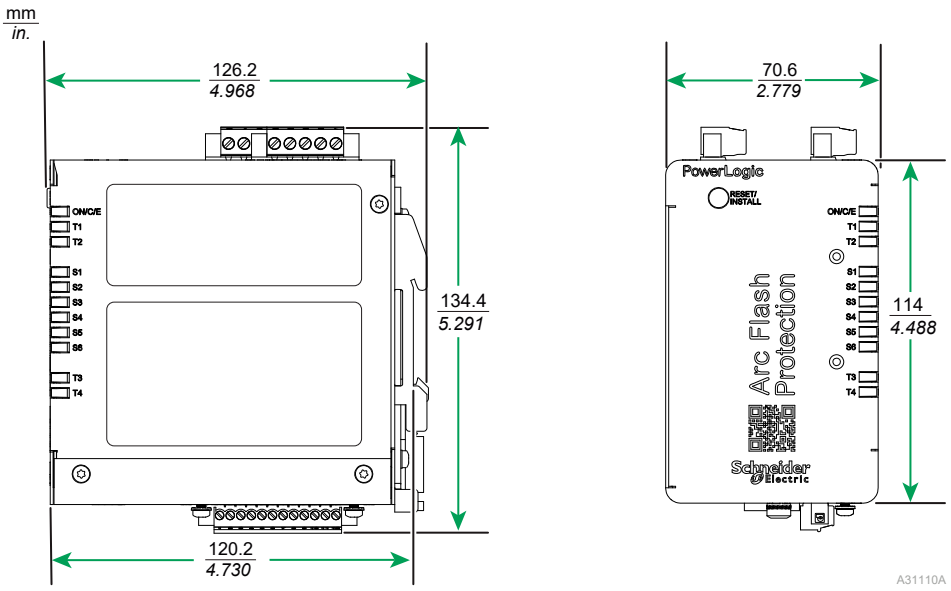

Figure 62 - PowerLogic A3S6P and A3S12P dimensions

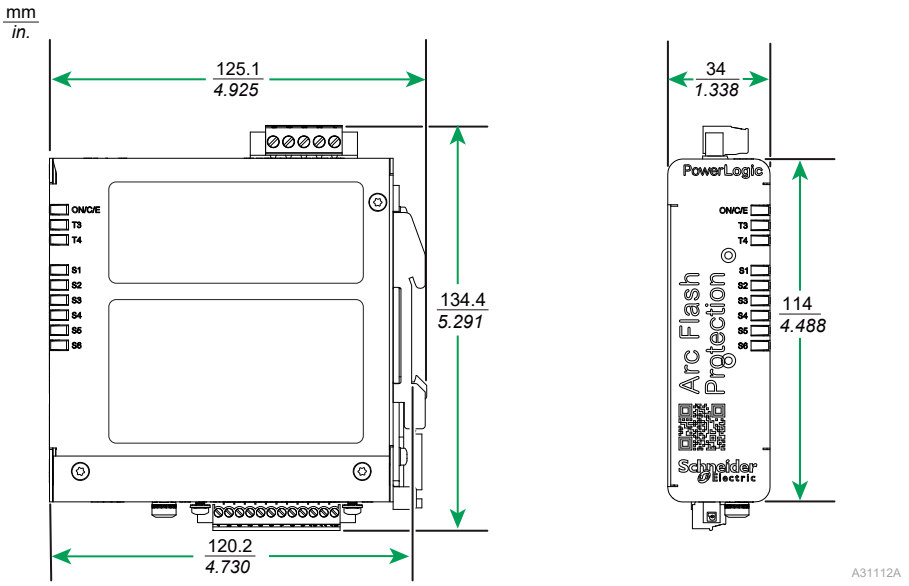

Mounting

⚠CAUTION

CUTS AND PHYSICAL IMPACT

- Wear gloves and safety shoes.
- Trim the edges of the cut-out plates to remove any jagged edges.

Failure to follow these instructions can result in injury or equipment damage.

DIN rail mounting

The PowerLogic A3 can be directly mounted onto DIN rail.

Figure 63 - PowerLogic A3F DIN rail mounting (PowerLogic A3F12P shown as an example)

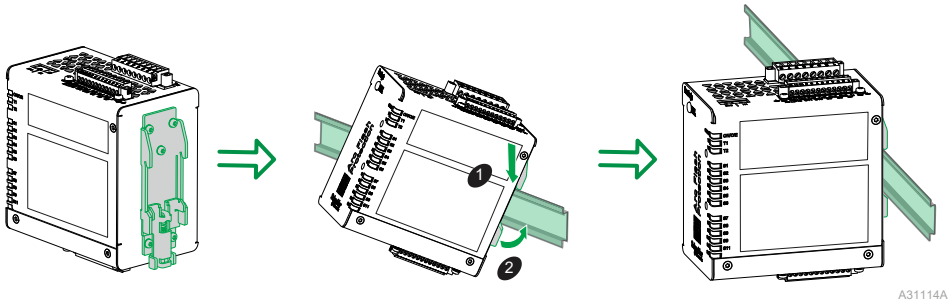

Figure 64 - PowerLogic A3S DIN rail mounting (PowerLogic A3S12P shown as an example)

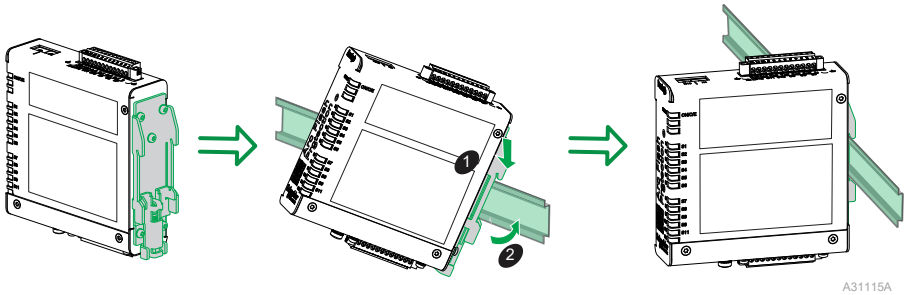

The DIN rail mount mechanism can be installed on another position of the device enclosure.

Figure 65 - Installing the DIN rail mount mechanism on another position of the device enclosure (PowerLogic A3F12P and A3S12P shown as examples)

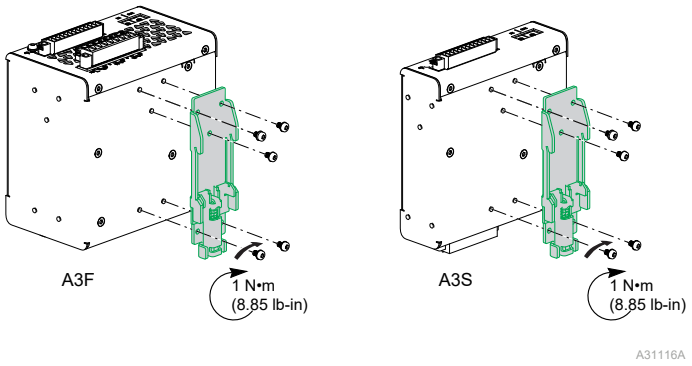

Panel mounting

The PowerLogic A3 can be mounted onto panels with the provided door mounting bracket. Door mounting bracket supports installation to a door for easy access of system status data.

Mounting procedure
(PowerLogic A3F12P and A3S12P shown as examples in the figures)

1. Prepare the cut-out in the panel according to the following dimensions.

Figure 66 - Cut-out on the panel for PowerLogic A3F/A3S

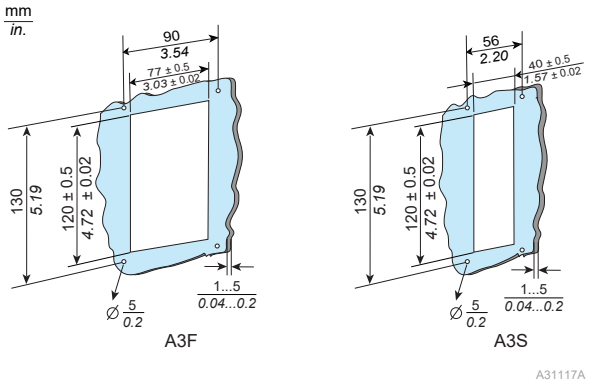

2. Remove three screws according to the figure below. Insert the door mounting bracket (REL52903 for use with PowerLogic A3F, REL52902 for use with PowerLogic A3S).

Figure 67 - Inserting the door mounting bracket

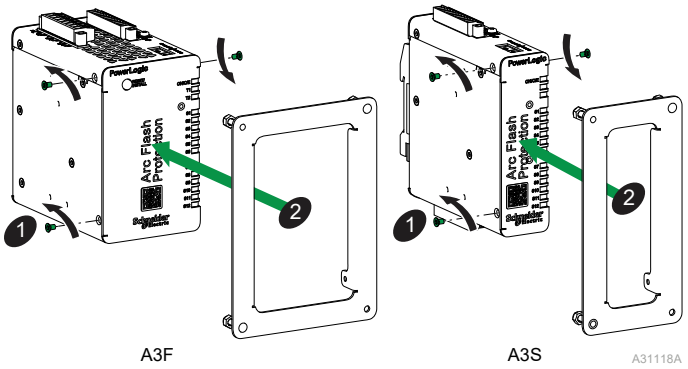

3. To fix the door mounting bracket onto the device, install back the three screws removed in previous step.

Figure 68 - Fastening the door mounting bracket

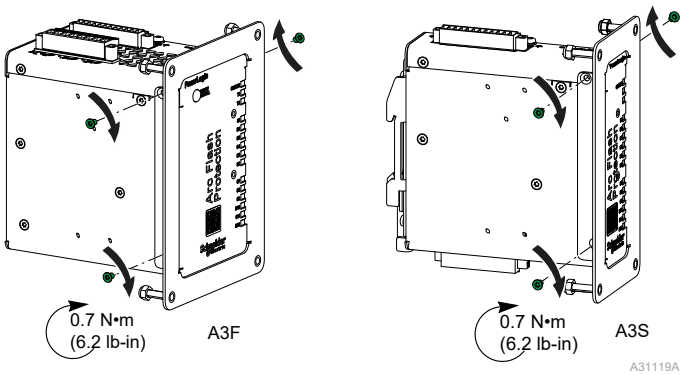

Figure 69 - Dimensions

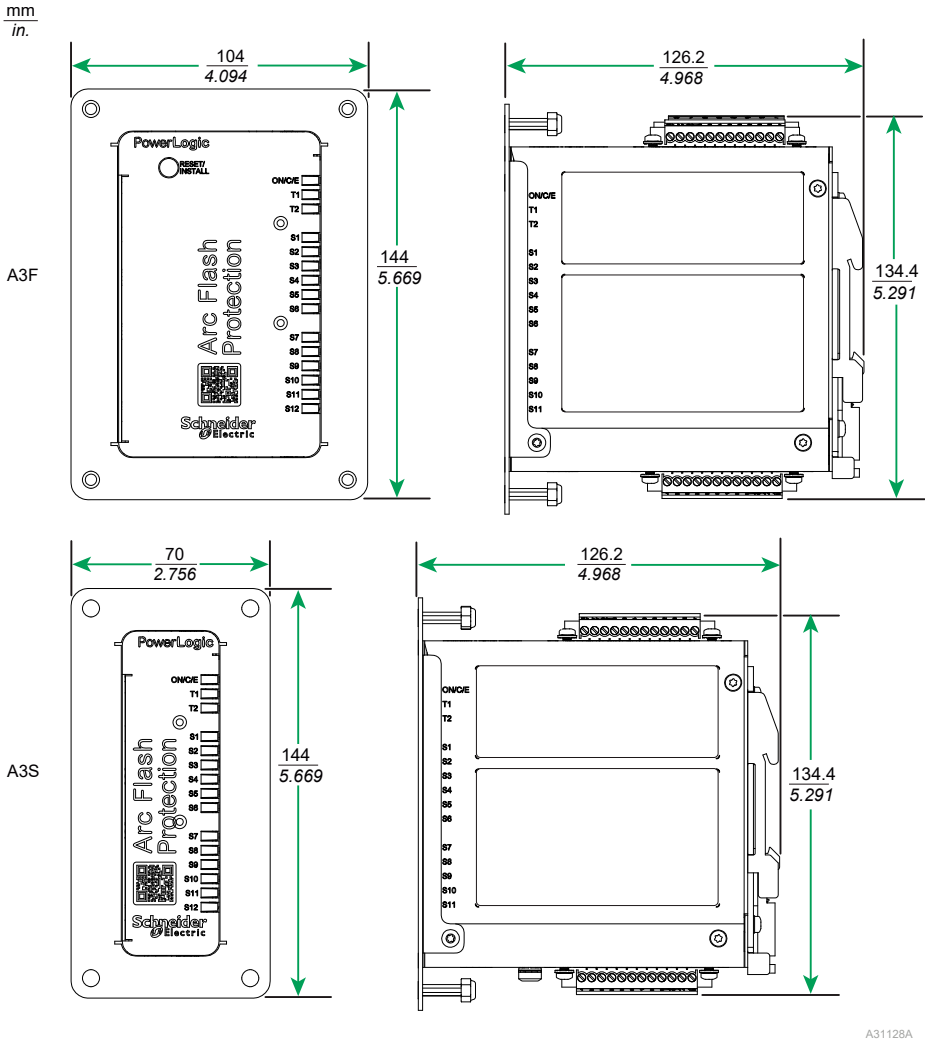

4. Remove four screws at the door mounting bracket first. Fasten the device onto the panel using the four screws removed just now.

Figure 70 - Fastening the device onto panel

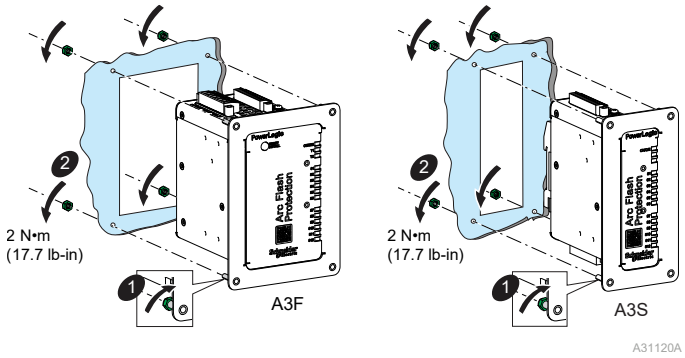

The gap between two devices installed on the same panel should be more than 10 mm (0.39 in.).

Figure 71 - Gap between two devices

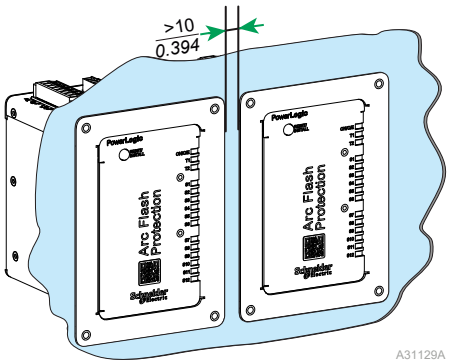

Grounding

⚠⚠DANGER

HAZARD OF ELECTRIC SHOCK, EXPLOSION OR ARC FLASH

- Connect the PowerLogic A3 to ground with a nut and washer provided using any of the indicated ground connection positions (see Ground connections on the PowerLogic A3F, page 67 and Ground connections on the PowerLogic A3S, page 67).
- Check equipotential grounding network and test ground during installation.

Failure to follow these instructions will result in death or serious injury.

Ground bar and a set of accessories including ground bar mounting screws, screws and washers for ground connection are provided in the package box, see Equipment receipt, page 58. Install the provided ground bar onto the device using the provided screws, so that the ground connections are accessible on several positions of the devices. The shielded sensors, for example VA 1 DA-6S (see Accessories, page 107), the shield shall be connected to the ground bar, therefore the ground bar shall be installed. The unshielded sensors do not need grounding, the ground bar can be not installed.

Figure 72 - Installing the ground bar

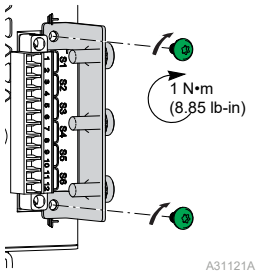

Figure 73 - Ground connections on the PowerLogic A3F

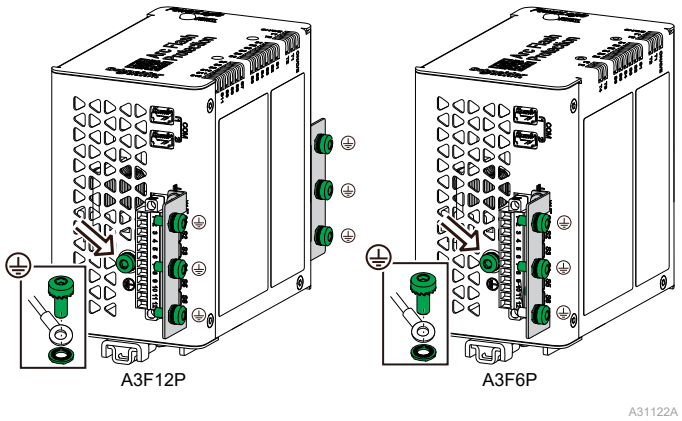

Figure 74 - Ground connections on the PowerLogic A3S

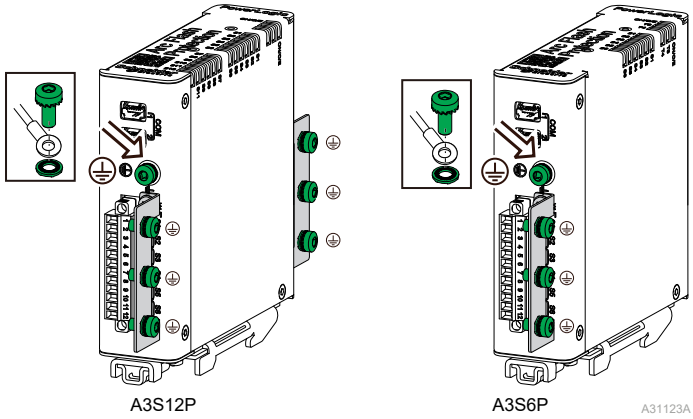

Terminal type	Applicable cable end	Wire gauge	Tightening torque	Tool
Ground stud	Ø = 4...6 mm (0.16...0.24 in.)	Min. 2.5 mm² (AWG 12)	1.5 N.m (13.28 lb-in)	Socket wrench for M4 screw

Install the arc sensors

Mount the sensors on the switchgear in such a way that they cover the light group as completely as possible. The line of sight should be free between the sensor and the supervised area.

If point sensors are used in open compartments (such as bus-bar sections), there should be a sensor approximately every five meters. Due to the wide detection

range of the sensors and the light reflection inside the switchgear, the mounting position is not critical.

The sensors are delivered with 6 m (19.68 ft) standard cables or 20 m (65.61 ft) shielded cables (to be specified in the order).

After mounting the sensors, connect them to PowerLogic A3 devices by the following operations:

1. Draw the wire to the nearest device through the possible shortest route and cut it to a suitable length.

   NOTE: Take into account the wiring methods inside the equipment. This should be compliant with local regulations.

2. Connect the arc sensors to the screw terminals according to the connector pin diagram (see Connector terminals, page 52). The polarity of the arc sensor cables is not critical.

VA 1 DA arc flash sensor

⚠DANGER

HAZARD OF NON-DETECTED LIGHT

Clean the arc flash sensor periodically as instructed in its user manual and after an arc flash fault.

Failure to follow these instructions will result in death or serious injury.

VA 1 DA is a point-type arc flash sensor. The sensor is activated by strong light. It transforms the light information into the current signal that is used by the device to detect arc flash light.

Figure 75 - Sensor dimensions

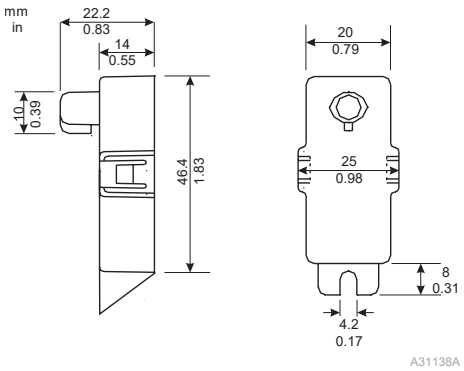

The sensor features include:

- standard 8000...10000 lux visible light sensitivity
- wide area arc flash detection
- maximum 2 ms detection time
- standard cable length 6 m (19.68 ft) or 20 m (65.61 ft) (cut to length on site)
- easy to install (two-wired non-polarity sensitive connection)

⚠DANGER

HAZARD OF NON-DETECTED LIGHT

Never attempt to extend the length of arc flash sensor cables.

Failure to follow these instructions will result in death or serious injury.

Mounting the sensors to the switchgear

Install arc flash sensors inside the switchgear. There are two options for mounting the sensors:

- in customer-drilled holes on the switchgear
- on VYX001 Z-shape or VYX002 L-shape mounting plates available from Schneider Electric or locally fabricated from supplied drawings

Figure 76 - VYX 001 mounting plate for sensor

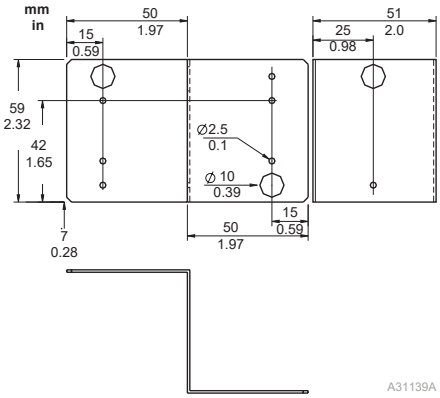

Figure 77 - VYX 002 mounting plate for sensor

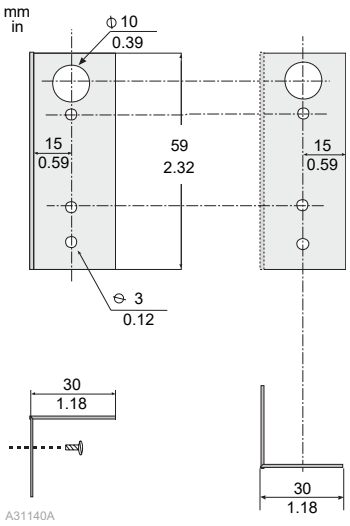

Figure 78 - Mounting the sensor

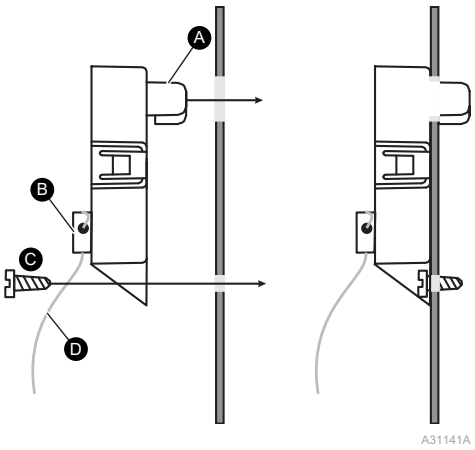

A	Active part of the sensor	B	Cable clamp
C	Fastening screw M4 x 15 mm	D	Sensor cable

1. Press the active part of the sensor through the 10 mm (0.393 in) hole in the panel surface.
2. Fix it using a M4 screw.

VA 1 EH

Install the arc flash sensor onto the switchgear wall from the outside. Press the active part of the sensor through the 10.5 mm (0.413 in) hole in the wall.

The surface mounting of the sensor is also accepted. To do this, push the sensor into a plastic mounting tube and fix it with heat shrink tubing.

NOTE: The sensor should not be exposed to direct sunlight or other strong light. Do not mount the sensor directly under a light source.

Figure 79 - Arc sensor VA 1 EH



6 Configuration

Introduction of configuration methods

As introduced in the chapters Introduction, page 11 and Use, page 21, the operation of PowerLogic A3 requires mainly the configuration of the following parameters and commands:

- Protection scheme
- Light group
- Current group
- Output relay latch or not
- Install/Reset command

According to the application scenarios of PowerLogic A3, there are three methods to configure the PowerLogic A3 device:

- **By rotary switch and push button**: It is the method for a single PowerLogic A3 device or a small system as it is quite easy and convenient. The protection scheme and light group depends on the position of rotary switch. The current group is set to default value Group 16. The output relays are in latch mode. Users can implement Install/Reset command by push button in full size PowerLogic A3 device.
- **By configure tool eSetup Easergy Pro directly**: The dedicated configure cable REL52960 which converts the ix Industrial® ports to RJ45 is a mandatory accessory. This method uses Ethernet IP address. All parameters and commands can be configured by the eSetup Easergy Pro. The other settings and functions such as device name edit and force outputs are also supported.
- **By ArcEM Unit Configurator of V321**: In this method, PowerLogic A3 works in I/O peripheral mode, it means the V321 is in the system. The PowerLogic A3 device can be configured through ArcEM configurator embedded in V321 by the front USB port. All parameters and commands are recommended to be configured by V321.

Configure with rotary switch and push button

There are two rotary switches on each PowerLogic A3 device. They are used to set the parameters of protection scheme and light group. Meanwhile, there is a push button on the full size PowerLogic A3 device to implement the reset and install command. With these two physical interfaces, users can complete the configuration of single PowerLogic A3 device or PowerLogic A3 small system. The current group is set to default value Group 16. The output relays are latch mode.

Figure 80 - Rotary switches and push button

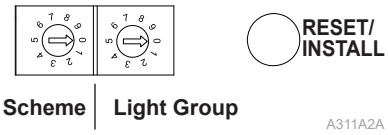

Scheme		Light group	
Position	**Definition**	**Position**	**Definition**
0	Configure with eSetup Easergy Pro	0	N/A
1	Scheme #1	1	Group 1
2	Scheme #2	2	Group 2
3	Scheme #3	3	Group 3

Scheme		Light group	
Position	**Definition**	**Position**	**Definition**
4	Scheme #4	4	Group 4
5	Scheme #5	5	Group 5
6	Scheme #6	6	Group 6
7 - 9	N/A	7 - 9	Group 7 - 9

NOTE: See Protection Schemes, page 23 for schemes available for each model of the PowerLogic A3 range. If the scheme rotary switch is set to invalid positions, the device will be install failed and work in empty scheme without output. Due to the limitation of the position (0 to 9), the available Light Group are 1 to 9.

In this configuration method, the parameters and commands are set by:

- **Protection scheme**: set by the 1st rotary switch which shall be in valid positions (for example the A3S6P, only the positions '1', '2', '4', '6' are valid).
- **Light group**: set by the 2nd rotary switch, the setting value corresponds to the positions. (Position '0' means no Light Group will be sent out)
- **Current group**: set to default value Group 16.
- **Install/Reset**: implemented by push button on full size PowerLogic A3 device.

The normal processes of configuration are as below:

1. Power on the PowerLogic A3 device after completing all physical connections.
2. Rotate the switches to the corresponding positions, the default positions are both ‘0’.
3. Press and hold the button for 3 to 5 s until the ON/C/E LED is changed to orange. Wait for 5 s, all sensor LEDs will be flashing in yellow then extinguish, it means the device or system is installed successfully.
4. Check the status of the device. If the configuration is invalid, for example the scheme rotary switch is in non-defined position, the device or system will be install failed. ON/C/E LED will be in red and T4 will trip. If everything is running normally, only the ON/C/E LED will light up in green.
5. The output relays (T1, T2, T3) will latch if they tripped. Short press the button if you want to reset the trip outputs and the LEDs.

NOTE: The definition of scheme rotary switch position ‘0’ configures the PowerLogic A3 by eSetup Easergy Pro which is explained in the following chapter. When the scheme rotary switch is set to position '0', the 2nd rotary switch is useless. At this time, the value of light group depends on the protection settings in eSetup Easergy Pro.

Configure with eSetup Easergy Pro directly

Overview

⚠WARNING

INOPERABLE DEVICE

Make sure that the reboot of the PowerLogic A3 has no impact on people and equipment.

Failure to follow these instructions can result in death, serious injury, or equipment damage.

eSetup Easergy Pro is a setting and operating software tool for configuring PowerLogic A3 devices, local operation and customisation functions.

The eSetup Easergy Pro software is supplied directly through the Schneider Electric website www.se.com, along with the eSetup Easergy Pro program for recovering all the PowerLogic A3 documentation in PDF format.

When configuring the PowerLogic A3 directly, the eSetup Easergy Pro displays on the graphical interface the parameters and commands grouped under the tab **General** . The displayed contents of the tab depend on the type of device. For example, there are six selection options of protection scheme for A3F6P and A3F12P, four options for A3S6P, and only one option for A3S12P.

The eSetup Easergy Pro supports also making the device configuration by a setting file. The configuration of a physical device is saved in one setting file. The configurations can be printed out and saved for later use.

When starting to work with eSetup Easergy Pro, there are two options corresponding to two operation modes as described below.:

- Open an existing (previously saved) setting file without connecting to a PowerLogic A3 device
- Connect to a PowerLogic A3 device and read the settings from the device.

  NOTE: The accessory configure cable REL52960 (in yellow) is mandatory to be used for the connection between PowerLogic A3 device and the Ethernet port of PC or switch.

Operation modes

The eSetup Easergy Pro software can be used in two operation modes:

- Disconnected mode
- Connected mode

The disconnected mode allows the user to prepare parameters and settings files for the PowerLogic A3 prior to commissioning. The previously saved setting file can be opened as a template to create new configuration for a same type device (Refer to the user manual of eSetup Easergy Pro for more information). The parameter and protection setting files prepared in disconnected mode will be downloaded later to PowerLogic A3 devices in connected mode.

The connected mode is used during commissioning of the PowerLogic A3 devices:

- To upload, download and modify the parameters and settings of PowerLogic A3.

  Refer to the user manual of eSetup Easergy Pro for more information on uploading (writing)/downloading (reading) setting files to/from the connected devices.

  NOTICE

  UNEXPECTED EQUIPMENT OPERATION AND NUISANCE TRIPPING

  After writing new settings, configurations or firmware to a device, perform a test to verify that the device operates correctly with the new settings.

  Failure to follow these instructions can result in reduced lifetime.

- To have all the measurements and supporting data available for commissioning.

  NOTE: The accessory configure cable REL52960 (in yellow) is mandatory to be used for the connection between PowerLogic A3 device and the Ethernet port of PC or switch.

Figure 81 - Connecting PC and PowerLogic A3

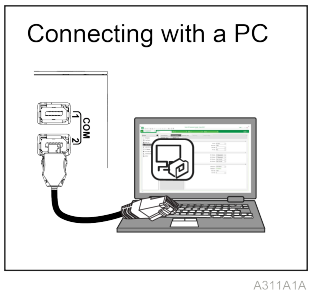

Set up the connection

Before connecting, make sure your PC Ethernet port is configured to obtain IP address by DHCP.

PowerLogic A3 devices use AUTOIP to obtain address from range 169.254.xxx. xxx with the subnet mask 255.255.0.0.

1. Connect the dedicated cable REL52960 to any ix Industrial® port in the system and the PC. Run eSetup Easergy Pro. (See Connecting PC and PowerLogic A3, page 74).
2. On the eSetup Easergy Pro toolbar, click the **ON** connection button. The Login pop-up window opens.
3. Click the **ETHERNET** tab, then click the **scan network** icon to find the devices.
4. Select the right device from the drop-down menu.
5. Click **Connect**. A new window showing the device information will be displayed.
6. Enter the user name and password to login. The main interface of eSetup Easergy Pro will be displayed.

   NOTE: See User accounts, page 74 for default user names and passwords. See Password recovery, page 75 to retrieve your password.

User accounts

By default, there are three kinds of user account for PowerLogic A3 device.

Table 13 - User accounts

User account	User name	Default password	Use
User	user	0	Used for reading parameter values.
Operator	operator	1	Used for installing devices and sensors, changing the protection settings, forcing the relay outputs, for example.
Configurator	conf	2	Needed during the device commissioning. For example, only this user account can disable the install/reset button's function.

NOTICE

UNAUTHORIZED ACCESS

To improve in cybersecurity:

- Change all passwords from their default values when taking the protection device into use.
- Change all passwords regularly.
- Ensure a minimum level of password complexity according to common password guidelines.

Failure to follow these instructions can increase the risk of unauthorized access.

Password recovery

⚠WARNING

INOPERABLE DEVICE

Password recovery of PowerLogic A3 device will clear the device firmware and all your settings. Make sure that the password recovery of the PowerLogic A3 has no impact on people and equipment.

Failure to follow these instructions can result in death, serious injury, or equipment damage.

⚠WARNING

INOPERABLE DEVICE

Make sure that the reboot of the PowerLogic A3 has no impact on people and equipment.

Failure to follow these instructions can result in death, serious injury, or equipment damage.

1. From **Login** page, click **Forget password?**.
2. From **Request** page, click **Read** and click  to copy information.
3. Contact Schneider Electric Customer Care Center (www.se.com/CCC) and provide the copied information.
4. Obtain the password recovery file from Schneider Electric Customer Care Center.
5. From **Restore** page, click **Update firmware**. A caution message appears.

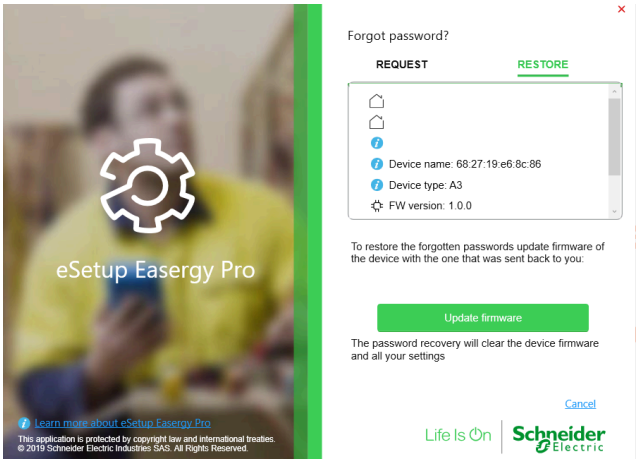

6. Click **Yes** to continue.
7. In the pop-up **Firmware update** page, select the password recovery file obtained from Step 4.
8. In the **Firmware update** page, select the image and click **Update**. **Firmware update progress** window appears.
9. Click **OK** when the update is finished.

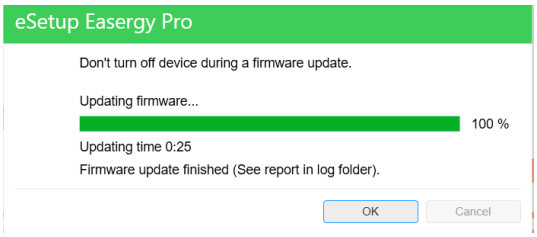

10. Restart PowerLogic A3 device.

Parameters and commands

NOTE: Do remember to rotate the scheme switch to position '0' if you want to change the protection settings. When the scheme switch is in position '0', the 2nd rotary switch light group is useless. The value of light group depends on the protection settings in eSetup Easergy Pro.

Basic parameters

The basic information and parameters are displayed at the beginning of the view, as shown below:

Figure 82 - View of basic information in eSetup Easergy Pro

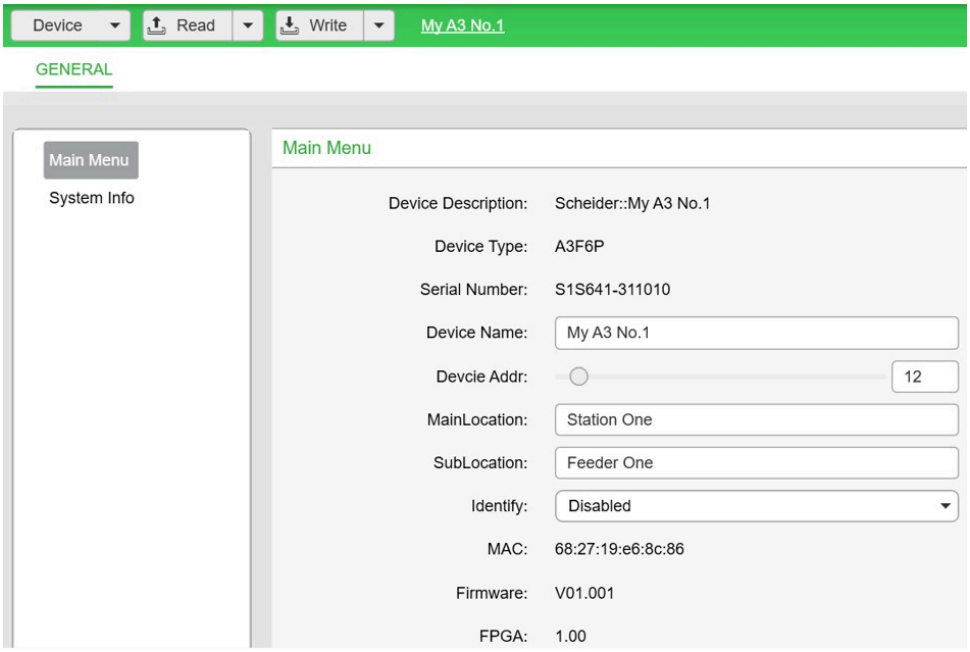

Table 14 - Basic parameters

Parameter name	Value	Description	Attribute
Device Description	-	Same as the device name	Read-only
Device Type	A3F6P, A3F12P, A3S6P, A3S12P	Displays the type of PowerLogic A3 device	Read-only
Serial Number	-	-	Read-only

Table 14 - Basic parameters (Continued)

Parameter name	Value	Description	Attribute
Device Name	Supports up to 19 characters	User can define the PowerLogic A3 device	Write-able
Device Addr	0 -255	Device address, determine the index number when connect to V321	Write-able
MainLocation	Supports up to 19 characters	It is recommended to correspond to bay name	Write-able
SubLocation	Supports up to 19 characters	It is recommended to correspond to bay name	Write-able
Identify	Disabled/Blinking	Usually disabled. All sensor LED will blink in yellow after write *Blinking* so that user can find easily the current device in multiple devices system.	Write-able
MAC	-	MAC address	Read-only
Firmware	-	FW version	Read-only
FPGA	-	FPGA version	Read-only

NOTE: If the device address (**Device Addr**) is updated, an Install command have to be implemented. The Install command is not needed for the updates of other Write-able attributes.

Protection and configuration settings

Go to **General > Main menu**, under **Protection** and **Configuration** group view, change and view arc flash protection settings.

Figure 83 - Protection group view

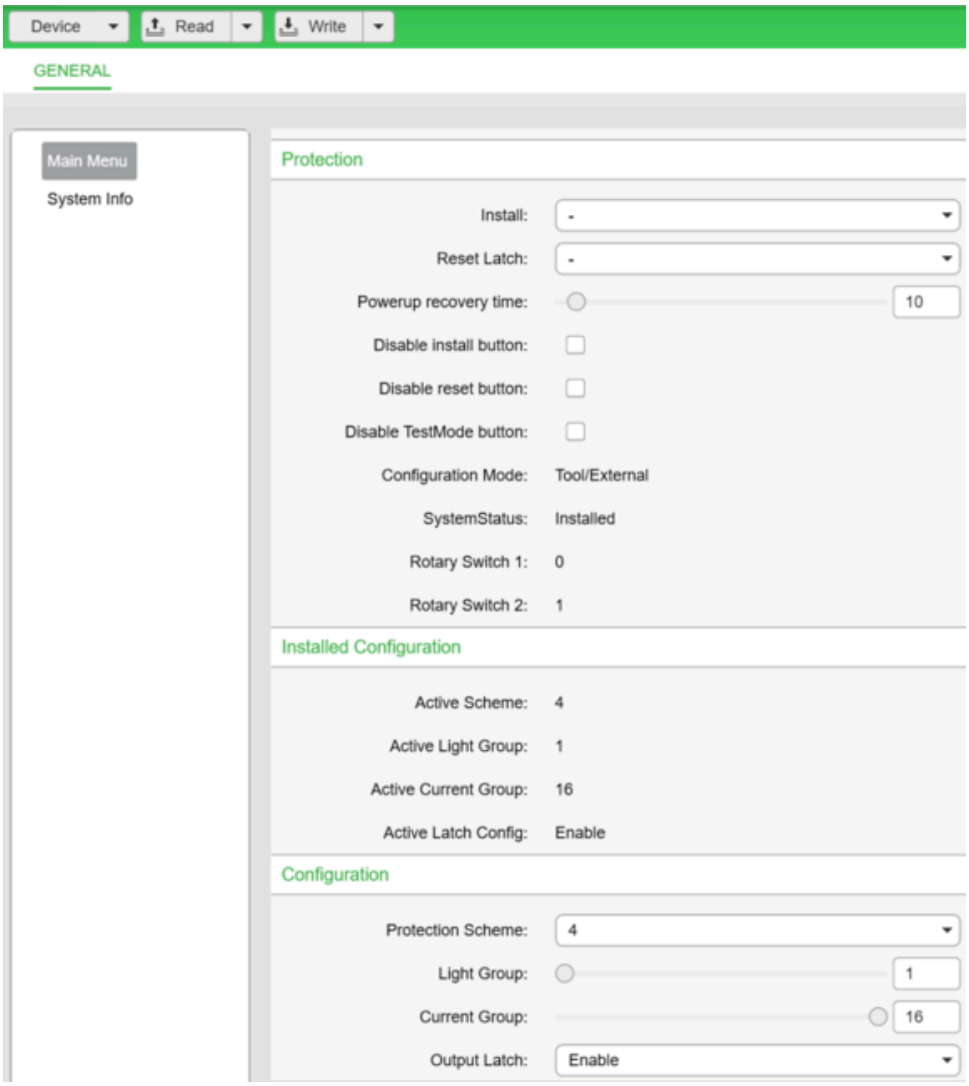

Table 15 - Protection and configuration settings

Parameter name	Default	Value	Description
Install	-	-; Install	Install all connected sensors.
Reset Latch	-	-; Reset	Reset all latched sensors and relays.
Powerup recovery time	10 s	10...255 s	A period when the arc protection system wait for all units been detected. This takes effect when the system has more than one unit.
Disable install button	Off	On; Off	Disable the installing function of the install/reset button.
Disable reset button	Off	On; Off	Disable the resetting function of the install/reset button.
Disable TestMode button	Off	On; Off	Disable the test mode function of the install/reset button.
Configuration Mode	-	Tool/External; Rotary switch	Configure the device by rotary switch or software. When the 1st rotary switch scheme is in position '0', the device uses tool/ external configuration.

Table 15 - Protection and configuration settings (Continued)

Parameter name	Default	Value	Description
			Other positions show configure by rotary switch.
System status	Uninstalled	Uninstalled; Installing; Installed; Install failed	Installation status.
Rotary Switch 1	0	0; 1; 2; 3; 4; 5; 6; 7; 8; 9	The 1st rotary switch scheme stops. When configure with eSetup Easergy Pro, the value shall be 0, corresponding to the physical position '0'. When configuring with rotary switches, the value also corresponds to a physical position which shall be valid.
Rotary Switch 2	0	0; 1; 2; 3; 4; 5; 6; 7; 8; 9	The 2nd rotary switch light group stops.
Active Scheme/Light Group/Current Group/Latch Config			The current installed settings the device is working with
Protection Scheme	1	1; 2; 3; 4; 5; 6	Options of protection scheme. **NOTE:** Only valid options can be selected from the drop-down list. The drop-down lists of A3F6P and A3F12P contain the options ‘1’ to ‘6’. The drop-down list of A3S6P contains the options '1', '2', '4', '6'. The drop-down list of A3S12P contains only option '1'.
Light Group	-	1; 2; 3; 4; 5; 6; 7; 8; 9; 10; 11; 12	Light group.
Current Group	16	13; 14; 15; 16	Current group.
Output Latch	Disable	Disable; Enable	The output relay can be configured as latched or non-latched.

- If the **Configuration mode** value is **Rotary switch**, the values of **Protection Scheme**, **Light Group**, **Current Group** and **Output Latch** are read only.
- If the connected device’s scheme rotary switch is set to **0**, the **Configuration mode** value will be **Tool/External**, the attribute of **Protection Scheme**, **Light Group**, **Current Group** and **Output latch** are write-able.
- The four settings of **Protection Scheme**, **Light Group**, **Current Group** and **Output latch** are critical for normal operation. Re-install is needed when those four settings are changed.

Install command

1. Under **General** tab, select **Main menu**.
2. Under the **Protection** group view, click **Install** drop-down list and select **Install**.
3. Click **Write** on the top.

4. Wait until the **System status** shows **Installed**, all sensor LEDs of the single PowerLogic A3 or PowerLogic A3 system will blink in yellow during the install process. If the configuration are correct, all LEDs will distinguish except the ON/C/E LED lit in green, this status means all sensors are installed and rotary switches' configurations are enabled.
5. Check the **Installed Configuration** is consistent with expectations. Check the sensor status in **Arc Sensor Inputs** group view. Check the status of output relays in **Outputs** group view.

Reset latch command

1. Under **General** tab, select **Main menu**.
2. Under the **Protection** group view, click **Reset latch** drop-down list and select **Reset**.
3. Click **Write** on the top.
4. Check the LEDs of the single PowerLogic A3 or PowerLogic A3 system, both sensor LED and output LED shall distinguish. Check the status of output relays in **Outputs** group view.

   NOTE: Install and Reset command will be transmitted to other PowerLogic A3 device in the system. The two commands can still be implemented by long/ short pressing the physical button on full size PowerLogic A3 device.

Other functions

Diagnostic

The device runs self-diagnostic tests for hardware and software. Check the detected voltage, temperature and humidity under the **Diagnostic** group view.

Figure 84 - Diagnostic

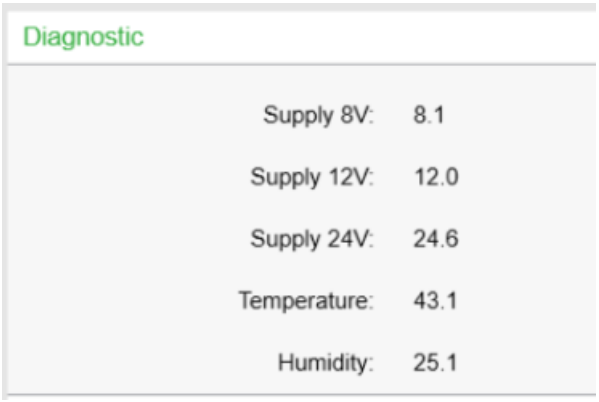

Sensor status detection

Check the arc sensor status under the **Arc sensor inputs** group view. The status value includes **-**, **Connected**, **Disconnected** , **Error** , **Active**, **Daylight** and **HW Fault**. **Connected** means the sensor is installed and well detected. **Active** means the sensor has detected an arc flash. These two status are valid during normal operation. But other status are abnormal, such as **Disconnected** (means sensor lost), the alarm message will be sent out, sensor LED will be blinking in yellow, ON/C/E will turn to red, T4 will trip. The alarm will be sent to the entire system by communication ports.

Figure 85 - Arc sensor inputs

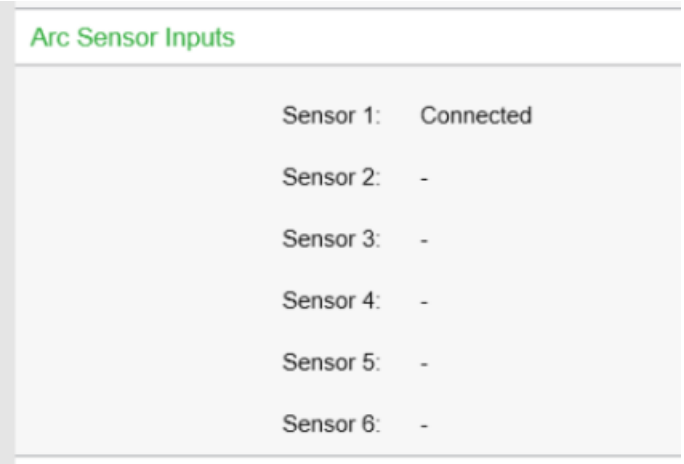

Forcing the relay outputs

1. Go to **GENERAL** > **Main Menu**, under **Outputs** group ,enter *1* in the **OutputsForce** field. Click **Write** on the top.
2. Click the checkbox besides the relay's name, click **Write**. The corresponding output relay and its LED will be activated.
3. Remove the mark in checkbox, click **Write**. The corresponding output relay and its LED will be deactivated.

   NOTE: The outputs forcing mode keep valid for 10 minutes only. The **OutputsForce** field will turn to "0" automatically in 10 minutes.

Figure 86 - Outputs

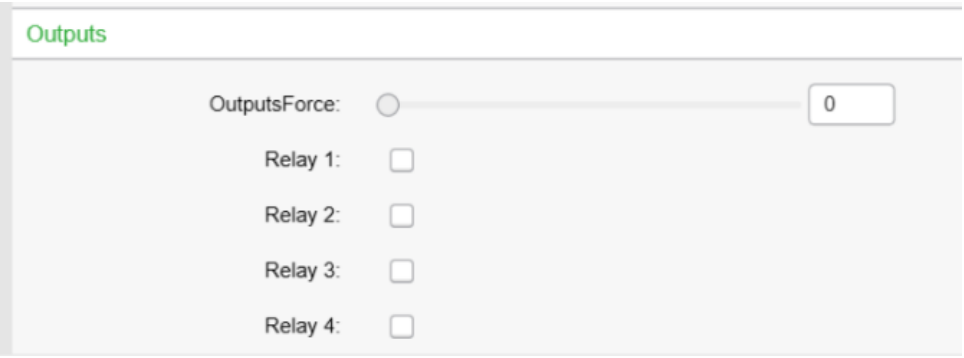

Steps of configuration

Step 1: Physical connection.

⚠⚠DANGER

HAZARD OF ELECTRICAL SHOCK, EXPLOSION, ARC FLASH AND FIRE

Before connecting the devices, disconnect the supply voltage to the unit.

Failure to follow these instructions will result in death or serious injury.

Cascade the PowerLogic A3 devices by their ix Industrial®ports with ArcEM cable. Finish wring including sensor inputs. Connect configure cable REL52960 to any empty ix Industrial® port and RJ45 of PC. Turn on the power supply of PowerLogic A3 devices.

Step 2: Set up the connection.

Click the **ON/OFF** button on the toolbar. In **ETHERNET** tab, select the device according to their IP address. The device type, order code and other information are also displayed if the sub-menu is opened. Click the **Connect** button, enter user accounts and password, the connection will be built and parameters will be uploaded from the device.

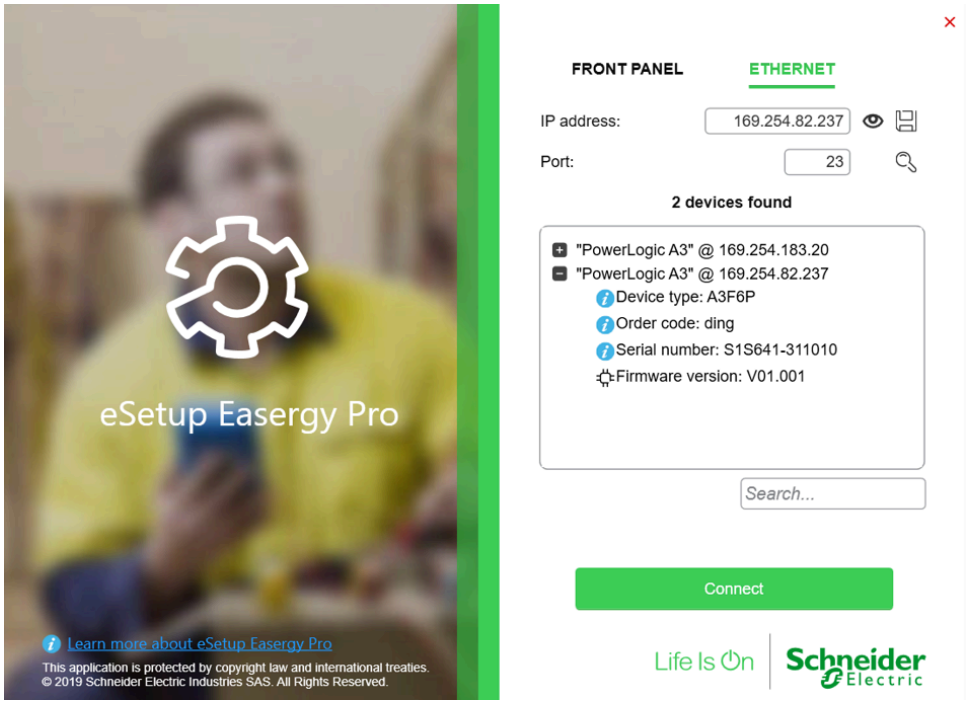

Step 3: Configure the device.

Change the basic parameters and protection settings. The 1st rotary switch shall be in position '0' if you want to change the four protection settings: **Protection Scheme**, **Light Group**, **Current Group** and **Output Latch**.

Step 4: Download the configuration to the device.

Click the **Write** button to download the parameters and settings to device.

Step 5: Implement install command.

Select **Install** and click **Write** to implement the install command. All sensor LEDs of the PowerLogic A3 system will blink for 3 seconds during installation. If the configuration is valid, the system status will be displayed as *Installed* and all LEDs will be deactivated except the ON/C/E lit in green. The install command can also be implemented by long pressing the button on full size PowerLogic A3 device, which is the same as configure with rotary switch and push button.

Step 6: Check the status of the system.

Check and ensure the configuration is completely consistent with expectations. Save the configuration to .epz file for later use.

Configure with ArcEM Configurator in V321

When PowerLogic A3 work as I/O peripherals of V321, it is recommended to configure A3 devices in V321 by front USB port connection. There is a dedicated menu for configuration of A3 devices, named ARC **ArcEM Unit Configurator** in **Protection** page (see V321 user manual).

ARC ArcEM Unit Configurator

Check all PowerLogic A3 scheme rotary switches are in '0' position before set up the connection between eSetup Easergy Pro and V321. Write **Install** command in **Protection**/**Arc protection** menu. Go to **Protection**/**ARC ArcEM Unit Configurator**, the A3 devices connected to V321 will be listed here. All the A3 critical parameters such as Device name, Device address, Protection scheme, Light Group, Current Group, identify function, Relay latch, and so on can be configured in this menu.

Figure 87 - ARC ArcEM Unit Configurator

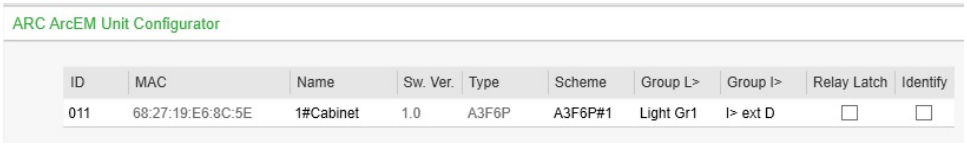

Table 16 - Parameters of PowerLogic A3 in ArcEM Unit Configurator

Name	Description	Attribute
ID	A3 device address. Determine the index of the device. This value also contained in IEC61850 LN of related A3 device. Value range from 0 to 255.	Writable
MAC	Mac address of A3 device.	Read-only
Name	Device name of A3 device.	Writable(7)
Sw. Ver.	Software version of A3 device.	Read-only
Type	A3 device type: A3F6P, A3S6P, A3F12P, A3S12P	Read-only
Scheme	Protection scheme of A3 device. **Extremely important** parameter of A3 device. There are 6 protection schemes (#1, #2, #3, #4, #5, #6) in A3F6P and A3F12P, 4 schemes (#1, #2, #4, #6) in A3S6P, and only 1 protection scheme (#1) in A3S12P. Select accurate value according to application scenario. Details see Protection Schemes, page 23.	Writable
Group L>	Light group in which the A3 device is working. **Extremely important** parameter of A3 device. Range from ArcEM Group 1 to 12.	Writable
Group I>	Current group in which this A3 device is working. **Extremely important** parameter of A3 device. Range from ArcEM Group 13 to 16.	Writable
Relay Latch	Set the outputs (T1, T2, T3) of A3 device latch or not	Writable
Identify	Identification of the A3 device.	Writable

NOTE: The ID is the address of the PowerLogic A3 devices, the ID must be unique in one system.

ARC ArcEM Bus

In **Protection**/**ARC ArcEM Bus**, you can make setting to let V321 forward its overcurrent information to Current Groups (only Group 13 to 16 available) for PowerLogic A3 to use. Another setting allows A3 units to reset latches. In the middle of this menu, all Groups status in ArcEM bus are displayed, including Light Groups (Group 1 to 12) and Current Groups (Group 13 to 16). Also, some signals of abnormal status related to ArcEM bus can be linked to self-diagnostic at the bottom of this menu. For example, link the signal of ArcEM I/O sensor lost to self-diagnostic **ArcEM I/O** signal in the list of **Selfdiag Signal Configuration** of **Device**/**Test.**

(7) 10 characters maximum, without space.

Figure 88 - Overcurrent information forwarding

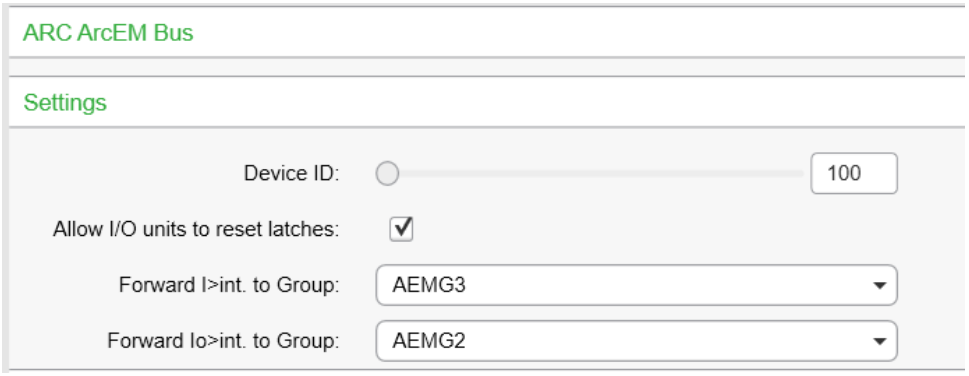

Figure 89 - Groups for Light and Groups for Current

Groups for Light

Group	State	Label	Description
1	0	ArcEM 1	ArcEM G1
2	0	ArcEM 2	ArcEM G2
3	0	ArcEM 3	ArcEM G3
4	0	ArcEM 4	ArcEM G4
5	0	ArcEM 5	ArcEM G5
6	0	ArcEM 6	ArcEM G6
7	0	ArcEM 7	ArcEM G7
8	0	ArcEM 8	ArcEM G8
9	0	ArcEM 9	ArcEM G9
10	0	ArcEM 10	ArcEM G10
11	0	ArcEM 11	ArcEM G11
12	0	ArcEM 12	ArcEM G12

Groups for Current

Group	State	Label	Description
1	0	ArcEM 13	ArcEM G13
2	0	ArcEM 14	ArcEM G14
3	0	ArcEM 15	ArcEM G15
4	0	ArcEM 16	ArcEM G16

Figure 90 - Links to Arc SelfDiag

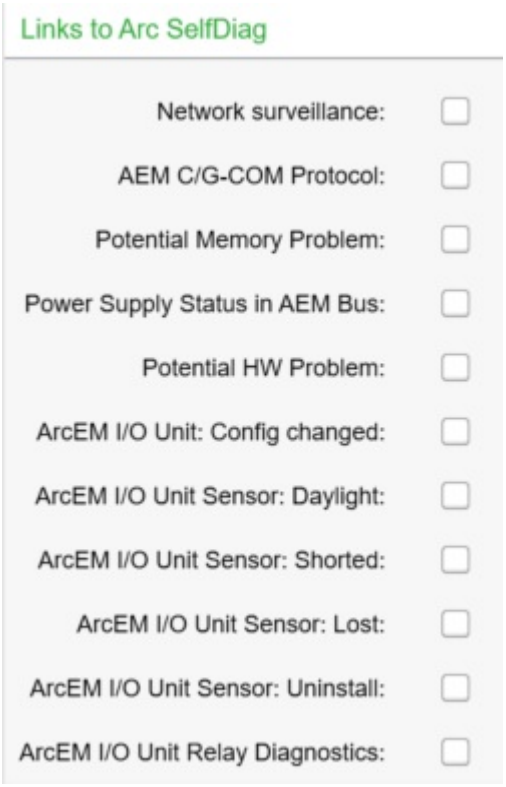

Figure 91 - SelfDiag Signal Configuration

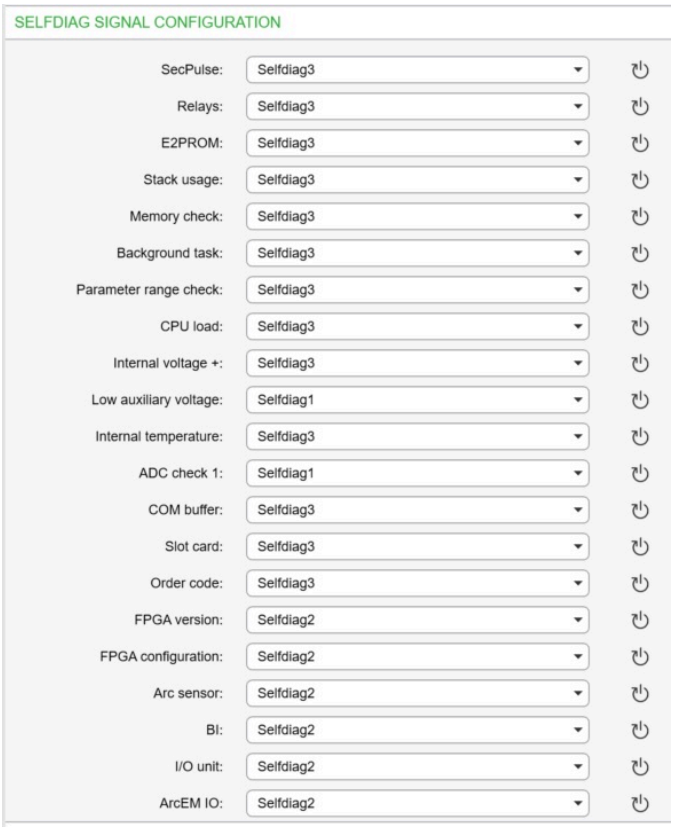

Table 17 - Parameters of ARC ArcEM Bus

Name	Default Value	Range	Description	Attribute
Device ID	254	100 - 254	The address of V321 in ArcEM bus	Writable
Allow A3 to reset latches	On	On/Off	Allows A3 units to reset latches	Writable
Forward I>int. to Group	None	None, ArcEM Group 13 - 16	Forward phase overcurrent information to ArcEM bus for A3 use	Writable
Forward Io>int. to Group	None	None, ArcEM Group 13 - 16	Forward residual overcurrent information to ArcEM bus for A3 use	Writable
Groups for Light	-	-	The status of Light Groups 1 - 12 in ArcEM bus	Read-only
Groups for Current	-	-	The status of Current Groups 13 - 16 in ArcEM bus	Read-only
Links to Arc Selfdiag	On	On/Off	Abnormal status of ArcEM bus link to self-diagnostic signal	Writable

Configuring arc protection settings of the V321

Go to **Protection > ARC protection**, the following arc protection settings of the V321 can be configured:

Figure 92 - Arc Stages

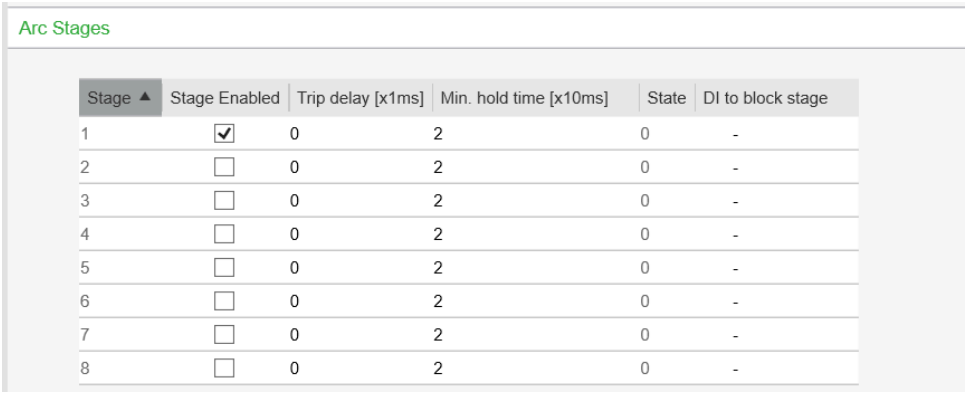

Table 18 - System overview parameters

Parameter name	Default	Range	Description
Stage	-	1...8	Stage No.
Stage Enabled	-	On, Off	Enable the arc protection stage.
Trip delay	0	0...255 ms	Trip delay for the arc protection stage
Min. hold time	2	2...255 x 10 ms	Minimum trip pulse length for the arc protection stage (Overshoot time 35 ms)

Table 18 - System overview parameters (Continued)

Parameter name	Default	Range	Description
State	0	On, Off	Stage state: tripped or not tripped.
DI to block stage	-	DI1...DI6; F1, F2; VI1...VI20; VO1...VO20; GOOSE NI1... GOOSE NI64;	DI used to block stage

Arc matrix – light

The arc flash light matrix is used for connecting light signals detected by sensors or Goose or any virtual inputs to the different stages of the arc flash detection function.

In the **Arc matrix – light** setting view, the available arc light signals (left column) are linked to the appropriate arc stages (1...8).

Figure 93 - View of arc matrix – light

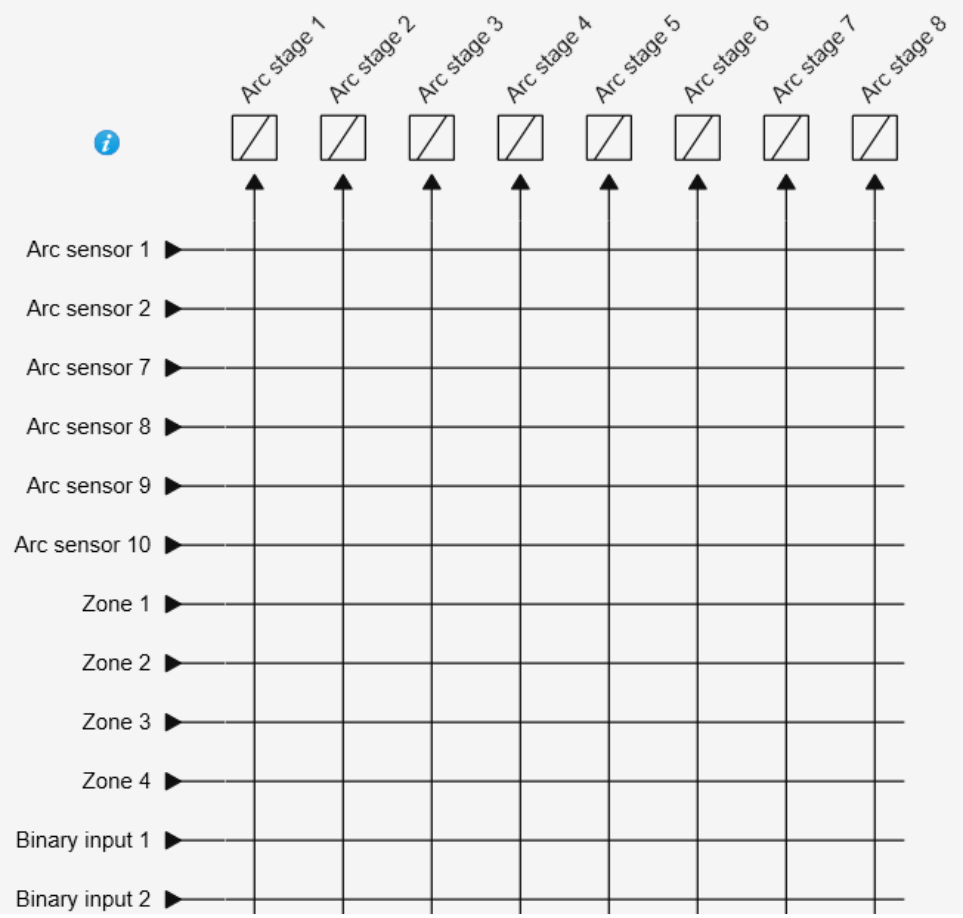

Table 19 - Arc matrix – light parameter group

Item	Range	Description
Arc sensor 1... X	On; Off	Internal arc flash sensor 1...X; X is depending on the V321 order code.
Zone 1...4	On; Off	Zone information for Arc I/O bus (VAM I/O unit)
Binary input 1...X	On; Off	Binary input. X is depending on the V321 order code.

Table 19 - Arc matrix – light parameter group (Continued)

Item	Range	Description
GOOSE NI	On; Off	Goose network input.
Virtual output 1...6	On; Off	Virtual output.
ArcEM G1...G12	On; Off	Light Group information in ArcEM bus (from PowerLogic A3)

Arc matrix – output

The arc flash output matrix is used for connecting the different arc stage signals to the outputs.

In the **Arc matrix – output** setting view, the used arc stages (1...8) are connected to the required outputs. Possible latched function per output is also determined in this view. The available outputs depend on the V321 order code.

The matrix connection done in the **Arc matrix – output** view also becomes visible in the output matrix.

Figure 94 - View of arc matrix – output

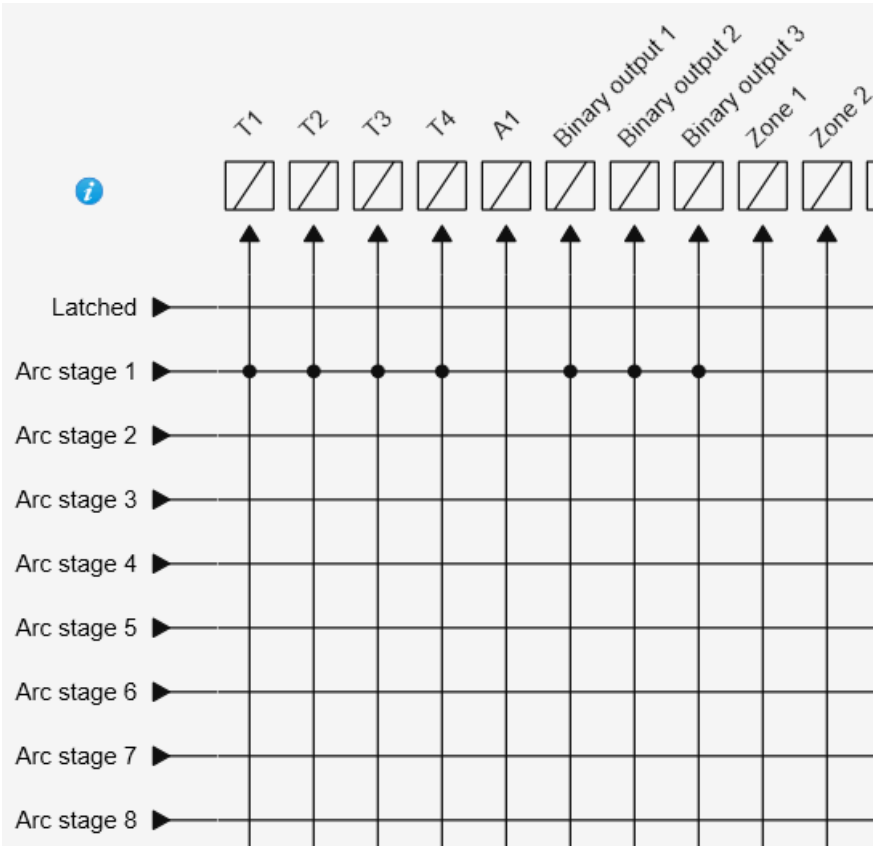

Table 20 - Arc matrix – output parameter group

Item	Range	Description
Latched	On; Off	Output latch.
Arc stage 1...8	On; Off	Arc protection stage 1...8.
T1 ...T4	On; Off	Trip digital output 1...4.
A1	On; Off	Signal alarm relay 1.
Binary output 1...X	On; Off	Binary output. X is depending on the V321 order code

Table 20 - Arc matrix – output parameter group (Continued)

Item	Range	Description
Zone 1...4	On; Off	Zone information for Arc I/O bus (VAM I/O unit)
I>ext.	On; Off	External I overcurrent signal
ArcEM G1...G16	On; Off	Group information for Arc EM bus (PowerLogic A3 units)

Arc event enabling

In the **Logs > Event enabling – arc**, this matrix is used to generate events when the current elements, light signals from the arc sensors, and the arc stages are activated or drop off.

Figure 95 - View of arc event enabling

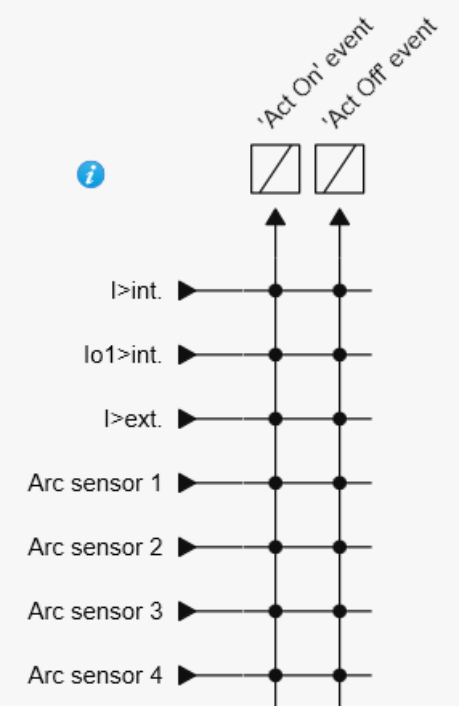

Table 21 - Arc event enabling matrix parameter group

Item	Default	Range	Description
I > int.	On	On; Off	Internal I overcurrent signal
$I_0$1 > int	On	On; Off	Internal $I_0$1 overcurrent signal
I > ext.	On	On; Off	External I overcurrent signal
Arc sensor 1... X	On	On; Off	Internal arc flash sensor 1...X; X is depending on the V321 order code.
Arc stage 1...8	On	On; Off	Arc protection stage 1...8.
Zone 1...4	On	On; Off	Zone information for Arc I/O bus (VAM I/O unit)
Arc I/O unit sensors	On	On; Off	VAM I/O unit sensors
BI1...BIX	On	On; Off	Binary input; X is depending on the V321 order code.

Table 21 - Arc event enabling matrix parameter group (Continued)

Item	Default	Range	Description
ArcAEM unit sensors	On	On; Off	PowerLogic A3 unit sensors
ArcEM G1...G16	On	On; Off	Group information for Arc EM bus (PowerLogic A3 units)

7 Technical data

Technical characteristics

Table 22 - PowerLogic A3 technical characteristics

Characteristic	Value			
	A3F6P	A3F12P	A3S6P	A3S12P
Auxiliary power supply				
U_{AUX}	24 – 240 (-20% – +10%) V ac/dc[8]		N/A	
Maximum withstand voltage	264 V ac/dc		N/A	
Normal operating power consumption	6 W; (Max. 9 W)		3 W; (Max. 4 W)	
Passive Power over Ethernet (ix Industrial® ports)	24 V dc(through the connection bus)			
High speed output, T1 and T3				
Number of contacts	1, NO			
Rated voltage (max withstand current)	250 V ac (3 A); 24 V dc (2 A); 250 V dc (0.2 A);			
Minimum voltage	12 V ac/dc			
Continuous current	5 A			
Minimum making current	-			
Maximum operation time (light only mode)	2 ms			
Make and carry, 0.5 s Make and carry, 3 s	30 A 15 A			
Breaking capacity, AC	2 000 VA (resistive load 1, inductive load 0.7)			
Breaking capacity, DC (L/R = 40 ms)	• at 48 V dc: 5 A • at 110 V dc: 3 A • at 220 V dc: 1 A			
Contact material	Ag alloy			
Terminal block: Pitch: 5.08 mm/0.2 in.	Wire dimension: Maximum 2.5 mm^2 (13 – 14 AWG) Minimum 1.5 mm^2 (15 – 16 AWG)			
Trip contact, T2				
Number of contacts	1, NO			
Rated voltage	250 V ac/dc			
Continuous current	5 A			
Minimum making current	100 mA at 24 V dc			
Maximum operation time (light only mode)	9 ms[9]			
Make and carry, 0.5 s Make and carry, 3 s	30 A 15 A			
Breaking capacity, AC	2 000 VA (resistive load 1, inductive load 0.7)			
Breaking capacity, DC (L/R = 40ms)	• at 48 V dc: 1.15 A • at 110 V dc: 0.5 A • at 220 V dc: 0.25 A			
Contact material	Ag alloy			
Terminal block:	Wire dimension:			

(8) 48 – 240 V ac / 24 – 240 V dc for marine application related to IACS E10.
(9) When the device operates in system (associated to other devices), the performance with HSO output is less than 2 ms and conventional output relay is less than 10 ms.

Table 22 - PowerLogic A3 technical characteristics (Continued)

Characteristic	Value			
	A3F6P	A3F12P	A3S6P	A3S12P
Pitch: 5.08 mm/0.2 in.	Maximum 2.5 mm^2 (13 – 14 AWG) Minimum 1.5 mm^2 (15 – 16 AWG)			
Watchdog, T4				
Number of contacts:	2, NC/NO			
Rated voltage	250 V ac/dc			
Continuous current	5 A			
Minimum making current	100 mA at 24 V ac/dc			
Make and carry, 0.5 s Make and carry, 3 s	30 A 15 A			
Breaking capacity, AC	2 000 VA (resistive load 1, inductive load 0.7)			
Breaking capacity, DC (L/R = 40ms)	• at 48 V dc: 1.15 A • at 110 V dc: 0.5 A • at 220 V dc: 0.25 A			
Contact material	Ag alloy			
Terminal block: Pitch: 5.08 mm/0.2 in.	Wire dimension: Maximum 2.5 mm^2 (13 – 14 AWG) Minimum 1.5 mm^2 (15 – 16 AWG)			
Arc sensor inputs				
Number of inputs	6	12	6	12
Supply to sensors	8 V dc			
Terminal block: Pitch: 3.5 mm/0.14 in.	Wire dimension: Maximum 1.5 mm^2 (15 – 16 AWG) Minimum 0.14 mm^2 (25 – 26 AWG)			
Connection cable	Twisted pair, with shield. Shield shall be grounded to the appropriate connector.			
IEC 60947-9-2 Compliance				
Light immunity	2000 lx (0,+400)			
Arc detection	Reduced energy arc, 10 kA, 400 V, with a cos Phi of 0,50 High energy arcs, 100 kA, 400 V, with a cos Phi of 0,20 Sensors placed 2000 mm from the arc			
Functional tests	Configure all output relays triggered for any sensor stimulation. Stimulated all the sensors one by one. The associated LED for sensor and output relay light on when the relay is triggered by the light sensors.			

Environmental characteristics

⚠WARNING

UNEXPECTED OPERATION

Install the PowerLogic A3 according to the environmental characteristics described in the table below.

Failure to follow these instructions can result in death, serious injury, or equipment damage.

Table 23 - Electro-Magnetic Compatibility (EMC) requirements

Characteristic	Standard	Description
Emission tests		
Radiated emission	EN IEC 60255-26 CISPR 11	Class A(10)
Conducted emission	EN IEC 60255-26 CISPR 11 CISPR 32	Class A (Power ports, Wired network port)
Radiated disturbances immunity tests		
Electrostatic discharges	IEC 61000-4-2	Level 4: +/- 8 kV Contact Discharge +/- 15 kV Air Discharge Criteria B
Radiated radio frequency electromagnetic field	IEC 61000-4-3	Level 3: 10 V/m, 0.8 to 6 GHz, AM 80% - 1 kHz Criteria A
Power frequency magnetic fields	IEC 61000-4-8	Level 5: 100 A/m, continuously - 60 s, 50/60 Hz Criteria A 1000 A/m, continuously - 3 s, 50/60 Hz Criteria B
Conducted disturbances immunity tests		
Electrical fast transient	IEC 61000-4-4	Level 4: 4 kV, burst frequency 5 kHz and 100 kHz Criteria B
Surge	IEC 61000-4-5	Level 3: 2 kV, 1.2/50 µs (CM) - 1 kV, 1.2/50 µs (DM) Criteria B(11)
RF conducted disturbances	IEC 61000-4-6	Level 3: 10 Vrms, 0.15 - 80 MHz - AM 80% - 1kHz Criteria A
Conducted low frequency	IEC 61000-4-16	Level 4: Continuous disturbance: 30 V - 50/60 Hz Short disturbance: 300 V (CM) - 50/60 Hz

(10) Tested from 30 MHz to 1 GHz. According to the EN IEC 60255-26, if the highest frequency of the internal sources of the EUT is less than 108 MHz, the measurement shall only be made up to 1 GHz.
(11) Zone B requirement level

Table 23 - Electro-Magnetic Compatibility (EMC) requirements (Continued)

Characteristic	Standard	Description
		Criteria A
Ripple (DC)	IEC 61000-4-17	Level 4: 15% UDC - 100 Hz / 120 Hz – 5 min Criteria A
Damped oscillatory waves	IEC 61000-4-18	Level 3: 2.5 kV (1 MHz and 100 kHz): CM 1 kV (1 MHz and 100 kHz): DM 2 kV (93/10/30 MHZ): CM Criteria B
Gradual shutdown	IEC 60255-26	Criteria C: Shut-down ramp 60 s Power off 5 min Start-up ramp 60 s

Table 24 - Electrical safety tests

Characteristic	Standard	Description
Insulation	IEC 60255-27	Insulation resistance > 100 MΩ at 500 Vdc
	IEC 60947-9-2	Insulation resistance > 100 MΩ at 500 Vdc
Clearances and creepage distances	IEC 60255-27	Pollution degree 2, Overvoltage category III
Dielectric voltage	IEC 60255-27	3.7 kV DC, 1 min: between all independent circuits. 1.5 kV AC, 1 min: across normally open control and signaling contacts. (12)
	IEC 60947-9-2	2.12 kV DC, 1 min: between all independent circuits.
Impulse voltage	IEC 60255-27	5 kV, 1.2 µs - 50 µs, 0.5 J between all independent circuits.
	IEC 60947-9-2	4.8 kV, 1.2 µs – 50 µs, 0.5 J between all independent circuits and case ground.
Protective bonding	IEC 60255-27	R< 0,1 Ω; 20 A, 12 V ac or dc maximum; 60 seconds.
Reverse polarity and slow ramp test	IEC 60255-27	/

Table 25 - Mechanical requirements (DIN rail mounting & panel mounting)

Characteristic	Standard	Description
Vibration	IEC 60255-21-1 IEC 60068-2-6	Class 1: Response – 0.5 Gn, 10 Hz to 150 Hz Endurance - 1 Gn, 10 Hz to 150 Hz
Shock and bump	IEC 60255-21-2	Class 1: Shock response - 5 Gn, 11 ms Shock withstand - 15 Gn, 11 ms Bump - 10 Gn, 16 ms
Seismic	IEC 60255-21-3	Class 1: 1 Gn horizontal; 0.5 Gn vertical

(12) None for high speed, high break control relay output due to solid state devices across normally open contact.

Table 26 - Climatic environmental requirements

Characteristic	Standard	Description
Cold test Dry heat test	IEC 60068-2-1 IEC 60068-2-2	In operation: -40°C (-40°F), 96 hours / +70°C (+158°F), 96 hours. Storage: -40°C (-40°F), 96 hours / +85°C (+185°F), 96 hours.
Damp heat steady state	IEC 60068-2-78	In operation: 10 days, 93% RH, +40°C (104°F).
Cyclic temperature with humidity	IEC 60068-2-30	In operation: 93% RH, +25°C to +55°C (77°F to 131°F), 6 cycles (12 hours + 12 hours).
Change of temperature test	IEC 60068-2-14	In operation: -40°C to +70°C (-40°F to +158°F) Exposure time: 2 h + 1 h, 5 cycles 1°C/min (1.8°F/min) of transfer time

Table 27 - Enclosure protection

Characteristic		Standard	Description
Enclosure protection	Front surface area	IEC 60529	IP2X
		IEC 62262	IK07
	Other area	IEC 60529	IP2X
Flammability of insulating materials, components, and fire enclosures		IEC 60255-27 IEC 60695-11-5	Needle flame test
Single fault condition		IEC 61010-1	Short-circuit of components
Durability of markings		IEC 60255-27	Water-resistance
Packaging		IEC 68000-2-31	Resistance to shocks by free fall (with packaging). 1 m (3.28ft)

Table 28 - Energizing quantities

Characteristic	Standard	Description
Burden	IEC 60255-1	A3F6P & A3F12P: Power supply DC: 5 W typical, 8 W maximum at 24 Vdc 7 W typical, 9 W maximum at 240 Vdc Power supply AC: 8 VA typical, 11 VA maximum at 24 Vac 20 VA typical, 24 VA maximum at 240 Vac A3S6P & A3S12P: Power supply DC: 3 W typical, 4 W maximum at 24 Vdc
AC power supply interruption	IEC 61000-4-11	24 Vac: 0% residual voltage @ 10 cycles (50/60 Hz) Criteria A 40% residual voltage @ 10/12 cycles (50/60 Hz) Criteria C 70% residual voltage @ 25/30 cycles (50/60 Hz) Criteria C 0% residual voltage @ 250/300 cycles (50/60 Hz) Criteria C 240 Vac: 0% residual voltage @ 25 cycles (50/60 Hz) Criteria A 40% residual voltage @ 10/12 cycles (50/60 Hz) Criteria C 70% residual voltage @ 25/30 cycles (50/60 Hz) Criteria C 0% residual voltage @ 250/300 cycles (50/60 Hz) Criteria C
DC power supply interruption	IEC 61000-4-29	24 Vdc: 0% residual voltage @ 200 ms Criteria A 40% residual voltage @ 200 ms Criteria C 70% residual voltage @ 500 ms Criteria C 0% residual voltage @ 5000 ms Criteria C 240 Vdc: 0% residual voltage @ 300 ms Criteria A 40% residual voltage @ 200 ms Criteria C 70% residual voltage @ 500 ms Criteria C 0% residual voltage @ 5000 ms Criteria C

Table 29 - Casing

Degree of protection (IEC 60529)	IP2X
Dimensions (W x H x D)	A3F: 70.6 x 134.4 x 126.2 mm / 2.78 x 5.29 x 4.97 in A3S: 34 x 134.4 x 125.1 mm / 1.34 x 5.29 x 4.92 in
Weight	A3F6P: 0.95 kg (2.094 lb) A3F12P: 0.91 kg (2.006 lb) A3S6P: 0.54 kg (1.190 lb) A3S12P: 0.51 kg (1.124 lb)

8 Commissioning and testing

Setting up the arc flash protection system

⚠⚠DANGER

HAZARD OF ELECTRIC SHOCK, EXPLOSION, OR ARC FLASH

- Apply appropriate personal protective equipment (PPE) and follow safe electrical work practices. See NFPA 70E, NOM-029-STPS-2011, or CSAZ462.
- The arc fault detection system is not a substitute for proper PPE when working on or near equipment being monitored by the system.
- Information on this product is offered as a tool for conducting arc-flash hazard analysis. It is intended for use only by qualified persons who are knowledgeable about power system studies, power distribution equipment, and equipment installation practices. It is not intended as a substitute for the engineering judgement and adequate review necessary for such activities.
- Only qualified personnel should install and service this equipment. Read this entire set of instructions and check the technical characteristics of the device before performing such work.
- Perform wiring according to national standards (NEC) and any requirements specified by the customer.
- Observe any separately marked notes and warnings.
- NEVER work alone.
- Before performing visual inspections, tests, or maintenance on this equipment, disconnect all sources of electric power. Assume all circuits are live until they are completely de-energized, tested, and tagged. Pay particular attention to the design of the power system. Consider all sources of power, including the possibility of back feeding.
- Always use a properly rated voltage sensing device to ensure that all power is off.
- The equipment must be properly grounded.
- Connect the device's protective ground to functional earth according to the connection diagrams presented in this document.
- Do not open the device. It contains no user-serviceable parts.
- Install all devices, doors and covers before turning on the power to this device.

Failure to follow these instructions will result in death or serious injury.

Before setting up the arc flash protection system:

- Mount and connect all components and sensors.
- Make sure that you understand the customer application.

Follow the procedures below to set up the arc flash protection system:

1. Identify the wiring connection of sensors to the device’s connectors.
2. Identify the wiring connection to breaking devices.
3. Proceed with configuration by rotary switches or eSetup Easergy Pro with consideration of the customer application.
4. Power up the device.
5. Reset the device by pushing the reset button.
6. Verify LED indication as described with consideration of the customer application.

Commissioning and testing

This section contains the commissioning and testing instructions. See the figure below for the testing sequence.

NOTE:

- This commissioning test sequence applies to the PowerLogic A3 device used in the system mode. If the PowerLogic A3 device is connected to the V321 as I/O unit, refer to the V321 User Manual for other test steps to complete the commissioning.
- Steps for testing the inter-tripping and testing the self-supervision of the PowerLogic A3 described in this chapter are not applicable to the commissioning of the PowerLogic A3 device used in the stand-alone mode.

Figure 96 - Testing sequence

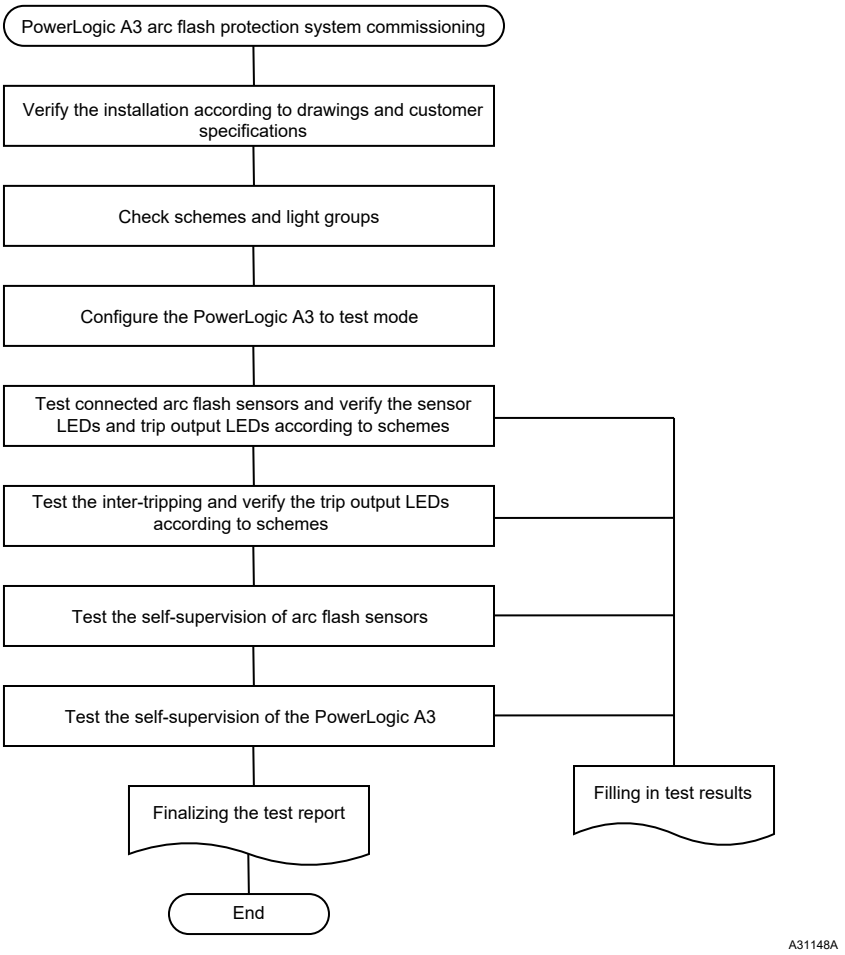

Checking the sensor installation

1. Check the protected compartment where sensors have been installed and compare them according to the drawings.
2. Consult the customer if the sensor installation does not match with the drawings.

Checking schemes and light groups

1. Check each PowerLogic A3's schemes and light group configuration and compare them with design documents.
2. In case of any discrepancy, inform the customer accordingly.

Configuring the PowerLogic A3 to test mode

For details of how to configure the PowerLogic A3 to test mode, see Test mode, page 48.

Sensor testing

⚠⚠DANGER

HAZARD OF ELECTRIC SHOCK, EXPLOSION, OR ARC FLASH

- Apply appropriate personal protective equipment (PPE) and follow safe electrical work practices. See NFPA 70E, NOM-029-STPS-2011, or CSAZ462.
- The arc fault detection system is not a substitute for proper PPE when working on or near equipment being monitored by the system.
- Information on this product is offered as a tool for conducting arc-flash hazard analysis. It is intended for use only by qualified persons who are knowledgeable about power system studies, power distribution equipment, and equipment installation practices. It is not intended as a substitute for the engineering judgement and adequate review necessary for such activities.
- Only qualified personnel should install and service this equipment. Read this entire set of instructions and check the technical characteristics of the device before performing such work.
- Perform wiring according to national standards (NEC) and any requirements specified by the customer.
- Observe any separately marked notes and warnings.
- NEVER work alone.
- Before performing visual inspections, tests, or maintenance on this equipment, disconnect all sources of electric power. Assume all circuits are live until they are completely de-energized, tested, and tagged. Pay particular attention to the design of the power system. Consider all sources of power, including the possibility of back feeding.
- Always use a properly rated voltage sensing device to ensure that all power is off.
- The equipment must be properly grounded.
- Connect the device's protective ground to functional earth according to the connection diagrams presented in this document.
- Do not open the device. It contains no user-serviceable parts.
- Install all devices, doors and covers before turning on the power to this device.

Failure to follow these instructions will result in death or serious injury.

In the test mode, when you test the arc flash sensors with the light-only criteria, the sensor LED light becomes steady yellow and trip LED light becomes steady red according to configured schemes.

In the test mode, when you test the arc flash sensors with the light and current criteria, with an injected current, the sensor LED light becomes steady yellow and trip LED light becomes steady red according to configured schemes, while without an injected current, only the sensor LED light becomes steady yellow according to configured schemes.

The indication of the arc fault is registered by the PowerLogic A3.

NOTE: Testing the arc flash sensors using a light source can trip the neighboring zones.

NOTE: For more information on viewing and resetting indications, see the corresponding sensor user manual or se.com.

Testing the connected sensors and verifying the LEDs

Test the sensors connected to the PowerLogic A3 device. Reset the PowerLogic A3 device before the test.

Figure 97 - Testing connected point sensors

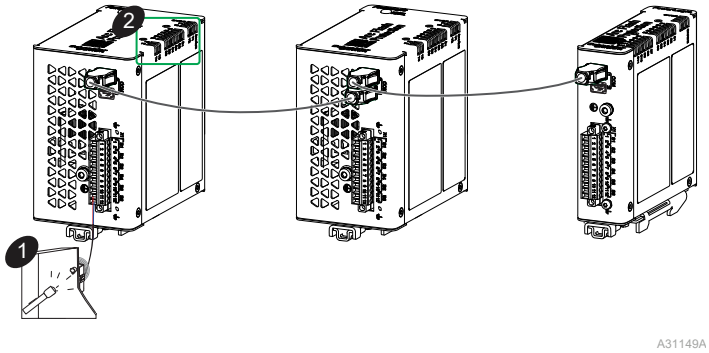

1. Point light to each arc flash sensor, one at a time, with a powerful light source such as camera flash unit or flashlight.
2. Check if the light of sensor LEDs on the PowerLogic A3 device become steady yellow, and if the light of trip LEDs on the PowerLogic A3 device become steady red according to configured schemes.
3. Fill in the test result in the test report.
4. Reset the device.
5. Repeat the procedure with the next sensor.

Testing the inter-tripping and verifying the LEDs

Test the inter-tripping by activating sensors connected to the neighbor PowerLogic A3 device whose light group setting is same with the local PowerLogic A3 in “Testing the connected sensors and verifying the LEDs” procedure. Reset the PowerLogic A3 device before the test.

Figure 98 - Testing the inter-tripping

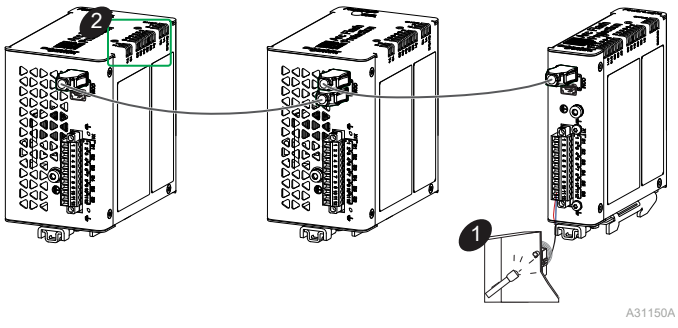

1. Choose an appropriate neighbor/remote PowerLogic A3 device connected with sensor which can activate the same light group as the local PowerLogic A3 device. Point light to the neighbor/remote arc flash sensor, with a powerful light source such as camera flash unit or flashlight.
2. Check if the light of trip output LEDs on the local PowerLogic A3 device become steady red according to configured schemes.
3. Fill in the test result in the test report.
4. Reset the device.
5. Repeat the procedure with other PowerLogic A3 device or sensors if required.

Testing the sensor’s self-supervision

Test the self-supervision feature of sensors connected to the PowerLogic A3 device.

Figure 99 - Testing the sensor’s self-supervision

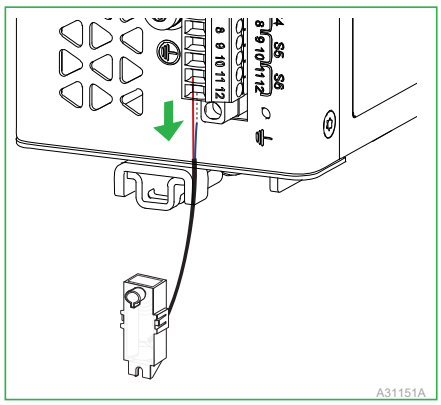

1. Disconnect wiring of one point sensor, one sensor for each PowerLogic A3 device, to see that the self-supervision system recognizes the fault in the sensor.
2. Wait until the LED indication appears as below.
   - Sensor LED: Yellow, blinking.
   - ON/C/E LED: Red.
   - Trip LED: OFF.
   - T4 LED (on any A3F6P/A3S6P device): Red, steady.
3. Fill in the test results in the test report.
4. Reconnect the wire and reset the system.
5. Repeat the procedure with other PowerLogic A3 units.

Testing the supervision of PowerLogic A3 devices

Figure 100 - Testing of the PowerLogic A3 self-supervision

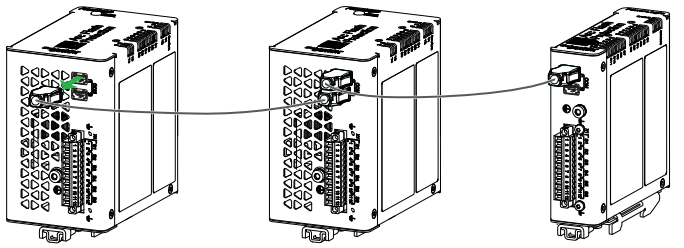

A31152A

1. Disconnect the Ethernet connection from the PowerLogic A3 device in the communication chain in order to remove it from the PowerLogic A3 arc flash protection system.
2. Wait until the LED indication of all PowerLogic A3 devices appears as below.
   - ON/C/E LED: Red.
   - T4 LED (on A3F6P/A3S6P device): Red, steady.
3. Fill in the test results in the test report.
4. Reconnect the Ethernet connection and reset the system.
5. Repeat the procedure with other Ethernet cables and test all PowerLogic A3 devices.

Filling in the test report

Fill in all the required information about the PowerLogic A3 arc flash protection system, the tested PowerLogic A3 units and the test results. The test report below is just a general example, you can use it as a starting point to create your own test report.

PowerLogic A3 commissioning and testing report						
Customer information	Customer name:			Substation:		
	Customer address:			Bay:		
Unit	PowerLogic A3 device model:			PowerLogic A3 device name/location:		
	Serial number:			Order code:		
	PowerLogic A3 device scheme setting:			PowerLogic A3 device light group setting:		
	PowerLogic A3 device is set to test mode: Yes ☐; No ☐					
Connected arc flash sensor test	Sensor No. tested	Sensor LED	Trip output LEDs			Remark
			T1	T2	T3	
	1 ☐	OK ☐; NA ☐	OK ☐; NA ☐	OK ☐; NA ☐	OK ☐; NA ☐	
	2 ☐	OK ☐; NA ☐	OK ☐; NA ☐	OK ☐; NA ☐	OK ☐; NA ☐	
	3 ☐	OK ☐; NA ☐	OK ☐; NA ☐	OK ☐; NA ☐	OK ☐; NA ☐	
	4 ☐	OK ☐; NA ☐	OK ☐; NA ☐	OK ☐; NA ☐	OK ☐; NA ☐	
	5 ☐	OK ☐; NA ☐	OK ☐; NA ☐	OK ☐; NA ☐	OK ☐; NA ☐	
	6 ☐	OK ☐; NA ☐	OK ☐; NA ☐	OK ☐; NA ☐	OK ☐; NA ☐	
	7 ☐	OK ☐; NA ☐	OK ☐; NA ☐	OK ☐; NA ☐	OK ☐; NA ☐	
	8 ☐	OK ☐; NA ☐	OK ☐; NA ☐	OK ☐; NA ☐	OK ☐; NA ☐	
	9 ☐	OK ☐; NA ☐	OK ☐; NA ☐	OK ☐; NA ☐	OK ☐; NA ☐	
	10 ☐	OK ☐; NA ☐	OK ☐; NA ☐	OK ☐; NA ☐	OK ☐; NA ☐	
	11 ☐	OK ☐; NA ☐	OK ☐; NA ☐	OK ☐; NA ☐	OK ☐; NA ☐	
	12 ☐	OK ☐; NA ☐	OK ☐; NA ☐	OK ☐; NA ☐	OK ☐; NA ☐	
Inter-tripping test by activating remote arc flash sensor	Trip relay	Trip output LED according to scheme & light group settings		Activated remote sensor No. and remote PowerLogic A3 device name		Remark
	1	OK ☐; NA ☐				
	2	OK ☐; NA ☐				
	3	OK ☐; NA ☐				
Sensor self-supervision test	Sensor No. tested	Sensor LED	ON/C/E LED	Trip output LEDs	T4 LED (A3F6P/A3S6P)	Remark
		OK ☐;	OK ☐;	OK ☐;	OK ☐; NA ☐	
		OK ☐;	OK ☐;	OK ☐;	OK ☐; NA ☐	
		OK ☐;	OK ☐;	OK ☐;	OK ☐; NA ☐	
		OK ☐;	OK ☐;	OK ☐;	OK ☐; NA ☐	
PowerLogic A3 device self-supervision test	ON/C/E LED		T4 LED (A3F6P/A3S6P)			
	OK ☐;		OK ☐; NA ☐			
Signature	Commissioner:					
	Supervisor:					
	Date:					

9 Maintenance

⚠DANGER

HAZARD OF UNEXPECTED SYSTEM OPERATION

- If the arc flash detection unit is no longer supplied with power or is in permanent non-operational state, the protection functions are no longer active and all the output contacts are dropped out.
- To detect a power-off or a permanent error state, connect the watchdog output contact to a monitoring device such as SCADA or DCS.

Failure to follow these instructions will result in death or serious injury.

The PowerLogic A3 requires maintenance to help ensure that it works according to the specification. Keep record of the maintenance actions performed for the system. The maintenance can include, but is not limited to, the following actions.

Preventative maintenance

The PowerLogic A3 device, sensor and cabling shall be visually checked when the switchgear is de-energized. During such inspection pay attention to

- possible dirty arc sensors
- loose wire connections
- damaged wiring
- indicator lights
- other mechanical connections

Visual inspection shall be made minimum every three (3) years.

Periodical testing

The PowerLogic A3 device, cabling and sensors must periodically be tested according to the end-user's safety instructions, national safety instructions or law. Manufacturer recommend functional testing being carried minimum every five (5) years.

It is proposed that the periodic testing is conducted with a secondary injection principle for those protection stages which are used in the IED and its related units.

Hardware cleaning

Pay special attention to help to ensure that the device, its extension units and sensors are always clean.

⚠DANGER

HAZARD OF UNEXPECTED SYSTEM OPERATION

- Do not use any type of solvents or gasoline to clean the device, sensors or cables.
- When cleaning the sensor, make sure that the cleaning solution does not contact anything other than the sensor.

Failure to follow these instructions will result in death or serious injury.

- If cleaning is required, wipe out dirt from the device.
- Use a dry cleaning cloth or equivalent together with mild soapy water to clean any residues from the light sensor.

Sensor condition and positioning check

Always check that the sensor positioning remains as it was originally designed after:

- Commissioning
- Sensor replacement
- Modification procedure
- Cleaning
- Arc flash fault
- Periodic testing

Check for obstruction of the sensors.

System status messages

In case the PowerLogic A3's self checking detects unexpected system status, it will in most cases provide alarm concerning this by activating the ON/C/E LED and indication status notification on the WD output. Once this happen, contact your local representative for further guidance.

PowerLogic A3 system events are available in V321 unit event buffer.

Troubleshooting

Issues	LED indication	Possible Causes	Actions
The trip signal does not reach the circuit breaker.	Trip LED: Red, steady. ON/C/E LED: Green, steady.	Wiring error of the trip circuit.	Check the wiring.
The protection does not trip even when a sufficient light signal is provided.	Sensor LED: Yellow, steady. Trip LED: OFF. ON/C/E LED: Green, steady.	Require specific condition to trip.	Check the configuration.
	Sensor LED: OFF. Trip LED: OFF. ON/C/E LED: Green.	Loosened sensor wire before installation. Sensor not detected.	Check the sensor and sensor wiring.
	Sensor LED: Yellow, blinking. Trip LED: OFF. ON/C/E LED: Red. T4 LED: Red, steady.	Sensor defect.	Replace the sensor.
		Short-circuited wiring of sensor	Check the sensor wiring.
		Loosened sensor wire after installation.	Check the sensor wiring.
		The light is supplied to the arc flash sensor for over 3 s, the daylight blocking mode activates.	Remove the light and reset the sensor.
Communication error. Devices not working due to low voltage.	ON/C/E LED: Red. T4 LED: Red, steady.	The total distance between the ends of the communication bus exceeds 100 meters.	Check the distance.

Issues	LED indication	Possible Causes	Actions
		A PowerLogic A3F device supplies power to more than one PowerLogic A3S devices.	Check the number of connected devices or install an auxiliary power.

Returning for expert assessment

To return PowerLogic A3 for expert assessment, use the original packaging if possible.

PowerLogic A3 must be returned accompanied by its settings sheet and the following information:

- Name and address of the initiator
- PowerLogic A3 type and serial number
- Date of the incident
- Detailed description of the incident
- LED status at the time of the incident
- List of stored events
- Repair and Modification Authorization (RMA) form which is from the country organization

End of life

At end of life of PowerLogic A3, Schneider Electric's Green Premium program helps decrease the amount of waste and allow recovery of the product components and materials. Please refer to the Product Environmental Profile and the End of Life instructions documents available on SE website: www.se.com/ww/en/about-us/sustainability/green-premium-products/.

Dispose the device according to the legislation of the country when decommissioning the device. It helps prevent potential disclosure of data contained in the device that was not removed.

⚠WARNING

UNAUTHORIZED OR UNINTENDED ACCESS TO CONFIDENTIAL DATA

Ensure all data from the device has been saved and erased.

Failure to follow these instructions can result in unauthorized or unintended access to sensitive or secure customer data.

10 Order information

When ordering, please state:

- Type designation
- Quantity
- Accessories (see respective ordering code)

Table 30 - Accessories

Commercial Reference	Product Name	Description
REL52804	VA 1 DA-6	Arc sensor, cable length 6 m (19.69 ft)
REL52801	VA 1 DA-20	Arc sensor, cable length 20 m (65.62 ft)
REL52806	VA 1 DA-6S	Arc sensor, shielded, cable length 6 m (19.69 ft)
REL52803	VA 1 DA-20S	Arc sensor, shielded, cable length 20 m (65.62 ft)
REL52805	VA 1 DA-6S-HF	Arc sensor, halogen free, cable length 6 m (19.69 ft)
REL52802	VA 1 DA-20S-HF	Arc sensor, halogen free, cable length 20 m (65.62 ft)
REL52839	VA 1 DA-6W	Arc sensor, shielded at sensor end, cable length 6 m (19.69 ft)
REL52840	VA 1 DA-20W	Arc sensor, shielded at sensor end, cable length 20 m (65.62 ft)
REL52809	VA 1 EH-6	Arc sensor (pipe type), cable length 6 m (19.69 ft)
REL52807	VA 1 EH-20	Arc sensor (pipe type), cable length 20 m (65.62 ft)
REL52810	VA 1 EH-6S	Arc sensor (pipe type), shielded, cable length 6 m (19.69 ft)
REL52808	VA 1 EH-20S	Arc sensor (pipe type), shielded, cable length 20 m (65.62 ft)
REL52828	VYX 001	Surface mounting plate for sensors, Z-shaped
REL52829	VYX 002	Surface mounting plate for sensors, L-shaped
REL52902	Door mount bracket	For PowerLogic A3S, IP 20
REL52903	Door mount bracket	For PowerLogic A3F and PowerLogic A125, IP 20
REL52960	A3 Config Arc EM	A3 Configuration Arc EM cable to RJ45
REL52961	A3 Arc EM cable 1 m (3.28 ft)	A3 Arc EM cable 1 m (3.28 ft) Comm and ix Industrial® ports
REL52962	A3 Arc EM cable 2 m (6.56 ft)	A3 Arc EM cable 2 m (6.56 ft) Comm and ix Industrial® ports
REL52963	A3 Arc EM cable 3 m (9.85 ft)	A3 Arc EM cable 3 m (9.85 ft) Comm and ix Industrial® ports
REL52964	A3 Arc EM cable 5 m (16.41 ft)	A3 Arc EM cable 5 m (16.41 ft) Comm and ix Industrial® ports
REL52965	A3 Arc EM cable 10 m (32.81 ft)	A3 Arc EM cable 10 m (32.81 ft) Comm and ix Industrial® ports
REL52966	A3 Arc EM cable 15 m (49.21 ft)	A3 Arc EM cable 15 m (49.21 ft) Comm and ix Industrial® ports

Table 30 - Accessories (Continued)

Commercial Reference	Product Name	Description
REL52967	A3 Arc EM cable 20 m (65.61 ft)	A3 Arc EM cable 20 m (65.61 ft) Comm and ix Industrial® ports
REL52968	A3 Arc EM cable 25 m (82.02 ft)	A3 Arc EM cable 25 m (82.02 ft) Comm and ix Industrial® ports
REL52969	A3 Arc EM cable 30 m (98.42 ft)	A3 Arc EM cable 30 m (98.42 ft) Comm and ix Industrial® ports

11 Revision history

Document version	Description	
A3/EN M/01A	First edition for initial product release.	
2023-06	Firmware version	V01.000
	Configuration tool	eSetup Easergy Pro V4.4.0 or later
A3/EN M/01B	Firmware version	V01.100 (13)
2024-06	Configuration tool	eSetup Easergy Pro V4.4.0 or later
		Supports operates as extension module of V321 to set up a sophisticated arc protection system
		Restore the status of sensors and outputs after A3 restarts
		Supports TestMode Reset feature in eSetup EasergyPro
		WD won't be reset until system restored from abnormal conditions
A3/EN M/01C	Firmware version	V01.101
2024-11	Configuration tool	eSetup Easergy Pro V4.4.0 or later
		T2 of A3F12P can be used as TRIP+SF relay if the device set to scheme #1 and scheme #2. (14)
A3/EN M/01D	Firmware version	V01.101
2025-09	Configuration tool	eSetup Easergy Pro V4.4.0 or later
		Update of IEC 60947-9-2 Compliance certification: Active arc-fault mitigation systems – Optical-based internal arc-detection and mitigation devices.

(13) The A3 V01.100 and newer versions support more functions and features to communicate with V321, therefore the A3 V01.100 is not compatible with earlier A3 V01.000 version.
(14) This feature TRIP+SF is dedicated to A3F12P and only accessible for scheme #1 and scheme #2.

Schneider Electric Industries SAS
35 rue Joseph Monier CS30323
92506 Rueil-Malmaison Cedex
France

+ 33 (0) 1 41 29 70 00

www.se.com

As standards, specifications, and design change from time to time, please ask for confirmation of the information given in this publication.

© 2023 – 2025 Schneider Electric. All rights reserved.

A3/EN M/01D