Low voltage electrical distribution

Masterpact NT

Circuit breakers and switch-disconnectors
NAVY from 600 to 1600 A

User manual
06/2009



Schneider Electric

User manual for circuit breakers and switch-disconnectors
Masterpact NT06-16 NAVY

Contents

Identifying Masterpact **2**
Rating plate 2

Discovering Masterpact **4**
Components 4

Using Masterpact **8**
Understanding the controls and indications 8
Charging the circuit breaker 9
Closing the circuit breaker 10
Opening the circuit breaker 11
Resetting after a fault trip 12
Locking the controls 13

Using the Masterpact drawout chassis **16**
Identifying the circuit breaker positions 16
Racking 17
Locking the circuit breaker in position 20
Locking the safety shutters 23

Identifying the electrical auxiliaries **24**
Identification of the connection terminals 24
Operation 25
Electrical diagrams 26

Inspecting and testing before use **28**
Initial tests 28
What to do when the circuit breaker trips ? 29
Recommended maintenance program 30

Maintenance guide **32**
Masterpact NT NAVY
What must be maintainedand why ? 32
Recommended preventivemaintenance and time intervals 37
Level II preventive maintenance recommended every year 38
Level III preventive maintenance recommended every 2 years 39
Level IV manufacturer diagnostic and replacement of components recommended every 5 years 40

Ordering Masterpact accessories and replacement parts **42**
Connections and arc chutes 42
Micrologic control units 43
Micrologic control unitsTest equipment 44
Indication contacts 45
Auxiliaries for remote operation 47
Device mechanical accessories 49
Chassis accessories, carriage switches and parts. 51

Maintaining Masterpact performance **54**
Troubleshooting and solutions 54

Checking Masterpact operating conditions **56**
Environmental conditions 56

Rating plate

DB119834

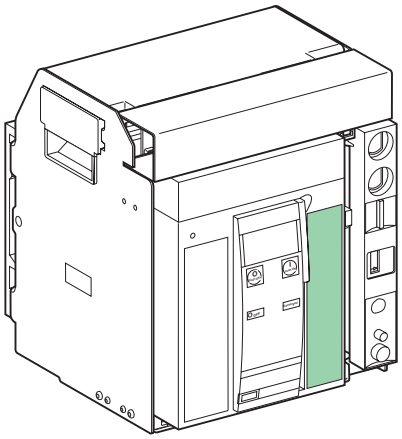

DB119836

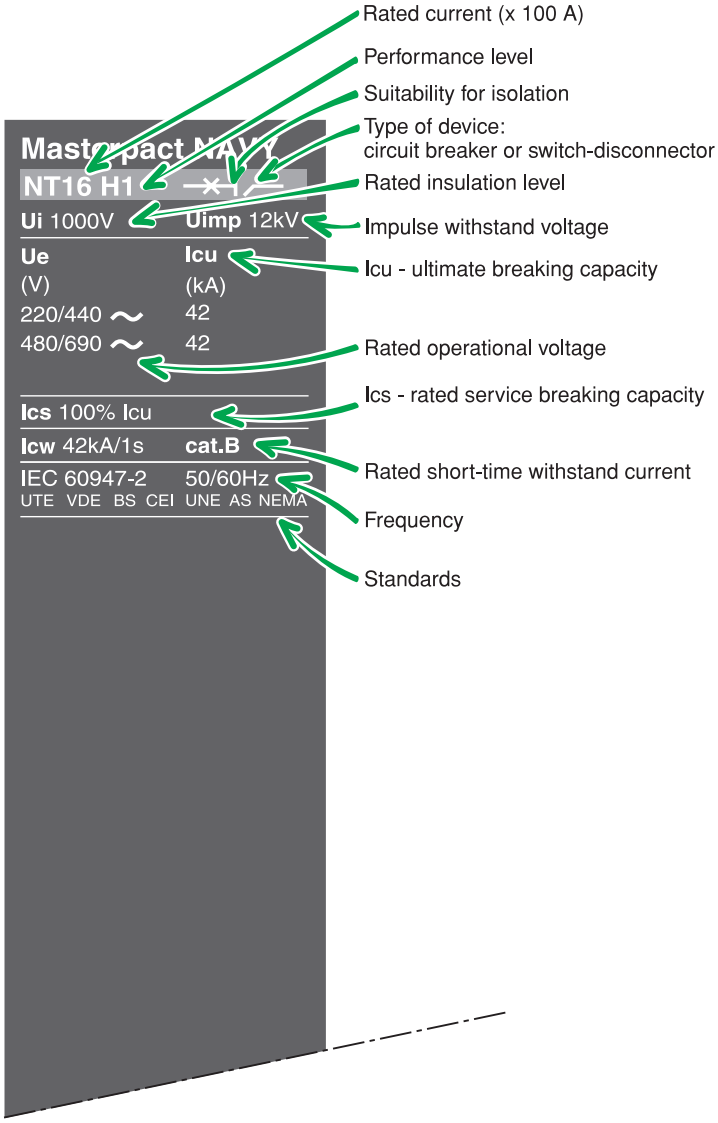

Components

Masterpact NAVY circuit breaker is available in drawout version.

Drawout version

DB103506

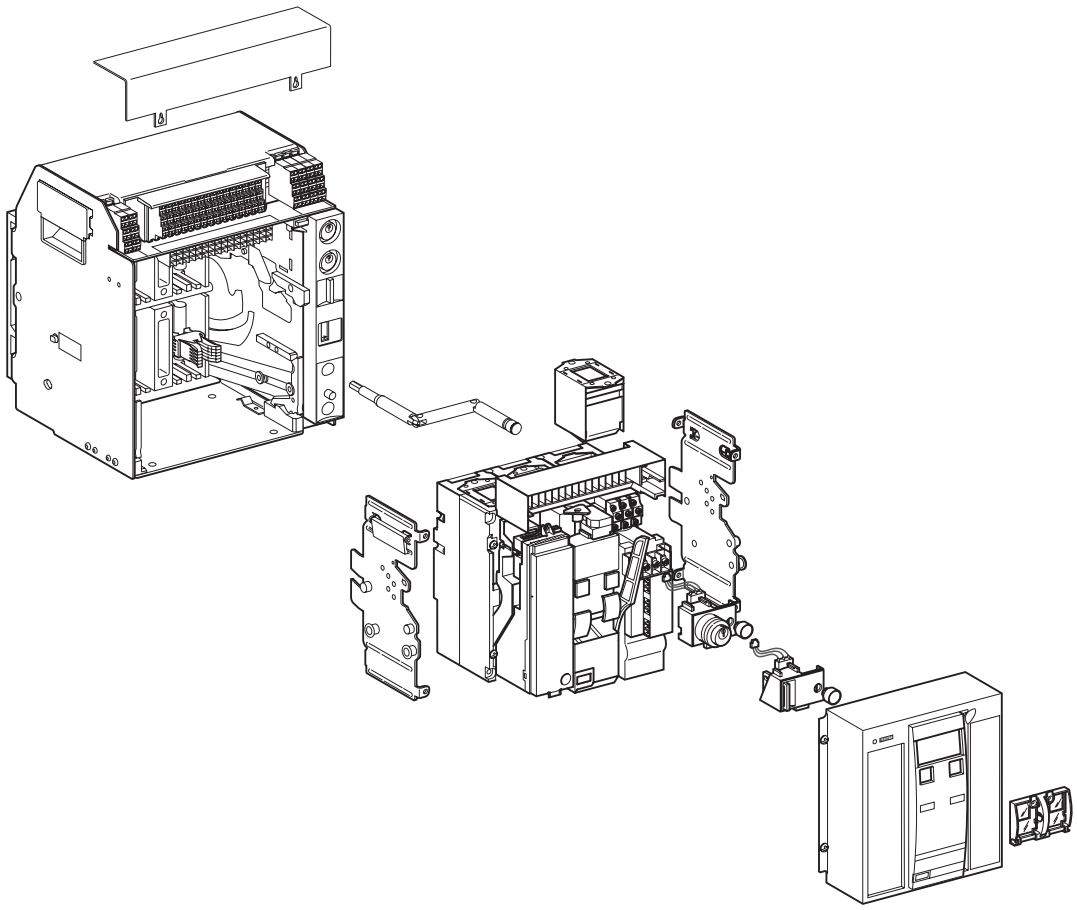

Components

Chassis NAVY

DB119838

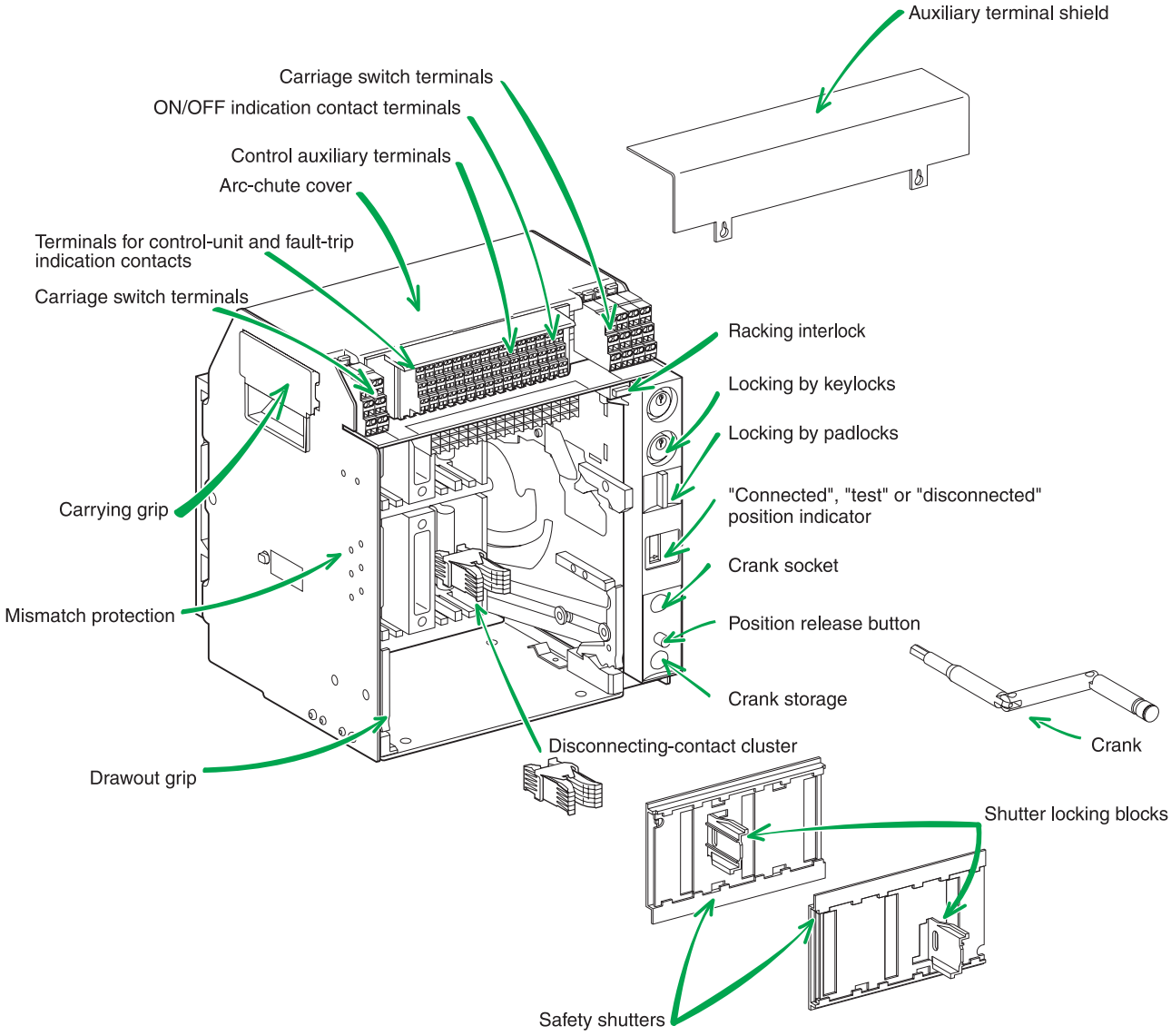

Components

Drawout circuit breaker NAVY

DB119841

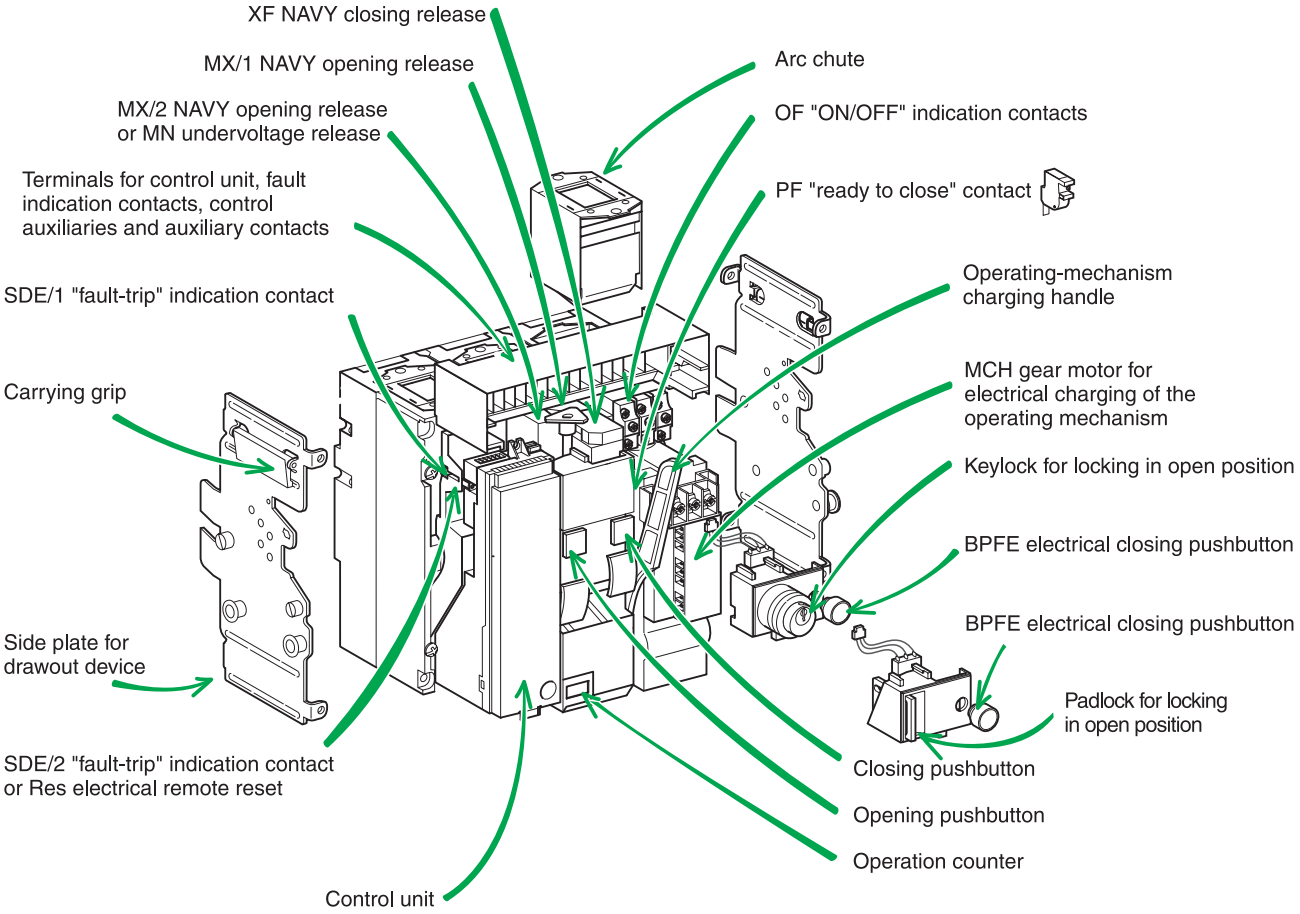

Front

DB119842

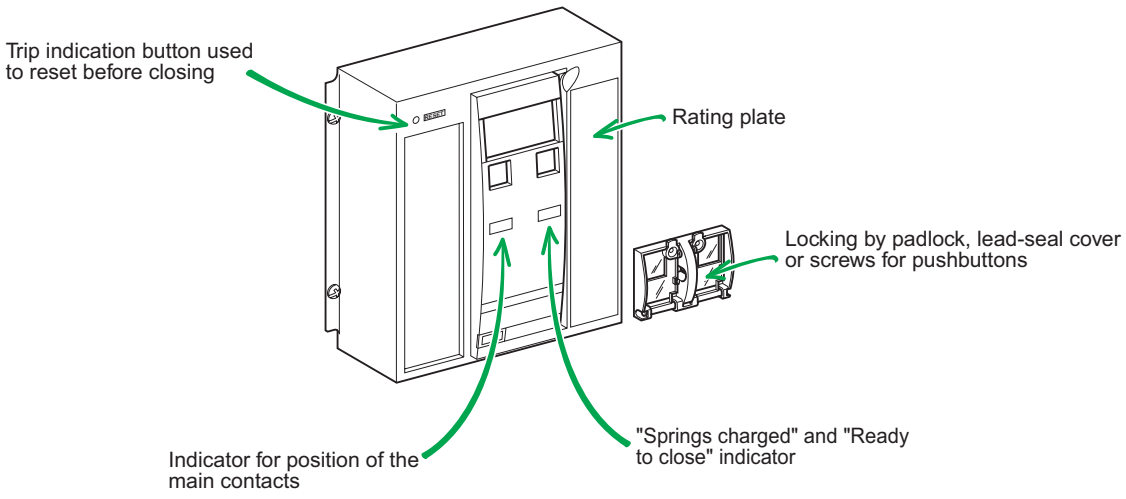

Understanding the controls and indications

DB119843

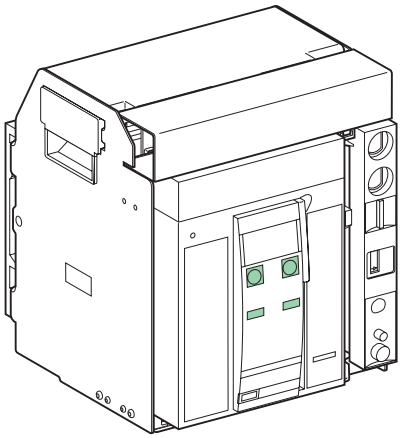

Circuit breaker open and discharged

E51488A

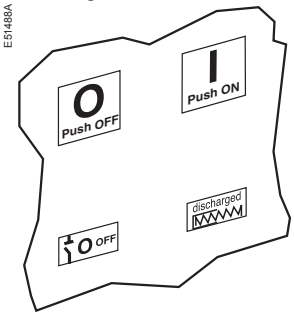

Circuit breaker closed and discharged

E51489A

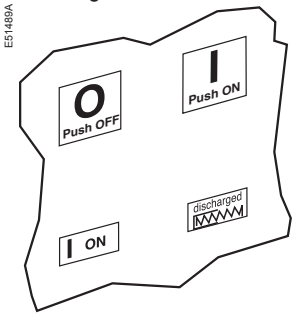

Circuit breaker open, charged and not "ready to close"

E51490A

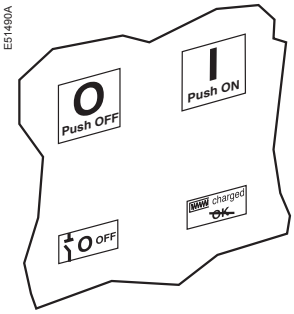

Circuit breaker closed and charged

E51491A

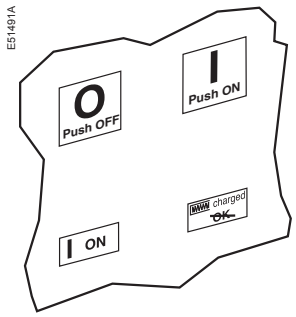

Circuit breaker open, charged and "ready to close"

E51492A

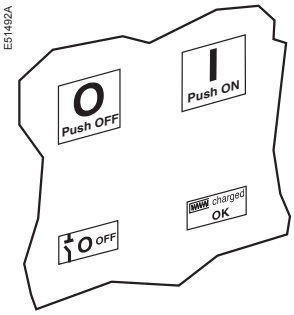

Charging the circuit breaker

The charge status is indicated as follows.

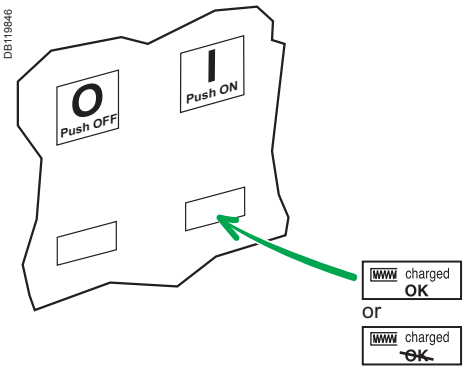

The springs in the circuit breaker operating mechanism must be charged to store the energy required to close the main contacts. The springs may be charged manually using the charging handle or automatically by the optional MCH gear motor.

Manual charging:
pull the handle down seven times until you hear a "clack".

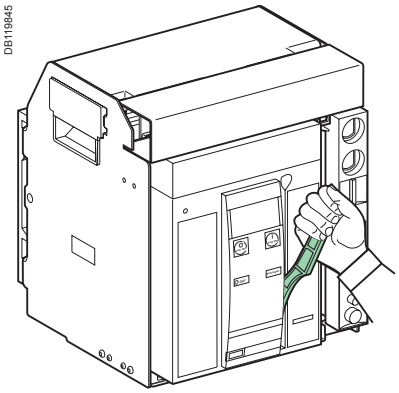

Automatic charging:
if the MCH gear motor is installed, the spring is automatically recharged after each closing.

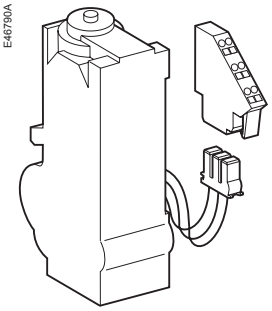

Closing the circuit breaker

Device "ready to close"

E51291A



Device not "ready to close"

E51292A



Closing conditions

Closing (i.e. turning the circuit ON) is possible only if the circuit breaker is "ready to close".
The prerequisites are the following:

- device open (OFF)
- springs charged
- no opening order present.

The circuit breaker will not close unless it is "ready to close" when the order is given.

Closing the circuit breaker

Locally (mechanical)
Press the mechanical ON pushbutton.

E60047A

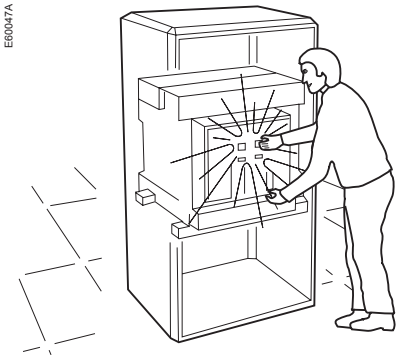

E51493A

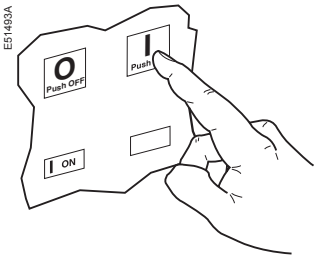

Locally (electrical)

BPFE

E60049A

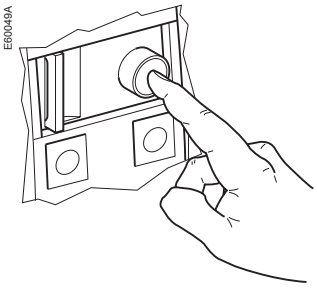

XF

E51294A

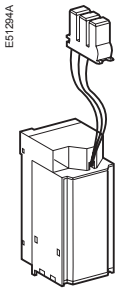

Press the electrical closing pushbutton. By adding an XF closing release, the circuit breaker can be closed locally.

Remotely

XF

DB119847

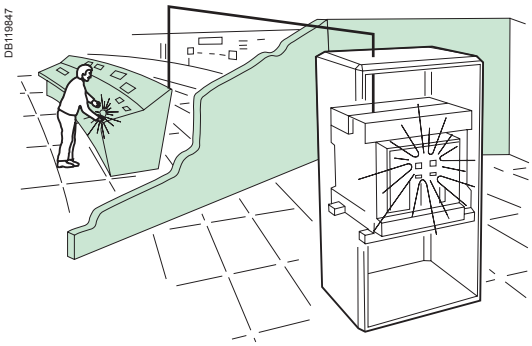

E51294A

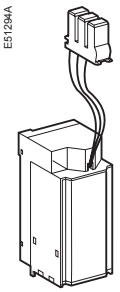

When connected to a remote control panel, the XF closing release can be used to close the circuit breaker remotely.

Anti-pumping function

The purpose of the mechanical anti-pumping function is to ensure that a circuit breaker receiving simultaneous opening and closing orders does not open and close indefinitely.
If there is a continuous closing order, after opening the circuit breaker remains open until the closing order is discontinued. A new closing order is required to close the circuit breaker. A new order is not required if the closing release is wired in series with the PF "ready to close" contact.

Opening the circuit breaker

E80047A

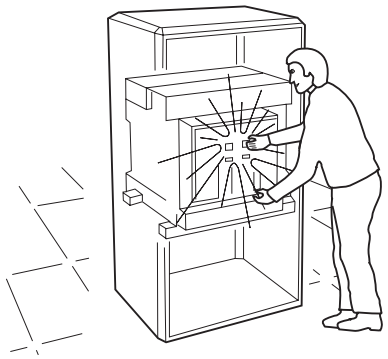

Locally
Press the OFF pushbutton.

E51499A

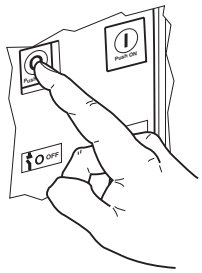

DB119847

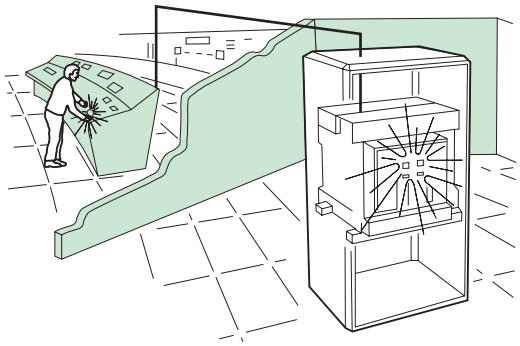

Remotely
Use one of the following solutions:
- one or two MX opening releases (MX1 and MX2)
- one MN undervoltage release
- one MN undervoltage release with a delay unit.

When connected to a remote control panel, these releases can be used to open the circuit breaker remotely.

MX1, MX2, MN

E51294A

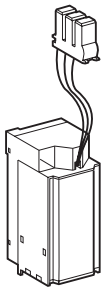

Delay unit

E51296A

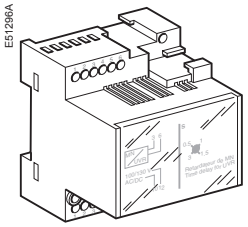

Resetting after a fault trip

The circuit breaker signals a fault trip by:
- a mechanical indicator on the front
- one or two SDE "fault-trip" indication contacts (SDE/2 is optional).

Locally
If the circuit breaker is not equipped with the automatic reset option, reset it manually.

E60047A

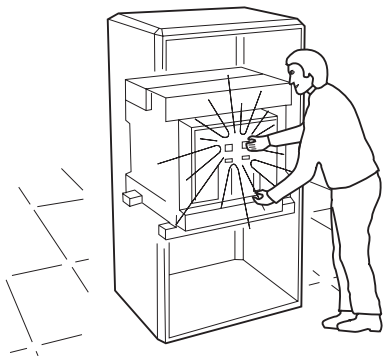

DB119848

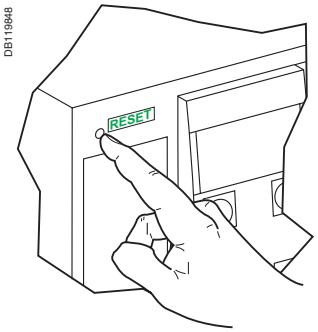

Locking the controls

Disabling circuit-breaker local closing and opening

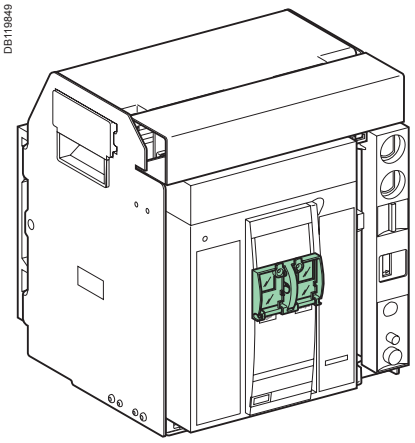

Pushbutton locking using a padlock (shackle diameter 5 to 8 mm), a lead seal or screws.

Padlock.

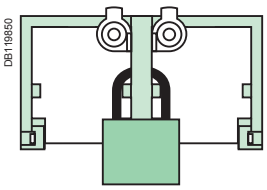

Lead seal.

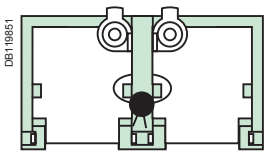

Screws.

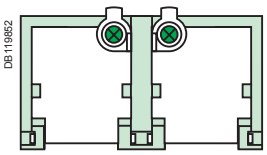

Locking

Close the covers.

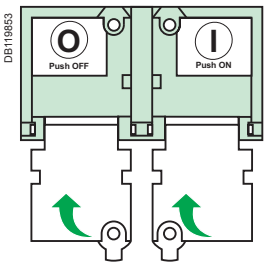

Insert the padlock shackle, lead seal or screws.

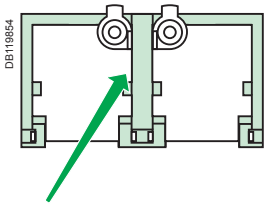

Unlocking

Remove the padlock, lead seal or screws.

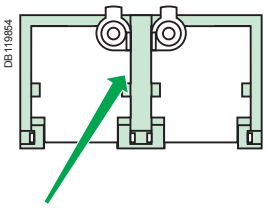

Lift the covers and swing them down.

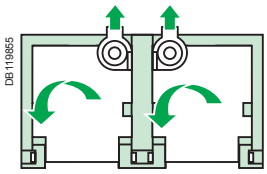

The pushbuttons are no longer locked.

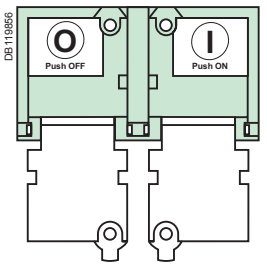

Locking the controls
Disabling local and remote closing

Combination of locking systems
To disable local and remote circuit-breaker closing, use as needed one to three padlocks or a keylock.

Install one to three padlocks (maximum shackle diameter 5 to 8 mm)
Locking

Open the circuit breaker.

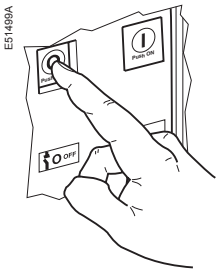

Pull out the tab.

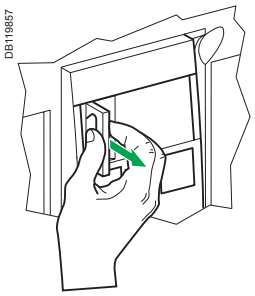

Insert the padlock shackle.

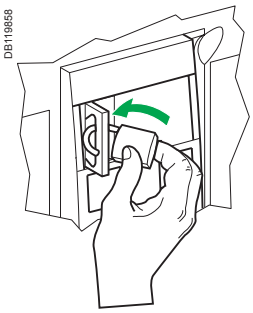

Check

The closing control is inoperative.

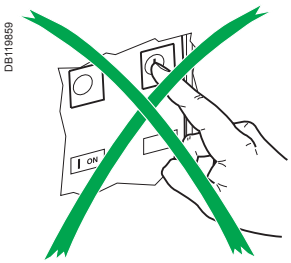

Unlocking

Remove the padlock.

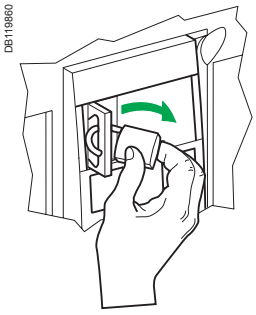

Locking the controls
Disabling local and remote closing

Locking the controls with a keylock

Locking

Open the circuit breaker.

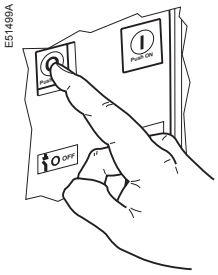

Turn the key.

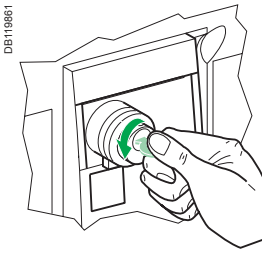

Remove the key.

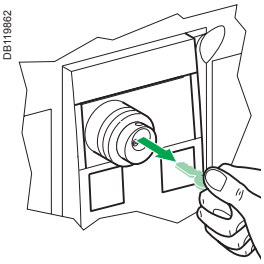

Check

The closing control is inoperative.

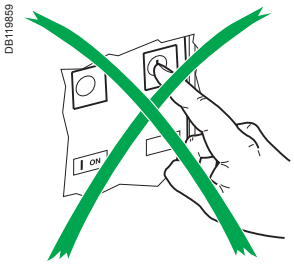

Unlocking

Insert the key.

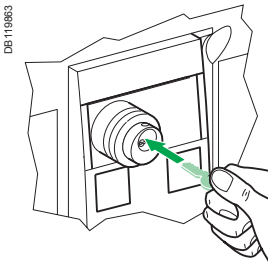

Turn the key.

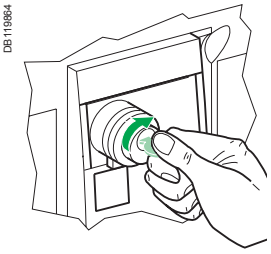

The key cannot be removed.

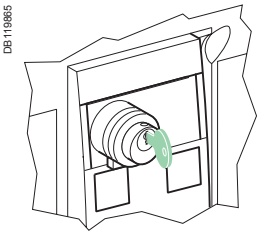

Three types of keylocks are available

RONIS

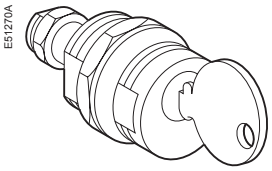

PROFALUX

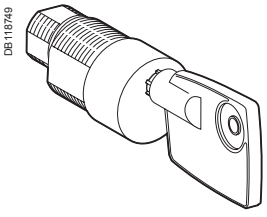

CASTELL

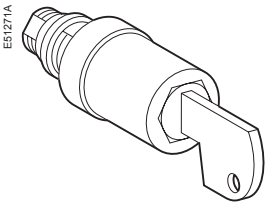

Identifying the circuit breaker positions

The indicator on the front signals the position of the circuit breaker in the chassis.

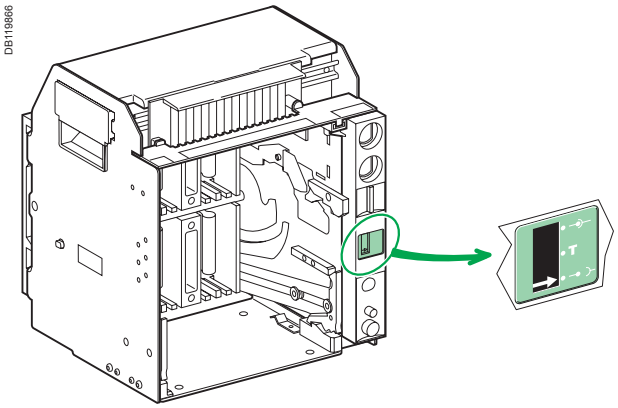

■ "connected" position

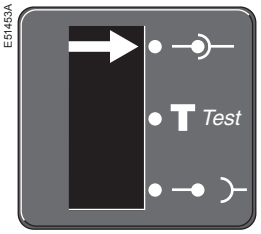

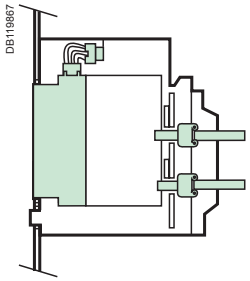

■ "test" position

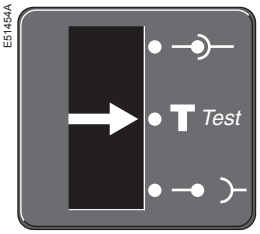

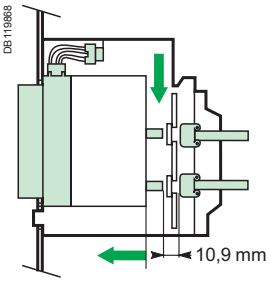

■ "disconnected" position

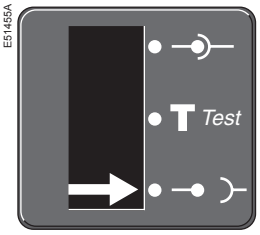

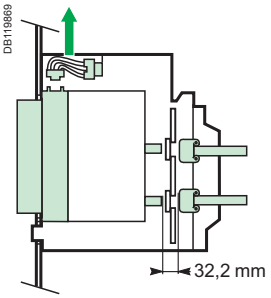

Racking

These operations require that all chassis-locking functions be disabled (see page 22).

Prerequisites

To connect and disconnect Masterpact, the crank must be used. The locking systems, padlocks and the racking interlock all inhibit use of the crank.

Withdrawing the circuit breaker from the "connected" to "test" position, then to "disconnected" position

The circuit breaker is in "connected" position.

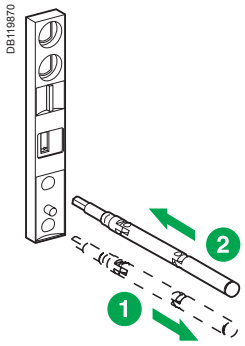

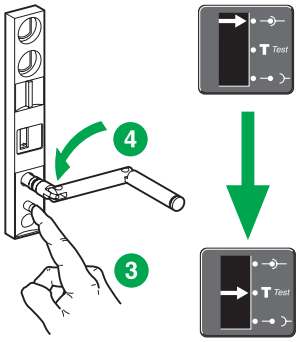

The circuit breaker is in "test" position. Remove the crank or continue to "disconnected" position.

The circuit breaker is in "test" position.

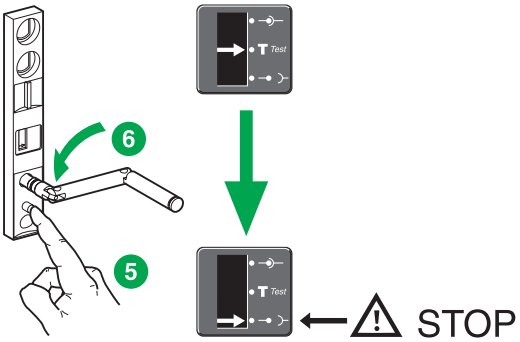

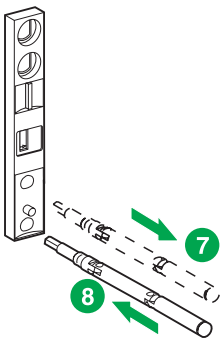

The circuit breaker is in "disconnected" position.

Racking

For complete information on Masterpact handling and mounting, see the installation manual(s).

Before mounting the circuit breaker, make sure it matches the chassis.

Removing the rails

Press the release tabs and pull the rails out.

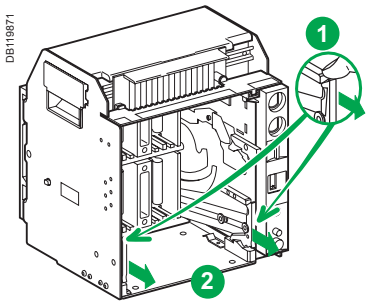

Press the release tabs to push the rails in.

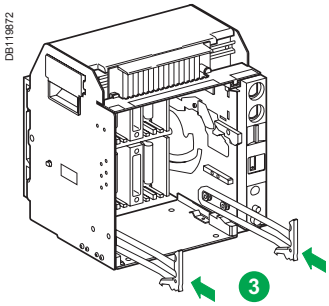

Inserting Masterpact

Position the circuit breaker on the rails. Check that it rests on all four supports.

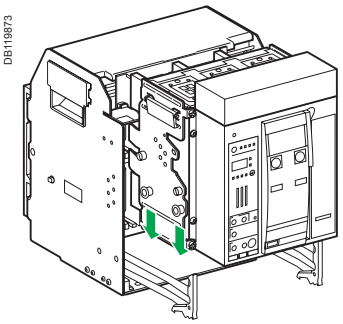

Open the circuit breaker (in any case, it opens automatically during connection).

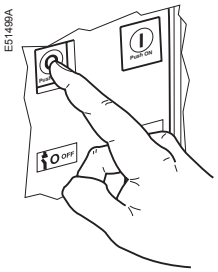

If you cannot insert the circuit breaker in the chassis, check that the mismatch protection on the chassis corresponds to that on the circuit breaker.

Push the circuit breaker into the chassis, taking care not to push on the control unit.

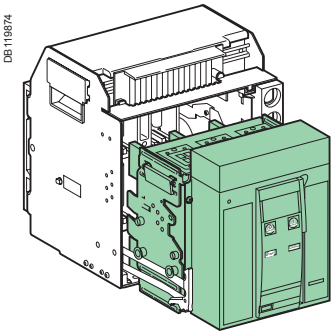

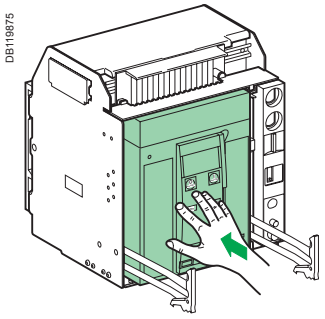

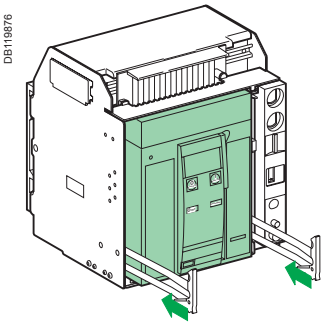

Racking

Racking the circuit breaker from the "disconnected" to "test" position, then to "connected" position

The device is in "disconnected" position.



The device is in "test" position.
Remove the crank or continue to "connected" position.

The device is in "test" position.

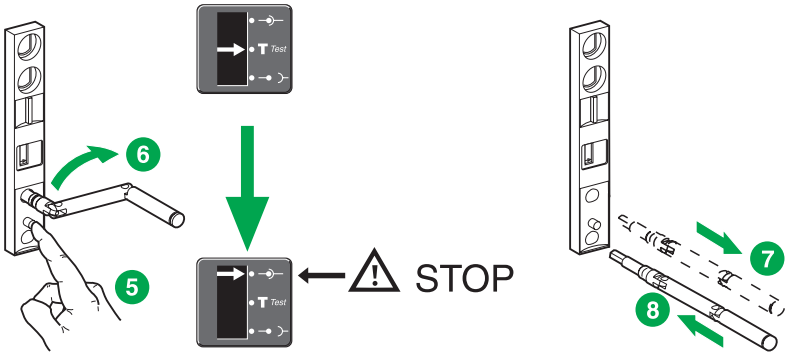

The device is in "connected" position.

Locking the circuit breaker in position

Padlocks and keylocks may be used together.

Combination of locking systems

To disable connection of the circuit breaker in "disconnected" position in the chassis, use as needed:

- one to three padlocks
- one or two keylocks
- a combination of the two locking systems.

If specified when ordering the chassis, this locking function may be adapted to operate in all positions ("connected", "test" and "disconnected"), instead of in "disconnected" position alone.

Disabling connection when the circuit breaker is in "disconnected" position, using one to three padlocks (maximum shackle diameter 5 to 8 mm)

Locking

Circuit breaker in "disconnected" position.

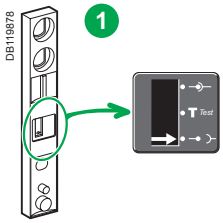

Pull out the tab.

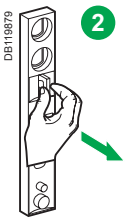

Insert the shackle (max. diameter 5 to 8 mm) of the padlock(s).

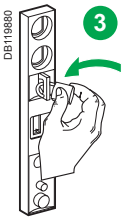

The crank cannot be inserted.

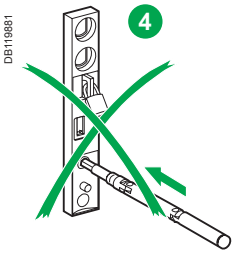

Unlocking

Remove the padlock(s).

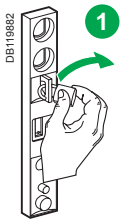

Release the tab.

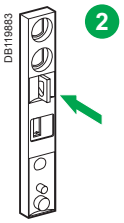

The crank can be inserted.

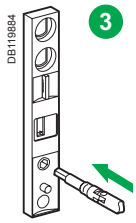

Locking the circuit breaker in position

Padlocks and keylocks may be used together.

Disabling connection when the circuit breaker is in "disconnected" position, using one or two keylocks.

Locking

Circuit breaker in "disconnected" position.

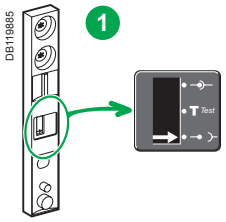

Turn the key(s).

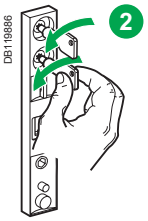

Remove the key(s).



The crank cannot be inserted.

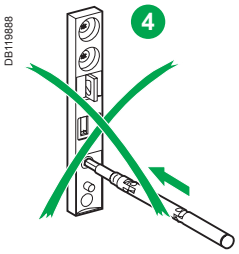

Unlocking

Insert the key(s).

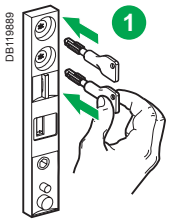

Turn the key(s).

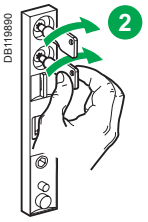

The crank can be inserted.

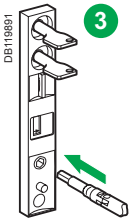

Three types of keylocks are available

RONIS

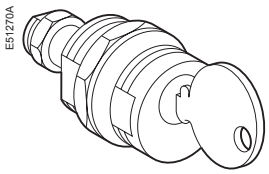

PROFALUX

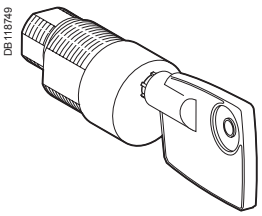

CASTELL

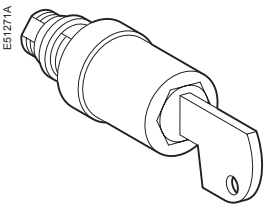

Locking the circuit breaker in position

Locking the circuit breaker when the door is open

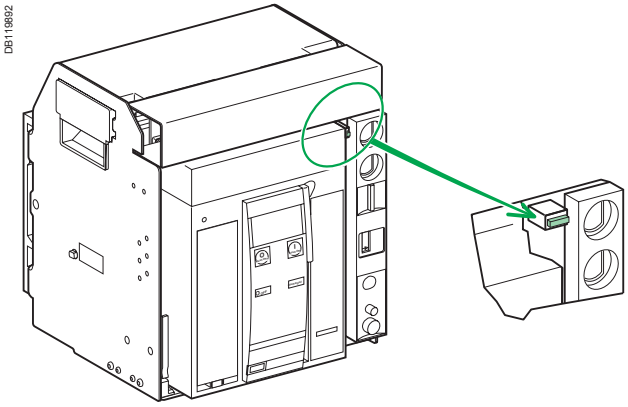

When the door is open, the crank cannot be inserted.

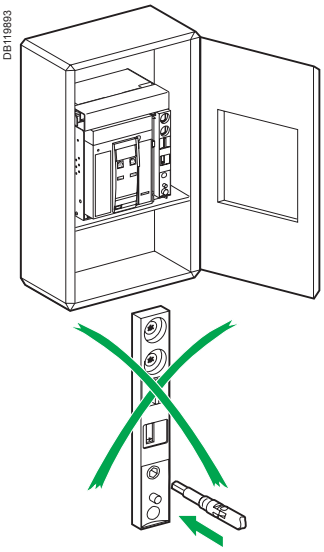

When the door is closed, the crank can be inserted.

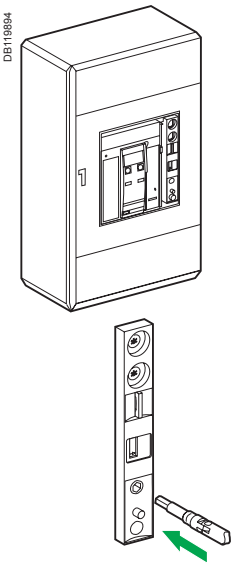

Locking the safety shutters
Padlocking inside the chassis

Four locking possibilities: using one or two padlocks (maximum shackle diameter 5 to 8 mm) for each shutter

Top and bottom shutters not locked.

DB119895

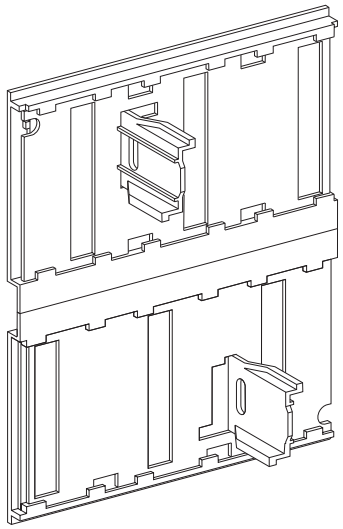

Top shutter not locked.
Bottom shutter locked.

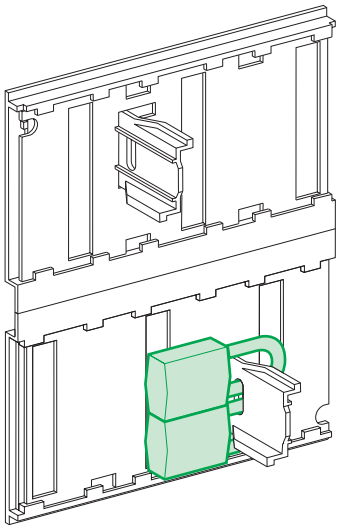

Top shutter locked.
Bottom shutter not locked.

DB119896

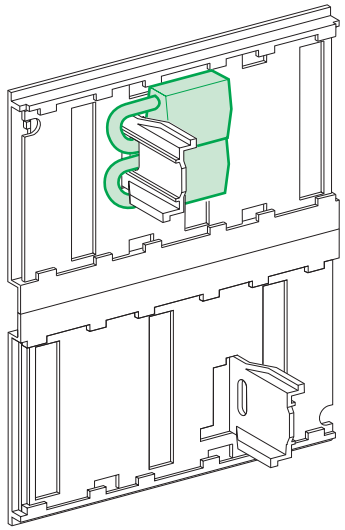

Top and bottom shutters locked.

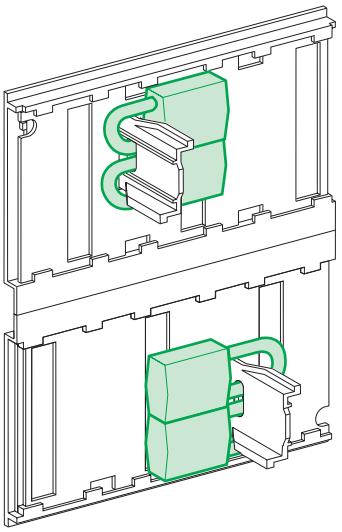

Identification of the connection terminals

Layout of terminal blocks

DB119897

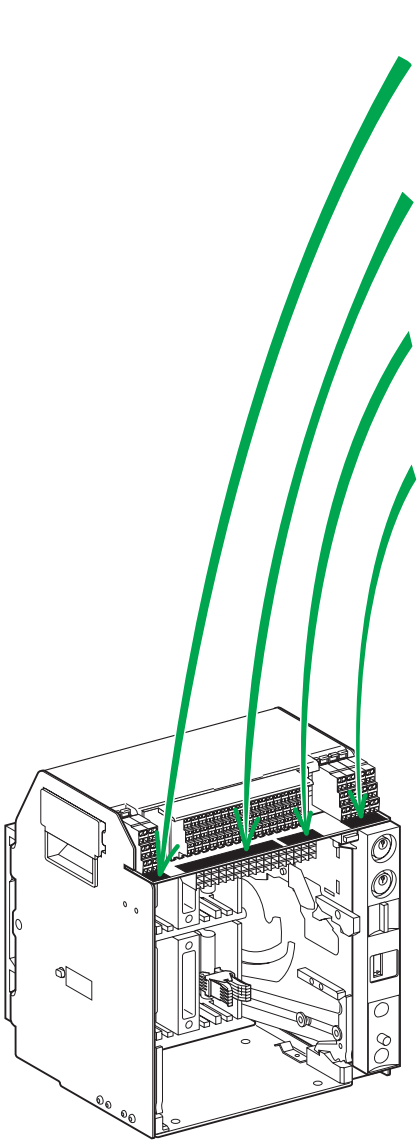

CD2	CD1
824	814
822	812
821	811

Com		UC1		UC2		UC3	M2C/UC4	SDE2/Res	SDE1	MN/MX2	MX1	XF	PF	MCH
E5	E6	Z5	M1	M2	M3	F2	484/V3	184/K2	84	D2/C12	C2	A2	254	B2
E3	E4	Z3	Z4	T3	T4	VN	474/V2	182	82	C13	C3	A3	252	B3
E1	E2	Z1	Z2	T1	T2	F1	471/V1	181/K1	81	D1/C11	C1	A1	251	B1

OF4	OF3	OF2	OF1
44	34	24	14
42	32	22	12
41	31	21	11

CE3	CE2	CE1	CT1
334	324	314	914
332	322	312	912
331	321	311	911

Operation

Circuit breaker

The ON/OFF indication contacts signal the status of the device main contacts.

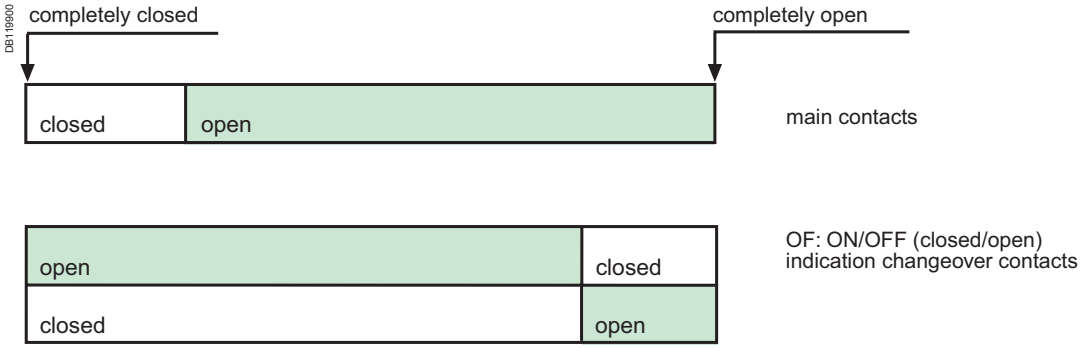

Chassis

The carriage switches indicate the "connected", "test" and "disconnected" positions.

For information on the separation distance of the main circuits in the "test" and "disconnected" positions, see page 16.

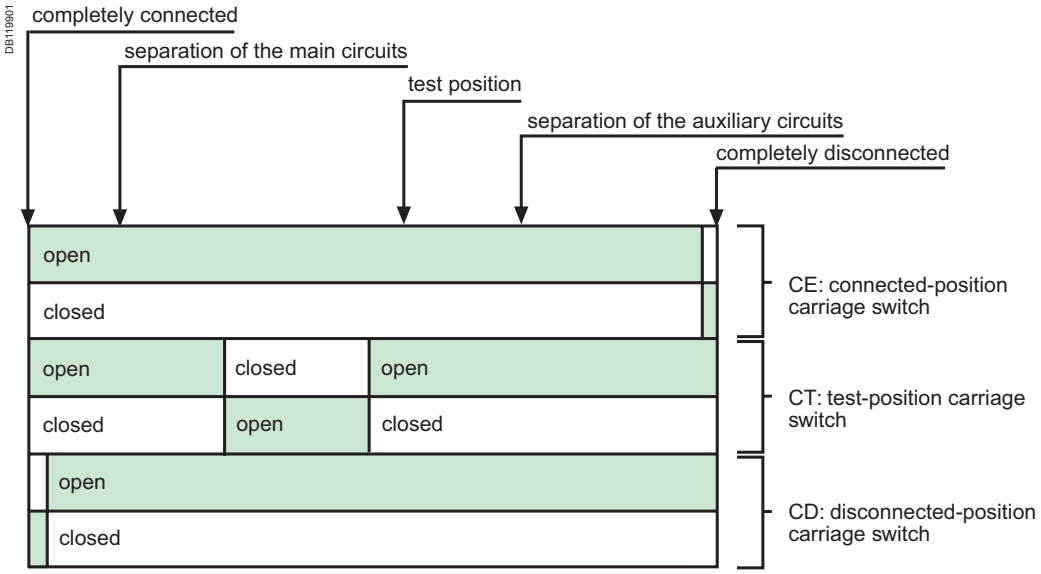

Electrical diagrams
Fixed and drawout devices

The diagram is shown with circuits de-energised, all devices open, connected and charged and relays in normal position.

Power | **Control unit** | **Remote operation**

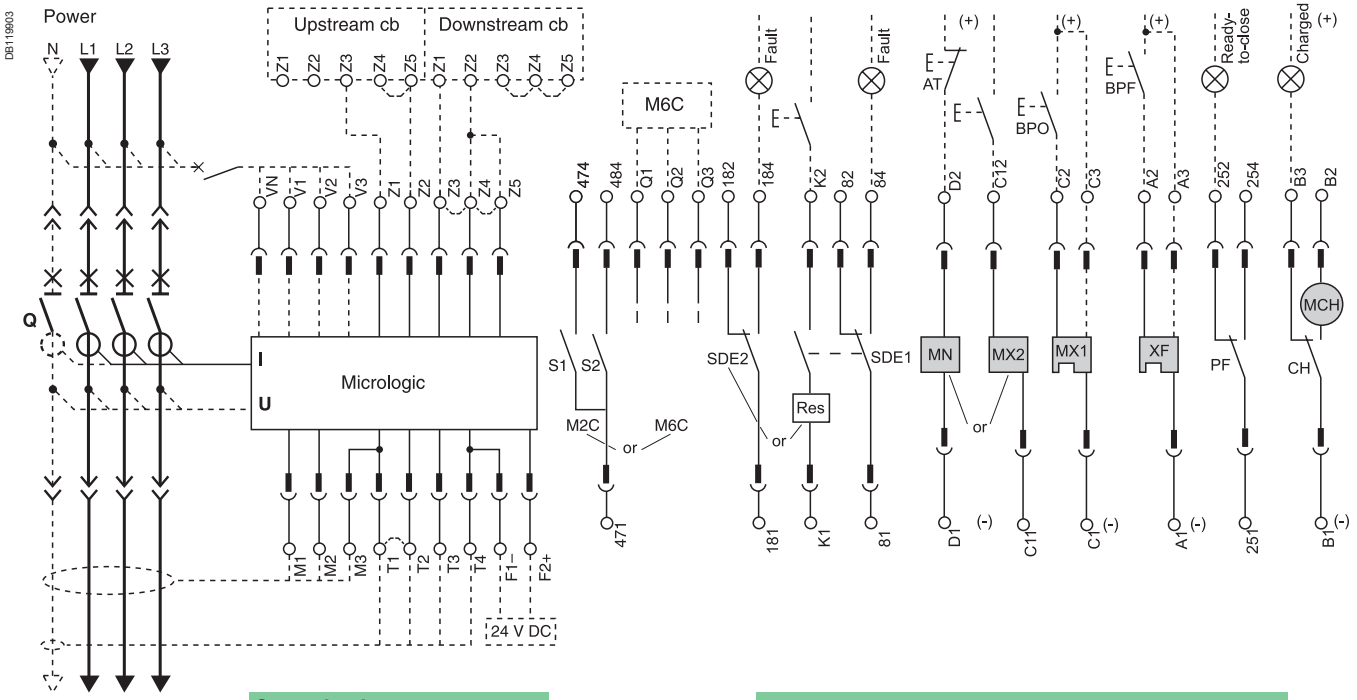

Control unit

Com		UC1		UC2		UC3	UC4
E5	E6	Z5	M1	M2	M3	F2+	V3
E3	E4	Z3	Z4	T3	T4	VN	V2
E1	E2	Z1	Z2	T1	T2	F1 –	V1

Remote operation

SDE2	SDE1	MN / MX2	MX1	XF	PF	MCH
184	84	D2 / C12	C2	A2	254	B2
182	82		C3	A3	252	B3
181	81	D1 / C11	C1	A1	251	B1

A	P	H	Control unit	Remote operation
■	■	■	**Com** : E1-E6 communication	**SDE2** : Fault-trip indication contact
■	■	■	**UC1** : Z1-Z5 zone selective interlocking; Z1 = ZSI OUT SOURCE Z2 = ZSI OUT; Z3 = ZSI IN SOURCE Z4 = ZSI IN ST (short time) Z5 = ZSI IN GF (earth fault)	**SDE1** : Fault-trip indication contact (supplied as standard)
■	■	■	M1 = Vigi module input (Micrologic 7)	**MN** : Undervoltage release **or** **MX2** : Shunt release
■	■	■	**UC2** : T1, T2, T3, T4 = external neutral;	**MX1** : Shunt release (standard or communicating)
■	■	■	M2, M3 = Vigi module input (Micrologic 7)	**XF** : Closing release (standard or communicating)
■	■	■	**UC3** : F2+, F1– external 24 V DC power supply	**PF** : "Ready to close" contact
	■	■	VN external voltage connector	**MCH** : Gear motor (*)
	■	■	**UC4** : V1, V2, V3 optional external voltage connector	***Note:*** *when communicating MX or XF releases are used, the third wire (C3, A3) must be connected even if the communications module is not installed.*

***A**: Digital ammeter*
***P**: A + power meter + programmable protection*
***H**: P + harmonics*

Electrical diagrams
Fixed and drawout devices

Indication contacts

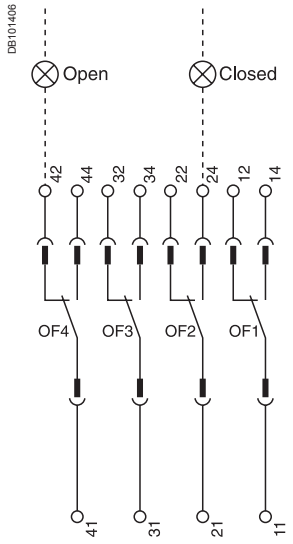

Chassis contacts

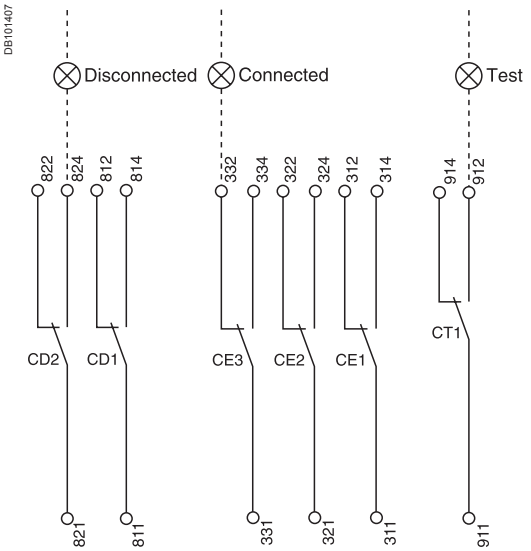

Indication contacts

OF4	OF3	OF2	OF1
44	34	24	14
42	32	22	12
41	31	21	11

Chassis contacts

CD2	CD1	CE3	CE2	CE1	CT1
824	814	334	324	314	914
822	812	332	322	312	912
821	811	331	321	311	911

Indication contacts

OF4 / OF3 / OF2 / OF1: ON/OFF indication contacts

Chassis contacts

CD2-CD1: Disconnected-position

CE3-CE2-CE1: Connected-position

CT1: Test-position contacts

(*) 440/480 V AC gear motor for charging
(380 V motor + additional resistor)

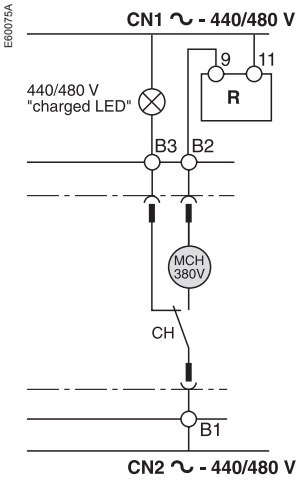

Key:

Drawout device only

XXX *SDE1, OF1, OF2, OF3, OF4 supplied as standard*

Interconnected connections (only one wire per connection point)

Initial tests
Procedure

These operations must be carried out in particular before using a Masterpact device for the first time.

A general check of the circuit breaker takes only a few minutes and avoids any risk of mistakes due to errors or negligence.
A general check must be carried out:
- prior to initial use
- following an extended period during which the circuit breaker is not used.

A check must be carried out with the entire switchboard de-energised.
In switchboards with compartments, only those compartments that may be accessed by the operators must be de-energised.

Electrical tests
Insulation and dielectric-withstand tests must be carried out immediately after delivery of the switchboard. These tests are precisely defined by international standards and must be directed and carried out by a qualified expert.

Prior to running the tests, it is absolutely necessary to:
- disconnect all the electrical auxiliaries of the circuit breaker (MCH, MX, XF, MN, Res electrical remote reset)
- remove the long-time rating plug on the 5.0 P, 5.0 H control units. Removal of the rating plug disconnects the voltage measurement input.

Switchboard inspection
Check that the circuit breakers are installed in a clean environment, free of any installation scrap or items (tools, electrical wires, broken parts or shreds, metal objects, etc.).

Conformity with the installation diagram
Check that the devices conform with the installation diagram:
- breaking capacities indicated on the rating plates
- identification of the control unit (type, rating)
- presence of any optional functions (remote ON/OFF with motor mechanism, auxiliaries, measurement and indication modules, etc.)
- protection settings (long time, short time, instantaneous, earth fault)
- identification of the protected circuit marked on the front of each circuit breaker.

Condition of connections and auxiliaries
Check device mounting in the switchboard and the tightness of power connections.
Check that all auxiliaries and accessories are correctly installed:
- electrical auxiliaries
- terminal blocks
- connections of auxiliary circuits.

Operation
Check the mechanical operation of the circuit breakers:
- opening of contacts
- closing of contacts.

Check on the control unit
Check the control unit of each circuit breaker using the respective user manuals.

What to do when the circuit breaker trips ?

Note the fault

Faults are signalled locally and remotely by the indicators and auxiliary contacts installed on circuit breakers (depending on each configuration).

Identify the cause of tripping

A circuit must never be reclosed (locally or remotely) before the cause of the fault has been identified and cleared.
A fault may have a number of causes:

- depending on the type of control unit, fault diagnostics are available. See the user manual for the control unit.
- depending on the type of fault and the criticality of the loads, a number of precautionary measures must be taken, in particular the insulation and dielectric tests on a part of or the entire installation. These checks and test must be directed and carried out by qualified personnel.

Inspect the circuit breaker following a short-circuit

- Check the arc chutes
- Check the contacts
- Check the tightness of connections (see the device installation manual)
- Check the disconnecting-contact clusters.

Reset the circuit breaker

The circuit breaker can be reset locally or remotely.

Recommended maintenance program

Maintenance for normal operating conditions, i.e. normal ambient temperature (-5°C to +55°C) and normal atmosphere.

Type of circuit breaker	Max. number of cycles	Parts requiring replacement, depending on the number of cycles at rated load			
		Arc chutes	Main contacts	MCH rod springs	MX/XF/MN releases
NT06 to 10 type H1/H2	12500	440 V: 6000 690 V: 3000	440 V: 6000 690 V: 3000	12500	12500
NT12 type H1/H2	12500	440 V: 6000 690 V: 2000	440 V: 6000 690 V: 2000	12500	12500
NT16 type H1/H2	12500	440 V: 3000 690 V: 1000	440 V: 3000 690 V: 1000	12500	12500
NT06 to 10 type L1	12500	440 V: 3000 690 V: 2000	440 V: 3000 690 V: 2000	12500	12500

Masterpact NT NAVY
What must be maintained and why ?

53341A-56

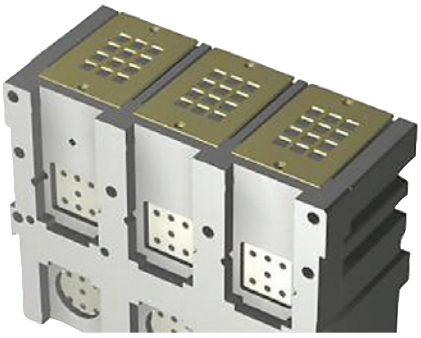

The case

The case is an essential element in the circuit breaker. First of all, it ensures a number of safety functions:

■ functional insulation between the phases themselves and between the phases and the exposed conductive parts in order to resist transient overvoltages caused by the distribution system

■ a barrier avoiding direct user contact with live parts

■ protection against the effects of electrical arcs and overpressures caused by short-circuits.

Secondly, it serves to support the entire pole operating mechanism as well as the mechanical and electrical accessories of the circuit breaker.

On the case, there should be:

■ no traces of grime (grease), excessive dust or condensation which all reduce insulation

■ no signs of burns or cracks which would reduce the mechanical solidity of the case and thus its capacity to withstand short-circuits.

Preventive maintenance for cases consists of a visual inspection of its condition and cleaning with a dry cloth or a vacuum cleaner.

All cleaning products with solvents are strictly forbidden. It is advised to measure the insulation every five years and following trips due to a short-circuit.

The case must be replaced if there are signs of burns or cracks.

PICO0002A-40



Arc chutes

During a short-circuit, the arc chute serves to extinguish the arc and to absorb the high level of energy along the entire path of the short-circuit. It also contributes to arc extinction under rated current conditions. An arc chute that is not in good condition may not be capable of fully clearing the short-circuit and ultimately result in the destruction of the circuit breaker. The arc chutes must be regularly checked. The fins of the arc chutes may be blackened (due to the gases produced at In) but must not be significantly damaged. What is more, the filters must not be blocked to avoid internal overpressures. It is advised to use a vacuum cleaner rather than a cloth to remove dust from the outside of the arc chutes.

DB104447A



Main contacts

The contacts make and break the current under normal conditions (rated current for the installation) and under exceptional conditions (overloads and short-circuits). The contacts are eroded by the many opening and closing cycles and can be particularly deteriorated by short-circuit currents.

Worn contacts may result in abnormal temperature rise and accelerate device ageing.

It is imperative to remove the arc chutes and visually check contact wear at least once a year and following each short-circuit.

The contact-wear indicators constitute an absolute minimum value that must not be overrun.

To plan and reduce the number of shutdowns, an electronic wear counter is available with the Micrologic P and H. A visual check is required when the counter reaches 100. When the counter reaches 300, the contacts must be replaced.

Masterpact NT NAVY
What must be maintained and why ?

PB100766A-56

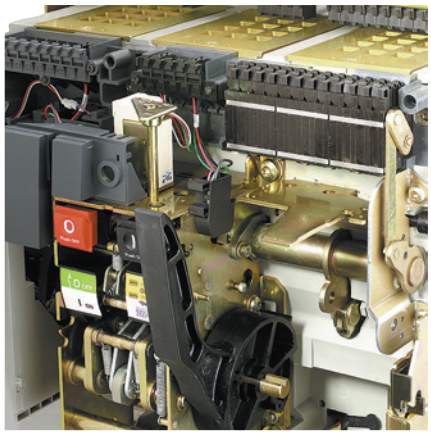

Device and chassis mechanisms

Mechanical operation of the circuit breaker may be hindered by dust, knocks, aggressive atmospheres, no greasing or excessive greasing. Operating safety is ensured by dusting and general cleaning, proper greasing and regular opening and closing of the circuit breaker.

■ Dusting

Dusting is best carried out using a vacuum cleaner.

■ Cleaning

Cleaning should be carried out using a cloth or brush that is perfectly clean and dry, without using any solvents, avoiding greased parts except for grease on electrical contacts.
Application of products under pressure or containing solvents (trichloroethane, trichloroethylene) is strictly forbidden (e.g. WD40).
The main problems of products under pressure are the following:
□ it may be impossible to regrease inaccessible lubrication points (greased for the life of the product)
□ corrosion of points that are not regreased
□ damage caused by the pressure of the product
□ risk of temperature rise due to the presence of an insulating solvent in the contact zones
□ elimination of special protection
□ deterioration of plastic materials.

PB100764A-56



■ Greasing

This operation is carried out after cleaning on certain mechanical parts as described in the maintenance procedures, using the various greases recommended by Schneider Electric. Grease must not be over applied because the excess, if mixed with dust, may result in mechanism malfunctions.
Generally speaking, under normal operating conditions, the pole-operating mechanism does not require any regreasing (greased for the life of the product).
□ the clusters and disconnecting-contacts must be greased according to the defined intervals using the greases indicated by Schneider Electric.
□ the main contacts must not be greased.

■ Operating cycles

The imperative need to ensure continuity of service in an installation generally means that power circuit breakers are rarely operated. If, on the one hand, an excessive number of operating cycles accelerates device ageing, it is also true that a lack of operation over a long period can result in mechanical malfunctions. Regular operation is required to maintain the normal performance level of each part involved in the opening and closing cycles.
In installations where power circuit breakers are used in source changeover systems, it is advised to periodically operate the circuit breaker for the alternate source.

Masterpact NT NAVY
What must be maintained and why ?

056421NA-29



Auxiliary circuits

■ **Control auxiliaries**

MX and XF shunt releases are respectively used to remotely open and close the circuit breaker using an electrical order or by a supervisor via a communication network.
The MN undervoltage release is used to break the power circuit if the distribution-system voltage drops or fails in order to protect life (emergency off) or property.
Communicating MX and XF releases and MN releases are continuously supplied and the internal electronic components may suffer accelerated ageing if there is temperature rise in the circuit breaker.
Preventive maintenance consists in periodically checking operation at minimum values. Depending on the operating and environment conditions, it is advised to estimate their service life using the "service life" software (1) and to replace them if necessary to avoid any risk of non-operation when they are needed.

056455NA-37



■ **Auxiliary wiring**

Auxiliary wiring is used to transmit orders to the various control devices and to transmit status-condition information. Incorrect connections or damaged insulation may result in either non-operation of the circuit breaker or nuisance tripping.
Auxiliary wiring must be regularly checked and replaced as needed, particularly if there are vibrations, high ambient temperatures or corrosive atmospheres.

056419NA-30

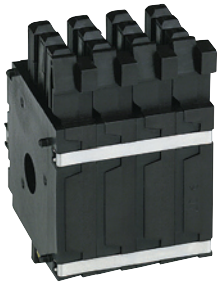

■ **Indication contacts**

The contacts indicating the status of the circuit-breaker (ON / OFF), of the chassis (CE, CD, CT), a trip due to an electrical fault (SDE) or that the circuit breaker is ready to close (PF) provide the operator with the status information required to react correspondingly. Any incorrect indications may result in erroneous device operation that could endanger life and property. Contact failure (wear, loose connections) may result from vibrations, corrosion or abnormal temperature rise and preventive maintenance must ensure that contacts correctly conduct or isolate according to their positions.

056420NA-29



■ **Gear motor**

The gear motor (MCH) automatically recharges the operating-mechanism springs as soon as the circuit breaker is closed. The gear motor makes it possible to instantaneously reclose the device following an opening. This function may be indispensable for safety reasons. The charging lever serves simply as a backup means if the auxiliary voltage fails.
Given the mechanical forces exerted to charge the mechanism, the gear motor wears quickly. Periodic checks on gear-motor operation and the charging time are required to ensure the device closing function.

(1) For more information, contact your Schneider Electric after-sales support department.

Masterpact NT NAVY What must be maintained and why ?



Electronic trip unit

If an electric fault occurs in the installation, the electronic trip unit detects the fault and orders the circuit breaker to open and thus protect life and property. Electronic components and circuit boards are sensitive to the environment (ambient temperature, humid and corrosive atmospheres) and to severe operating conditions (magnetic fields, vibrations, etc.). To ensure correct operation, it is necessary to periodically check:

- the chain of action resulting in a trip
- the response time as a function of the level of the fault current.
- depending on the operating and environment conditions, it is advised to estimate their service life using the "service life" software (1) and to replace them if necessary to avoid any risk of non-operation when they are needed.



Communication module and accessories

Via the communication bus, the communication option transmits data to a remote site for use by various departments (maintenance, management, production, etc.). A break in the transmission of data can result in:

- production losses due to unawareness concerning the status of a circuit breaker
- financial losses due to incorrect system management
- diagnostic errors
- etc.

Periodic checks on the orders (read, write, commands) transmitted by the communication bus are required to maintain a high degree of reliability and confidence in the communication system.

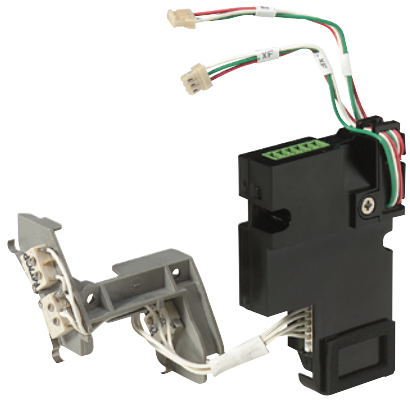

(1) For more information, contact your Schneider Electric after-sales support department.

Masterpact NT NAVY
What must be maintained and why ?

Connections

The connections between the various distribution systems in a switchboard (busbars, cables) and the switchgear are a major source of heat loss.
Incorrect tightening may lead to thermal runaway which in turn can provoke damage to the device, the cable insulation and even result in a short-circuit and/or a fire.
This type of malfunction is often due to disregard for installation requirements during switchboard assembly.
Note: *connections must never use different materials (copper / aluminium).*

P4270022-28

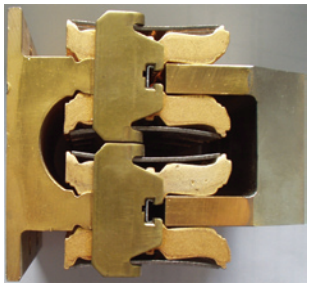

■ **Sliding connections (chassis)**

They are made up of two parts, the clusters and disconnecting contacts. This type of connection is critical and requires periodic cleaning in compliance with the described procedures. The grease facilitates the connection between the clusters and the disconnecting contacts and avoids damaging the silver-coated surface by reducing the racking-in friction.
In sulphurous (corrosive) atmospheres (H_2S / SO_2), it is necessary to implement the cleaning procedure using the Thiourea solution, with mandatory regreasing using the specified fluorinated grease. This type of grease protects the silver and copper-coated contacts against sulphuration. Because silver or copper sulphide being insulating it provokes an increase in the contact resistance and thus greater temperature rise.
The grease breaks down over time and it is therefore necessary to replace it regularly.

PB100786-40

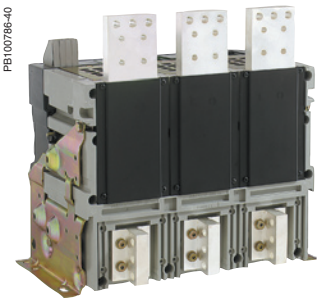

■ **Fixed connections**

Connections using lugs or bars.
When made in compliance with Schneider Electric recommendations (tightening torque, 8.8 hardware and contact washer), this type of connection does not require any particular maintenance. Otherwise, regularly check the temperature-rise points (change in colour of copper or tinning), dismantle the connections, clean and scrape the contact surfaces, then reassemble the connections using new hardware.
Check the terminals.

Recommended preventive maintenance and time intervals

The maintenance guide that must be carried out every one, two or five years on Masterpact NT NAVY subassemblies and the level of competence required on the part of service agents are described in the tables after.
At the end of each five year period, the maintenance guide must be systematically repeated.
These maintenance operations apply for normal operating and environment conditions as defined below.

Normal operating and environment conditions

Temperature	Average annual temperature < 30 °C outside the switchboard (Ta)
Percent load	≤ 80 % of In at 70 % of the time
Harmonics	Harmonic current per phase < 10 % of In
Relative humidity	< 85 %
Corrosive atmosphere	Device installed in environment category 3C1
Salt environment	Permanent salt mist
Dust	Low in operation, and strong during maintenance operation Device are not protected in cubicle
Vibration	Permanent vibration < 0.5 g, < 100 Hz

Level II preventive maintenance recommended every year

Level II

Minor preventive-maintenance operations such as greasing and operating checks, as well as repairs by standard exchange of certain assemblies, carried out by a certified customer employee according to the manufacturer maintenance instructions.

Check	Year					Tool	Procedure number	Duration
	1	2	3	4	5			
Device								
Check the general condition of the device (escutcheon, control unit, case, chassis, connections)	■	■	■	■	■	None	device NII_1_1.pdf	5 min
Mechanism								
Open/close device manually and electrically	■	■	■	■	■	None	mechanism NII_1_1.pdf	1 min
Charge device electrically	■	■	■	■	■	None	mechanism NII_1_2.pdf	1 min
Check complete closing of device's poles	■	■	■	■	■	None	mechanism NII_1_3.pdf	1 min
Check number of device operating cycles	■	■	■	■	■	Operation counter	mechanism NII_1_4.pdf	1 min
Breaking unit (arc chutes + contacts)								
Check the filters cleanlines and the fixing of the arc-chute chambers	■	■	■	■	■	Dynamometric crank	breaking unit NII_1_1.pdf	3 min
Control auxiliaries								
Check auxiliary wiring and insulation	■	■	■	■	■	None	auxiliaries NII_1_1.pdf	5 min
Control unit								
Trip control unit using test tool and check operation of contacts SDE1 and SDE2	■	■	■	■	■	HHTK or FFTK	control unit NII_1_1.pdf	5 min
Device locking								
Open and close keylocks installed on device	■	■	■	■	■	None	device locking NII_1_1.pdf	1 min
Open and close padlocking system installed on device	■	■	■	■	■	None	device locking NII_1_2.pdf	1 min
Chassis (optional)								
Remove device from chassis and put it back	■	■	■	■	■	None	chassis NII_1_1.pdf	3 min
Check operation of position contacts (CE, CT, CD, EF)	■	■	■	■	■	None	chassis NII_1_2.pdf	3 min
Chassis locking								
Open and close keylocks installed on chassis	■	■	■	■	■	None	chassis locking NII_1_1.pdf	1 min
Operate padlocking system	■	■	■	■	■	None	chassis locking NII_1_2.pdf	1 min
							Estimated time (1)	32 min

(1) Duration are given with testing device available.

Level III preventive maintenance recommended every 2 years

Level III

General preventive-maintenance operations such as general adjustments, trouble-shooting and diagnosis of breakdowns, repairs by exchange of components or functional parts, minor mechanical repairs, carried out by a qualified customer technician using the tools and measurement/setting devices specified in the manufacturer maintenance instructions.

Check	Year					Tool	Procedure number	Duration
	1	2	3	4	5			
Mechanism								
Check gear-motor charging time at 0,85 Un					■	Stop-watch + external power supply	mechanism NIII_2_1.pdf	10 min
Check general condition of mechanism		■		■	■	Screwdriver	mechanism NIII_2_2.pdf	5 min
Breaking unit (arc chutes + contacts)								
Check condition of breaking unit		■		■	■	Screwdriver	breaking unit NIII_2_1.pdf	5 min
Control auxiliaries								
Check operation of indication contacts (OF /PF/MCH)					■	Ohmmeter	auxiliaries NIII_2_1.pdf	20 min
Check closing operation of control auxiliary XF at 0.85 Un					■	External power supply	auxiliaries NIII_2_2.pdf	10 min
Check opening operation of control auxiliary MX at 0.70 Un					■	External power supply	auxiliaries NIII_2_3.pdf	10 min
Check operation of control auxiliary MN/MNR between 0.35 and 0.7 Un					■	External power supply	auxiliaries NIII_2_4.pdf	10 min
Check delay of MNR devices at 0.35 and 0.7 Un					■	External power supply	auxiliaries NIII_2_5.pdf	10 min
Check MX tripping time					■	Tester	auxiliaries NIII_2_6.pdf	10 min
Control unit								
Check tripping curves using test tool, signallling LED (tripped, overload) Save results on PC		■		■	■	FFTK FFTK report generator software	control unit NIII_2_1.pdf	15 min
Check the operation of M2C or M6C relays with Micrologic P or H					■	None	control unit NIII_2_2.pdf	
Check the operation of ZSI function (if wired)					■	FFTK	control unit NIII_2_3.pdf	
Chassis (optional)								
Dust and regrease chassis		■		■	■	Mobilith SCH100	chassis NIII_2_1.pdf	15 min
Check the operation of the safety shutters		■		■	■	None	chassis NII_1_3.pdf	1 min
Regrease disconnecting-contact clusters (specific case of corrosive athmospheres)		■		■	■	Mobilith SCH100	chassis NIII_2_2.pdf	30 min
Power connections								
Check and tighten loose connections	Only after a visual inspection					Dynamometric crank NIII_2_1.pdf	showing overheating marks	
							Estimated time (1)	2 h 30 min

(1) Duration are given with testing device available.

Level IV manufacturer diagnostic and replacement of components recommended every 5 years

Level IV

All the major preventive and corrective-maintenance work ensured by the Schneider Electric after-sales support department.
Contact your Schneider Electric after sales services, if you wish to have a device diagnostic as recommended every 5 years.

Connections and arc chutes

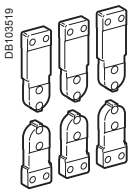

Front connections

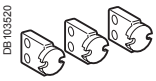

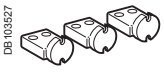

Rear connections

- Vertical
- Horizontal

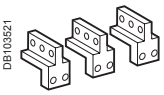

Vertical connection adapters

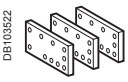

Cable-lug adapters

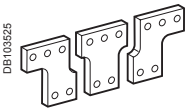

Spreaders

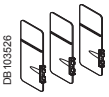

Interphase barriers

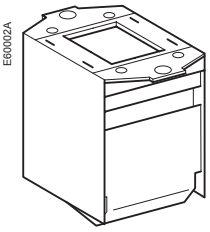

Arc chutes

- One chute per pole:
  - type H1
  - type L1

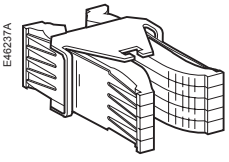

Disconnecting-contact clusters

- Quantities per device:
  - type H: 1250 A, 4 per pole - 1600 A, 6 per pole
  - type L1: 6 per pole

Micrologic control units

For more in-depth information, see the control-unit user manual.

E46108A

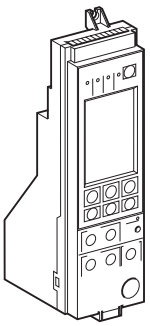

E51329A

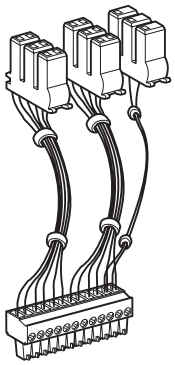

Micrologic control units

■ Standard equipment: one per device
■ (long-time rating plug and connectors not included, see below)
Micrologic 2.0
Micrologic 5.0
Micrologic 2.0 A
Micrologic 5.0 A
Micrologic 5.0 P
Micrologic 5.0 H
A, P and H connectors for drawout device.

■ Depending on the model, control units offer in addition:
□ fault indications
□ measurements (current, voltage, power, etc.)
□ harmonic analysis
□ communication.

DB103515

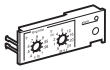

Long-time rating plugs

■ Standard equipment, one per device:
□ standard 0,4 to 1 x Ir
□ low 0.4 to 0.8 Ir
□ high 0.8 to 1 Ir
□ off (no long-time protection).

■ The plugs determine the setting range for the long-time protection.

DB103514

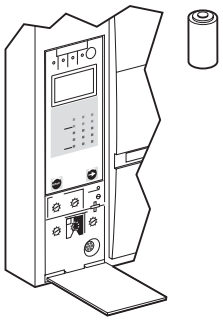

Replacement battery - Lead-sealed cover

DB103516

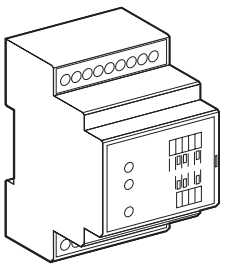

"Chassis" communication module

DB103517

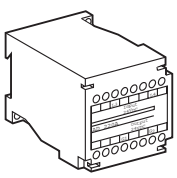

External power-supply module

Battery module

Micrologic control units
Test equipment

DB103518

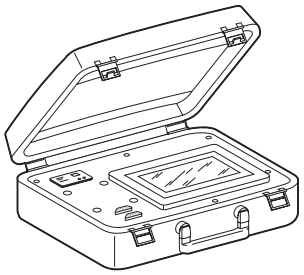

Portable test kit

DB103630

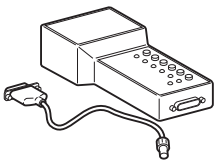

Mini test kit

Indication contacts

ON/OFF indication contacts (OF)

■ Standard equipment, 4 OF per device:
□ standard
□ low level
■ Connectors:
□ for fixed device
□ for drawout device.

■ OF contacts indicate the position of the main contacts
■ They trip when the minimum isolation distance between the main contacts is reached.

■ 4 changeover contacts
■ Breaking capacity at cos φ = 0.3 (AC12 / DC12 as per 60947-5-1):
□ standard, minimum current 10 mA / 24 V

V AC	240/380	6 A (rms)
	480	6 A (rms)
	690	6 A (rms)
V DC	24/48	2.5
	125	0.5
	250	0.3

□ low level, minimum current 1 mA / 4 V

V AC	24/48	5 A (rms)
	240	5 A (rms)
	380	5 A (rms)
V DC	24/48	5 / 2.5 A
	125	0.5 A
	250	0.3 A

"Fault-trip" indication contact (SDE/1)

■ Standard equipment on circuit breakers, one SDE/1 contact per device
■ Not available for switch-disconnector versions.

■ The contact provides a remote indication of device opening due to an electrical fault.

■ Changeover contact
■ Breaking capacity at cos φ = 0.3 (AC12 / DC12 as per 60947-5-1):
□ standard, minimum current 10 mA / 24 V

V AC	240/380	5 A (rms)
	480	5 A (rms)
	690	3 A (rms)
V DC	24/48	3 A
	125	0.3 A
	250	0.15 A

□ low level, minimum current 1 mA / 4 V

V AC	24/48	3 A (rms)
	240	3 A (rms)
	380	3 A (rms)
V DC	24/48	3 A
	125	0.3 A
	250	0.15 A

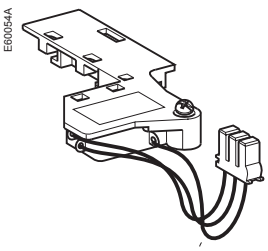

Additional "fault-trip" indication contact (SDE/2)

■ Optional equipment for circuit breakers, one additional SDE/2 contact per device:
□ standard
□ low level
□ connector for drawout device

■ The contact remotely indicates device opening due to an electrical fault.

■ Changeover contact
■ Breaking capacity at cos φ = 0.3 (AC12 / DC12 as per 60947-5-1):
□ standard, minimum current 10 mA / 24 V

V AC	240/380	5 A (rms)
	480	5 A (rms)
	690	3 A (rms)
V DC	24/48	3 A
	125	0.3 A
	250	0.15 A

□ low level, minimum current 1 mA / 4 V

V AC	24/48	3 A (rms)
	240	3 A (rms)
	380	3 A (rms)
V DC	24/48	3 A
	125	0.3 A
	250	0.15 A

Indication contacts

"Springs charged" limit switch contact (CH)

■ Equipment included with MCH gear motor, one CH contact per device.

■ The contact indicates the "charged" status of the operating mechanism (springs charged).

■ Changeover contact
■ Breaking capacity 50/60 Hz for AC power (AC12 / DC12 as per 60947-5-1):

V AC	240	10A(rms)
	380	6 A (rms)
	480	6 A (rms)
	690	3 A (rms)
V DC	24/48	3 A
	125	0.5 A
	250	0.25 A

E51332A

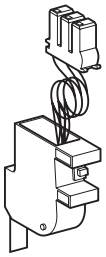

"Ready to close" contact (PF)

■ Optional equipment, one PF contact per device:
□ standard
□ low level
□ connector for drawout device.

■ The contact indicates that the device may be closed because all the following are valid:
□ circuit breaker is open
□ spring mechanism is charged
□ a maintained closing order is not present
□ a maintained opening order is not present.

■ Changeover contact
■ Breaking capacity at cos φ = 0.3 (AC12 / DC12 as per 60947-5-1):
□ standard, minimum current 10 mA / 24 V

V AC	240/380	5 A (rms)
	480	5 A (rms)
	690	3 A (rms)
V DC	24/48	3 A
	125	0.3 A
	250	0.15 A

□ low level, minimum current 1 mA / 4 V

V AC	24/48	3 A (rms)
	240	3 A (rms)
	380	3 A (rms)
V DC	24/48	3 A
	125	0.3 A
	250	0.15 A

Auxiliaries for remote operation

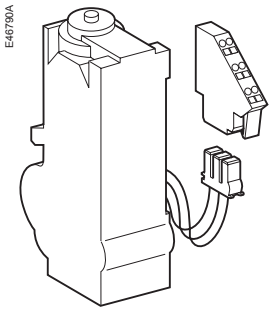

Gear motor (MCH)

■ Optional equipment, one MCH gear motor per device:
□ AC 50 / 60 Hz:
100/130
200/240
380/415
440/480
□ DC
24/30
□ connector for drawout device.

■ The gear motor automatically charges the spring mechanism.

■ Power supply:
□ V AC 50/60 Hz: 48/60
100/130 - 200/240 - 277
400/440 - 480
□ V DC: 24/30 - 48/60
100/125 - 200/250
■ Operating threshold:
0.85 to 1.1 Un
■ Consumption:
180 VA or W
■ Inrush current:
2 to 3 In for 0.1 second
■ Charging time:
3 seconds max.
■ Operating rate:
maximum 3 cycles per minute
■ CH contact

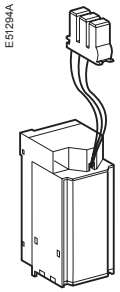

Opening releases MX/1 NAVY and MX/2 NAVY , closing release XF NAVY

■ Optional equipment, 1 or 2 MX releases per device, 1 XF per device
■ The function (MX or XF) is determined by where the coil is installed
■ NAVY and NAVY communicating versions:
□ 28 V DC
□ 115 V AC 50/60 Hz
□ 220 V AC 50/60 Hz
□ 380/440 V AC 50/60 Hz
■ Connector for drawout device.

■ The MX release instantaneously opens the circuit breaker when energised
■ The XF release instantaneously closes the circuit breaker when energised, if the device is "ready to close".

■ Power supply:
□ V AC 50 / 60 Hz:
24 48 - 100/130 - 200/250
- 240/277 - 380/480
□ V DC: 12 - 24/30
48/60 - 100/130
200/250
■ Operating threshold:
□ XF: 0.85 to 1.1 Un
□ MX: 0.7 to 1.1 Un
■ Consumption:
□ pick-up: 200 VA or W (80 ms)
□ hold: 4.5 VA or W
■ Circuit-breaker response time at Un:
□ XF: 55 ms ±10
□ MX: 50 ms ±10.

Wiring of control auxiliaries

Under pick-up conditions, the level of consumption is approximately 150 to 200 VA. Consequently, for low supply voltages (12, 24, 48 V), cables must not exceed a maximum length determined by the supply voltage and the cross-section of the cables.

■ The voltage measured across the MX/XF terminals must not be less than:
□ 80.5 V for MX 115 V AC
□ 154 V for MX 220 V AC
□ 266 V for MX 340-440 V AC
□ 18 V for MX 28 DC

Auxiliaries for remote operation

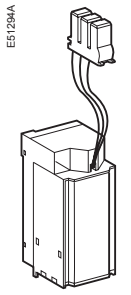

Instantaneous undervoltage releases (MN)

■ Optional equipment, 1 MN per device
■ Not compatible with the MX/2 opening release:
□ 100/130 AC: 50/60 Hz
□ 200/250 AC: 50/60 Hz
□ 380/480 AC: 50/60 Hz
connector for drawout device.

■ The MN release instantaneously opens the circuit breaker when its supply voltage drops.

■ Power supply:
□ V AC 50/60 Hz: 24/48 100/130 - 200/250 240/277 - 380/480
□ V DC: 24/30 - 48/60 100/130 - 200/250
■ Operating threshold:
□ opening: 0.35 to 0.7 Un
□ closing: 0.85 Un
■ Consumption:
□ pick-up: 200 VA or W (80 ms)
□ hold: 4.5 VA or W
■ Circuit-breaker response time at Un:
40 ms ± 10.

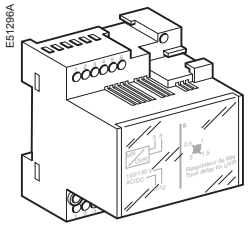

Delay unit for MN releases

■ Optional equipment, 1 MN with delay unit per device
■ Delay-unit:
□ 100/130 AC 50/60 Hz
□ 200/250 AC 50/60 Hz
□ 380/480 AC 50/60 Hz.

■ The unit delays operation of the MN release to eliminate circuit-breaker nuisance tripping during short voltage dips
■ The unit is wired in series with the MN and must be installed outside the circuit breaker.

■ Power supply V AC 50/60 Hz, V DC:
□ non adjustable: 100/130 - 200/250
□ adjustable: 48/60 - 100/130 200/250 - 380/480
■ Operating threshold:
□ opening: 0.35 to 0.7 Un
□ closing: 0.85 Un
■ Consumption:
□ pick-up: 200 VA or W (80 ms)
□ hold: 4.5 VA or W
■ Circuit-breaker response time at Un:
□ non adjustable: 0.25 second
□ adjustable: 0.5 - 0.9 - 1.5 - 3 seconds.

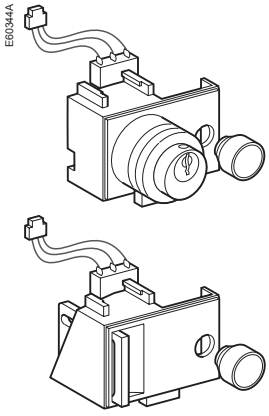

Electrical closing pushbutton (BPFE)

■ Optional equipment, 1 BPFE per device.

■ Located on the padlock or keylock locking system, this pushbutton carries out electrical closing of the circuit breaker via the XF release, taking into account all the safety functions that are part of the control/monitoring system of the installation
■ It connects to the input of the COM option.

Device mechanical accessories

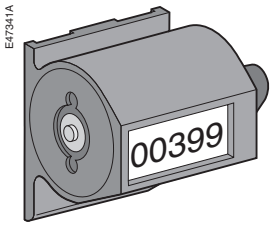

Operation counter (CDM)

- Optional equipment, one CDM per device.
- The operation counter sums the number of operating cycles.

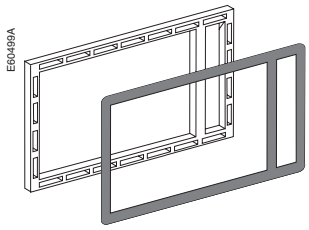

Escutcheon (CDP)

- Optional equipment, one CDP per device, for drawout device.
- The CDP increases the degree of protection to IP 40 and IK 07 (fixed and drawout devices).

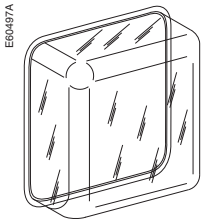

Transparent cover (CCP)

- Optional equipment, one CCP per device equipped with a CDP.
- Mounted with a CDP, the CCP increases the degree of protection to IP 54 and IK 10 (fixed and drawout devices).

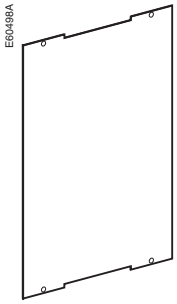

Blanking plate (OP)

- Optional equipment, one OP per device.
- Used with the escutcheon, this option closes off the door cut-out of a cubicle not yet equipped with a device. It may be used with the escutcheon for both fixed and drawout devices.

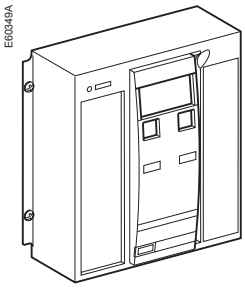

Front

- 1 per 3- or 4-pole device.



Charging handle

- 1 per device.

Device mechanical accessories

E60347A

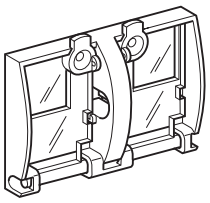

Transparent cover for pushbutton locking using a padlock, lead seal or screws

■ Optional equipment, one locking cover per device.

■ The transparent cover blocks access (together or separately) to the pushbuttons used to open and close the device

■ Locking requires a padlock, a lead seal or two screws.

E60346A

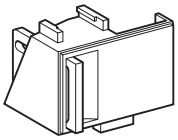

Device locking in the OFF position using a padlock

■ Optional equipment, one locking system per device.

■ The unit inhibits local or remote closing of the device

■ Up to three padlocks may be used for locking.

E60348A

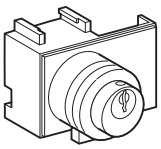

Device OFF position locking kit for keylocks

■ Optional equipment, one locking kit (without keylock) per device:
□ for Profalux keylo
□ for Ronis keylock
□ for Kirk keylocks
□ for Castell keyloc.

■ The kit inhibits local or remote closing of the device.

Ronis

E51286A

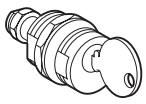

Profalux

DB119180

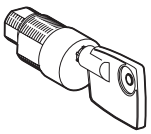

Keylocks required for the device OFF position locking kit

■ One keylock per locking kit:
□ Ronis
□ Profalux

Chassis accessories, carriage switches and parts.

Top shutter closed

E60030A

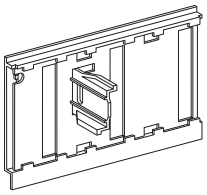

Bottom shutter closed

E60031A

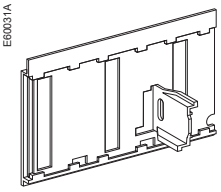

Safety shutters

■ Optional equipment
■ (set of shutters for top and bottom) drawout, front/rear connection: 3 poles.

■ Mounted on the chassis, the safety shutters automatically block access to the disconnecting contact cluster when the device is in the "disconnected" or "test" positions.

■ IP 20 for chassis connections
■ IP 40 for the disconnecting contact cluster.

If specified when ordering the chassis, this locking function may be adapted to operate in all positions ("connected", "test" and "disconnected"), instead of in "disconnected" position alone.

Circuit breaker locking in "disconnected" position

■ Optional equipment, one locking system per device:
□ for Profalux keylocks
□ for Ronis keylocks
□ for Castell keylocks
□ for Kirk keylocks
(keylocks not included).

■ Mounted on the chassis and accessible with the door closed, this system locks the circuit breaker in "disconnected" position using one or two keylocks.

Ronis

E51286A

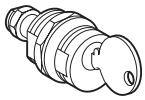

E51273A

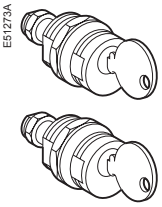

Profalux

DB119180

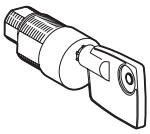

DB119191

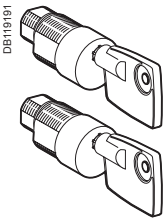

Keylocks required with the "disconnected" position locking system

■ One or two keylocks per locking system
□ Ronis
□ Profalux

Chassis accessories, carriage switches and parts.

E51498A

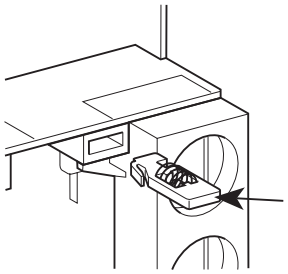

Racking interlock

■ Optional equipment, one racking interlock per chassis.

■ This device prevents insertion of the racking handle when the cubicle door is open.

■ It is mounted on the right-hand side of the chassis.

E60345A

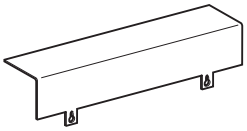

Auxiliary terminal shield (CB)

■ Optional equipment, one CB shield per chassis:
3 poles.

■ The shield prevents access to the terminal block of the electrical auxiliaries.

E46095A

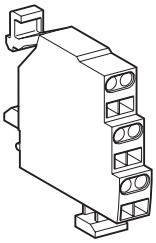

"Connected", "disconnected" and "test" position carriage switches (CE, CD, CT)

■ Optional equipment, one to six carriage switches

■ Standard configuration, 0 to 3 CE, 0 to 2 CD, 0 to 1 CT:
□ standard
□ low level.

■ The carriage switches indicate the three positions:
CE: connected position
CD: disconnected position (when the minimum isolation distance between the main contacts and the auxiliary contacts is reached)
CT: test position.

■ Changeover contact

■ Breaking capacity at cos φ = 0.3 (AC12 / DC12 as per 60947-5-1):

□ standard, minimum current 10 mA / 24 V

V AC	240	8 A (rms)
	380	8 A (rms)
	480	8 A (rms)
	690	6 A (rms)
V DC	24/48	2.5 A
	125	0.8 A
	250	0.3 A

□ low level, minimum current 1 mA / 4 V

V AC	24/48	5 A (rms)
	240	5 A (rms)
	380	5 A (rms)
V DC	24/48	2.5 A
	125	0.8 A
	250	0.3 A

E51336A

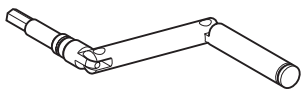

Crank

■ 1 per device.

Troubleshooting and solutions

Problem	Probable causes	Solutions
Circuit breaker cannot be closed locally or remotely	■ Circuit breaker padlocked or keylocked in the "open" position	□ disable the locking fonction
	■ Circuit breaker interlocked mechanically in a source changeover system	□ check the position of the other circuit breaker in the changeover system □ modify the situation to release the interlock
	■ Circuit breaker not completely connected	□ terminate racking in (connection) of the circuit breaker
	■ The reset button signalling a fault trip has not been reset	□ clear the fault □ push the reset button on the front of the circuit breaker
	■ Stored energy mechanism not charged	□ charge the mechanism manually □ if it is equipped with a an MCH gear motor, check the supply of power to the motor. If the problem persists, replace the gear motor (MCH)
	■ MX opening shunt release permanently supplied with power	□ there is an opening order. Determine the origin of the order. The order must be cancelled before the circuit breaker can be closed
	■ MN undervoltage release not supplied with power	□ there is an opening order. Determine the origin of the order. □ check the voltage and the supply circuit (U > 0.85 Un). If the problem persists, replace the release
	■ XF closing release continuously supplied with power, but circuit breaker not "ready to close" (XF not wired in series with PF contact)	□ cut the supply of power to the XF closing release, then send the closing order again via the XF, but only if the circuit breaker is "ready to close"
	■ Permanent trip order in the presence of a Micrologic P or H control unit with minimum voltage and minimum frequency protection in Trip mode and the control unit powered	□ Disable these protection functions on the Micrologic P or H control unit
Circuit breaker cannot be closed remotely but can be opened locally using the closing pushbutton	■ Closing order not executed by the XF closing release	□ check the voltage and the supply circuit (0.85 - 1.1 Un). If the problem persists, replace the XF release
Unexpected tripping without activation of the reset button signalling a fault trip	■ MN undervoltage release supply voltage too low ■ Load-shedding order sent to the MX opening release by another device	□ check the voltage and the supply circuit (U > 0.85 Un) □ check the overall load on the distribution system □ if necessary, modify the settings of devices in the installation
	■ Unnecessary opening order from the MX opening release	□ determine the origin of the order
Unexpected tripping with activation of the reset button signalling a fault trip	A fault is present : ■ overload ■ earth fault ■ short-circuit detected by the control unit	□ determine and clear the causes of the fault □ check the condition of the circuit breaker before putting it back into service
Instantaneous opening after each attempt to close the circuit breaker with activation of the reset button signalling a fault trip	■ Thermal memory	□ see the user manual of the control unit □ press the reset button
	■ Transient overcurrent when closing	□ modify the distribution system or the control-unit settings □ check the condition of the circuit breaker before putting it back into service □ press the reset button
	■ Closing on a short-circuit	□ clear the fault □ check the condition of the circuit breaker before putting it back into service □ press the reset button

Troubleshooting and solutions

Problem	Probable causes	Solutions
Circuit breaker cannot be opened remotely, but can be opened locally	■ Opening order not executed by the MX opening release	□ check the voltage and the supply circuit (0.7 - 1.1 Un). If the problem persists, replace the MX release
	■ Opening order not executed by the MN undervoltage release	□ drop in voltage insufficient or residual voltage (> 0.35 Un) across the terminals of the undervoltage release. If the problem persists, replace the MN release
Circuit breaker cannot be opened locally	■ Operating mechanism malfunction or welded contacts	□ contact a Schneider service centre
Circuit breaker cannot be reset locally but not remotely	■ Insufficient supply voltage for the MCH gear motor	□ check the voltage and the supply circuit (0.7 - 1.1 Un). If the problem persists, replace the MCH release
Nuisance tripping of the circuit breaker with activation of the reset button signalling a fault trip	■ Reset button not pushed-in completely	□ push the reset button in completely
Impossible to insert the crank in connected, test or disconnected position	■ A padlock or keylock is present on the chassis or a door interlock is present	□ disable the locking function
Impossible to turn the crank	■ The reset button has not been pressed	□ press the reset button
Circuit breaker cannot be removed from chassis	■ Circuit breaker not in disconnected position	□ turn the crank until the circuit breaker is in disconnected position and the reset button out
	■ The rails are not completely out	□ pull the rails all the way out
Circuit breaker cannot be connected (racked in)	■ Cradle/circuit breaker mismatch protection	□ check that the cradle corresponds with the circuit breaker
	■ The safety shutters are locked	□ remove the lock(s)
	■ The disconnecting-contact clusters are incorrectly positioned	□ reposition the clusters
	■ Cradle locked in disconnected position	□ disable the cradle locking function
	■ The reset button has not been pressed, preventing rotation of the crank	□ press the reset button
	■ The circuit breaker has not been sufficiently inserted in the cradle	□ insert the circuit breaker completely so that it is engaged in the racking mechanism
Circuit breaker cannot be locked in disconnected position	■ The circuit breaker is not in the right position	□ check the circuit breaker position by making sure the reset button is out
	■ The cranck is still in the cradle	□ remove the crank and store it
Circuit breaker cannot be locked in connected, test or disconnected position	■ Check that locking in any position is enabled	□ contact a Schneider Electric service centre
	■ The circuit breaker is not in the right position	□ check the circuit breaker position by making sure the reset button is out
	■ The cranck is still in the cradle	□ remove the crank and store it

Environmental conditions

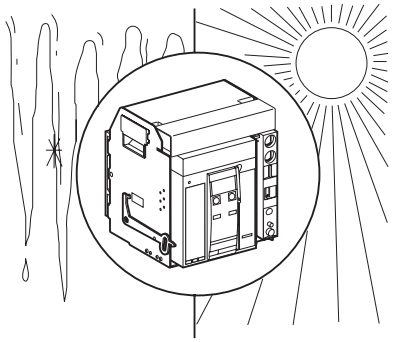

Ambient temperature

Masterpact NT NAVY devices can operate under the following temperature conditions:

- the electrical and mechanical characteristics are stipulated for an ambient temperature of -5 °C to +70 °C
- circuit-breaker closing is guaranteed down to -35 °C
- Masterpact NW NAVY (without the control unit) can be stored in an ambient temperature of -40 °C to +85 °C
- the control unit can be stored in an ambient temperature of -25 °C to +85 °C.

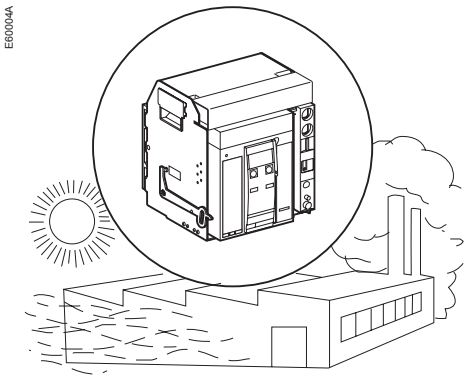

Extreme atmospheric conditions

Masterpact NT NAVY devices have successfully passed the tests defined by the following standards for extreme atmospheric conditions:

- IEC 60068-2-1: dry cold at -55 °C
- IEC 60068-2-2: dry heat at +85 °C
- IEC 60068-2-30: damp heat (temperature +55 °C, relative humidity 95%)
- IEC 60068-2-52 level 2: salt mist.

Masterpact NT NAVY devices can operate in the industrial environments defined by standard IEC 60947 (pollution degree up to 4).

It is nonetheless advised to check that the devices are installed in suitably cooled switchboards without excessive dust.

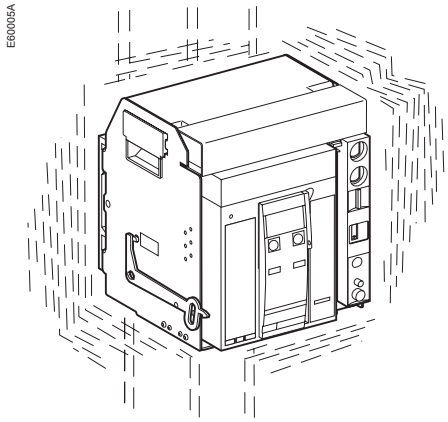

Vibrations

Masterpact NT NAVY devices resist electromagnetic or mechanical vibrations. Tests are carried out in compliance with standard IEC 60068-2-6 for the levels required by merchant-marine inspection organisations (Veritas, Lloyd's, etc.):

- 2 to 13.2 Hz: amplitude ±1 mm
- 22 to 50 Hz: constant acceleration 2 g
- 5 to 60 Hz: constant acceleration 2 g.

Excessive vibration may cause tripping, breaks in connections or damage to mechanical parts.

Mechanical shock

Masterpact NT NAVY devices are guaranteed to withstand mechanical shock levels. These are carried out in compliance with IEC 60068-2-27:

- 18 g 11 ms half-sine pulse.

Environmental conditions

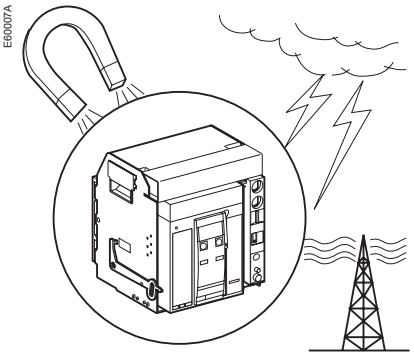

Electromagnetic disturbances

Masterpact NT NAVY devices are protected against:
- overvoltages caused by devices that generate electromagnetic disturbances
- overvoltages caused by an atmospheric disturbance or by a distribution-system outage (e.g. failure of a lighting system)
- devices emitting radio waves (radios, walkie-talkies, radar, etc.)
- electrostatic discharges produced by users.

Masterpact NT NAVY devices have successfully passed the electromagnetic-compatibility tests (EMC) defined by the following international standards:
- IEC 60947-2, appendix F.

The above tests guarantee that:
- no nuisance tripping occurs
- tripping times are respected.

Cleaning

- Non-metallic parts:

never use solvent, soap or any other cleaning product. Clean with a dry cloth only
- Metal parts:

clean with a dry cloth whenever possible. If solvent, soap or any other cleaning product must be used, make sure that it does not come into contact with non-metallic parts.

Notes

Notes

Schneider Electric Industries SAS
35, rue Joseph Monier
CS 30323
F - 92506 Rueil Malmaison Cedex

RCS Nanterre 954 503 439
Capital social 896 313 776 €
www.schneider-electric.com

As standards, specifications and designs change from time to time, please ask for confirmation of the information given in this publication.

This document has been printed on ecological paper

Design: Schneider Electric
Photos: Schneider Electric
Printed:

© 2009 - Schneider Electric - Tous droits réservés

GHD12556AA-05

06-2009