Installation and Quick Start Guide

NetShelter® Advanced 11000 Series 3 Phase High-Density Rack Power Distribution Units

APDU11590SM, APDU11550ME, APDU11550SW, APDU11550SM, APDU11551ME, APDU11455ME, APDU11455SW, APDU11455SM, APDU11454ME, APDU11454SW, APDU11454SM

Customer support and warranty information is available at **www.se.com.**

© 2025 Schneider Electric. All rights reserved. APC and the APC logo are trademarks of Schneider Electric SE or its subsidiaries. All other brands may be trademarks of their respective owners.

EN JPS31009 **11/2025**

Important Information

The NetShelter® Rack Power Distribution Unit (PDU) Advanced is suitable for installation in Information Technology Rooms in accordance with Article 645 of the National Electric Code and NFPA 75.

For more information about APC products, go to **www.se.com**.

See the **NetShelter Advanced 11000 Series 3-Phase High-Density Rack Power Distribution Units User Guide** for detailed information on installation and operation.

Enter your Rack PDU model number in the search bar at **www.se.com**, then select your rack PDU to view the product page, including all related documentation.

Warranty information is available at **www.se.com**.

You can register your product online at **www.se.com**.

NOTE: For important safety information, see the Safety Sheet included with your NetShelter Rack PDU Advanced.

⚠ WARNING

FIRE AND IMPACT HAZARD

The power supply cord assembly is heavy. When installed vertically, its weight may cause the plug to partially disconnect from the receptacle. This can result in a high-resistance (I^2R) connection and overheating, which can lead to fire. The plug is also heavy and if it falls, it can strike a person.

- Vertically installed cords, such as those used with Busway systems, must be positioned at intervals not exceeding 1.8 m (6 ft) using approved methods such as cable support grips, in accordance with the National Electrical Code, Article 368.

Failure to follow these instructions can result in death or serious injury.

NOTICE

The Rack PDU includes a supplemental protective earth terminal. If your rack-mounted computers connect to a Telecommunications Network or Cable Distribution Network, install a supplemental protective earth conductor. Be sure the installation's receptacle or socket outlet includes a reliable Protective Earthing Connection, as:

- The Rack PDU connects to protective earth through the plug on its power supply cord.
- The Rack PDU supplies protective earth to each connected computer server.

NOTICE

The Rack PDU supports a maximum ambient operating temperature of 60 °C (140 °F). If the ambient temperature exceeds 30 °C (86 °F), use properly sized 75 °C (167 °F) or 90 °C (194 °F) rated interconnection cord sets to connect the Rack PDU to your computer servers.

Follow the guidelines in accordance with the National Electrical Code (NFPA 70):

- Conductor ampacity is based on a 30°C (86 °F) ambient temperature.
- 75 °C (167 °F) conductors are derated by 0.88 at 40 °C (104 °F), 0.75 at 50 °C (122 °F), and 0.58 at 60 °C (140 °F).
- 90 °C (194 °F) conductors are derated by 0.91 at 40 °C (104 °F), 0.82 at 50 °C (122 °F), and 0.71 at 60 °C (140 °F).

Additional Documentation

You can find the user guide and other documentation for this product at *go2se.com/ref=<APDU11•••>*, where *APDU11•••* is the model number of your NetShelter Rack PDU Advanced. At the web page, select **Documentation > Product Documentation**.

You can also find documentation by scanning the QR code. All APDU11••• models share a documentation set.

Receiving and Unpacking

Inspect the equipment

Carefully inspect the exterior of the shipment immediately upon receipt. If you detect shipping damage, contact your shipping company and APC Customer Support at **www.se.com**.

The shipping materials are recyclable. Save them for later use, or dispose of them appropriately.

Storage

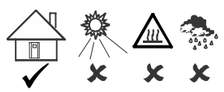

NOTICE

Leaving the equipment uncovered and exposed to the elements will cause damage and void the factory warranty.

Horizontal PDU Installation

NOTE: This procedure is only applicable for SKUs – APDU11455ME, APDU11455SW, APDU11455SM, APDU11454ME, APDU11454SW,and APDU11454SM.

The NetShelter Rack PDU Advanced can be installed to the horizontal accessory channel of a NetShelter rack using the horizontal rail kit.

NOTE: The mounting rail kit required for horizontal installation is included as part of the accessories packaged with the PDU.

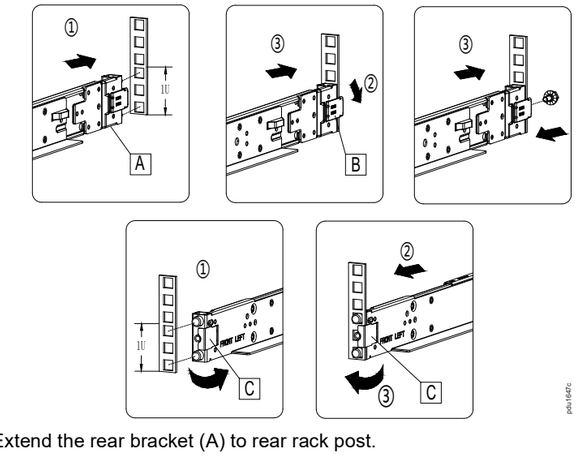

1. Extend the rear bracket (A) to rear rack post.
2. Keep the rail aligned with the rack post and push it to release the rail rear lock (B).
3. Align the rear bracket (A) with rack mounting holes and assemble it with rear rack post.
4. Rotate to release the front mounting latch (C).
5. Keep front end of rail aligned with rack mounting holes to install rail.
6. Close the front mounting latch (C) and be sure the rail is locked to the rack.
7. Slide the horizontal PDU (D) into the rail kit.

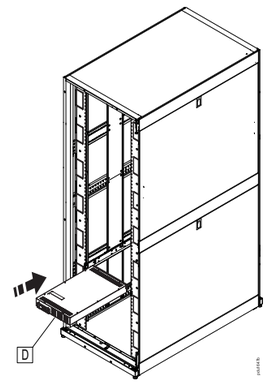

Vertical PDU Installation

NOTE: The procedure below applies only to SKUs – APDU11590SM, APDU11550SW, and APDU11550SM.

The NetShelter Rack PDU Advanced can be installed on the vertical accessory channel of a NetShelter rack using the mounting pegs. A total of four mounting pegs are located on the rear side of the unit, with two at the top edge and two at the bottom edge. These mounting pegs are compatible with most rack enclosure designs.

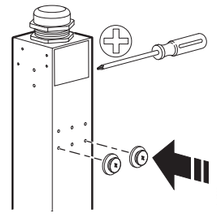

NOTE: The mounting pegs required for vertical installation is included as part of the accessories packaged with the Rack PDU.

The mounting pegs consist of a screw and washer. You can use a Phillips head screwdriver to change the location of the mounting pegs. There are multiple mounting points for attaching the pegs on the back and on the side. Choose the mounting location for the pegs according to your needs.

NOTE: The installation's receptacle/socket-outlet must have a Protective Earthing Connection. The plug on the power supply cord connects the Rack PDU's Protective Earthing Conductor to the installation's Protective Earthing Conductor.

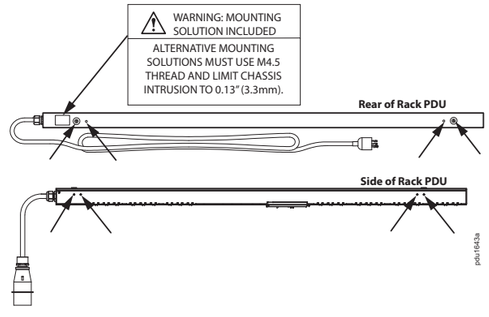

NOTE: The procedure below applies only to SKUs – APDU11550ME and APDU11551ME.

Two Rack PDUs can be installed on one vertical accessory channel in a NetShelter rack. Each PDU includes two mounting pegs, one at the top and one at the bottom.

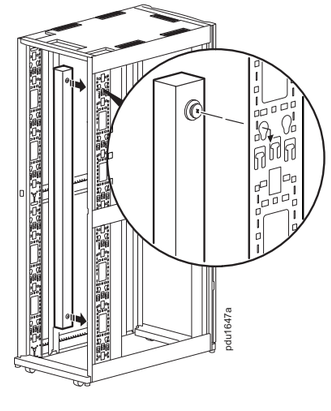

NOTE: The distance between mounting pegs varies by the Rack PDU model:

- Full-length Rack PDU: 1,555 mm (61.2 in)
- Mid-length Rack PDU: 1,244 mm (49.0 in)
- Half-length Rack PDU: 622 mm (24.5 in)

Power Cable

Route the power cable out of the rack and connect it to an appropriately rated branch circuit of your power source.

The Rack PDU should be connected to a dedicated branch circuit protected by an appropriately sized circuit breaker. Turn the power feed circuit breaker ON, only after the connection to the Rack PDU is complete.

When startup is complete, the Main Menu will appear on the display screen.

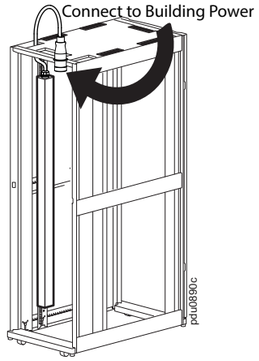

NOTICE

The power supply cord is heavy and may require significant force to insert the plug into the installation's receptacle or socket outlet. If the required force exceeds your capability, ask a colleague for assistance.

- Be sure the plug is fully inserted and securely locked into the receptacle. Locking occurs when the receptacle's spring-loaded cover engages with the plug's locking tab.
- For 100 A plugs, locking is complete when you fully screw the plug's locking ring onto the receptacle's locking tabs.

Quick Start Instructions

NOTE: See the **NetShelter Advanced 11000 Series 3-Phase High-Density Rack Power Distribution Units User Guide** available online at **www.se.com** for detailed instructions on configuring your settings.

NOTE: For security reasons, the username and password must be changed immediately after the first login.

The Display

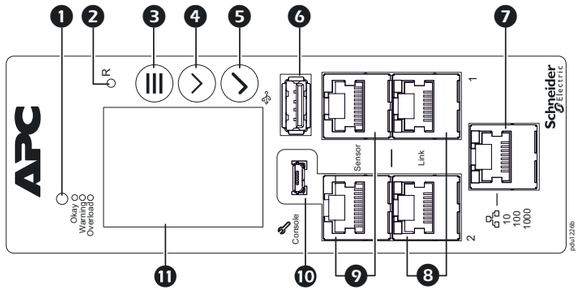

Item	Description	Function
❶	Load Indicator LED	Indicates the status of the Rack PDU load and alarm levels.
❷	Reset button	Resets the network management interface without affecting the outlets of the Rack PDU. To reset the network management interface without changing the configurations or the status of the outlets, press and release the button. To erase all configurations and restore the factory default settings, press and hold the button for 30 seconds, or until the Network Status LED blinks orange.
❸	Main Menu button	Press to return to the load status summary page.
❹	Scroll button	Press once to display the menu. Press additional times to move the highlight bar down the menu list until you reach the desired item.
❺	Select button	With a menu item highlighted, press the Select button to open the relevant status page.

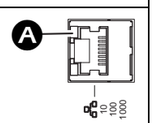

Item	Description	Function
❻	USB port 5 V @ 500 mA	For use with a flash drive to download log files, or to supply up to 100 mA at 5 V to hardware accessories. You can use this port to connect the Rack PDU to the cloud using a Wi-Fi dongle.
❼	10/100/1000 Base-T Connector (Network port)	Connects the Rack PDU to the network using a Cat5e+ network cable.
❽	Link 1 and Link 2 ports	For use with the Network Port Sharing (NPS) feature to connect multiple Rack PDUs to form an NPS group. This allows remote access to all devices within the group, provided at least one Rack PDU is connected to the network. These ports also support the power share feature.
❾	Sensor ports	Ports for connecting optional environment monitoring accessories: AP9335T, AP9335TH, NBES0301, NBES0302, NBES0303, NBES0304, NBES0305, or NBES0308. For more information about these accessories, see **www.se.com**.
❿	Console port	Connects the Rack PDU to a local computer using a micro-USB cable (APC part number 960–0603), to configure initial network settings or access the command line interface (CLI).
⓫	Display panel	Shows information about the Rack PDU. In an idle situation, the displayed information will refresh every 5 seconds. The screen will automatically turn off after 10 minutes of inactivity. To reverse the text, select **Display settings**, scroll to **LCD Orientation** and press **Select**.

Connecting to the Network

By default, the NetShelter Rack PDU Advanced uses DHCP to assign network settings, resulting in a dynamic IP address. If you need a static IP address, you can enter the TCP/IP settings manually at the Command Line Interface (CLI). Once network settings are assigned, you can access the Web User Interface (Web UI).

DHCP Connection (Dynamic IP Address)

1. Connect a network cable to the Network port. The network connection is established when the Network Status LED turns solid green.
2. Press the Scroll button to display the menu.
3. Press the Scroll button until **Network** is selected. Press the Select button to view the IPv4 address of the Web UI. (You can press the Scroll button again to display the IPv6 address of the Web UI.)
4. Take note of the IP address for access to the Web UI.

Manual Connection (Static IP Address)

1. Contact your network administrator to obtain the IP address, subnet mask, and default gateway for the Rack PDU.
2. Connect an Ethernet cable to the Network port on the Rack PDU.
3. Open an application to view the COM ports for the computer, according to the instructions for your operating system. (In Windows operating systems, you can view ports in the Device Manager.)
4. Connect a USB-A to USB Micro-B cable (not provided) to the console port on the Rack PDU and to your computer. A newly occupied serial COM port should appear in the port-viewing application. Take note of the port number or re-assign the port as needed.
5. Use a terminal program (for example, Tera Term®) to make a serial connection to the NetShelter Rack PDU Advanced. Configure the selected port for 9600 bps, 8 data bits, no parity, 1 stop bit, and no flow control.
6. The CLI opens. Press Enter, repeatedly if necessary, to display the user name prompt.
7. Log on to the CLI of the NetShelter Rack PDU Advanced. The default user name and password are both **apc**.
8. Change the default password when prompted. Use a strong password which conforms to your company's password requirements.
9. Use these three commands to configure the network settings (text in italics indicates a variable):
   `tcpip -i` *`your IP address`*
   `tcpip -s` *`your subnet mask`*
   `tcpip -g` *`your default gateway`*
10. Type `exit`, then press Enter. The Rack PDU restarts to apply the changes. The network connection is established when the Network Status LED turns solid green.

Web UI Access

After making a network connection with DHCP or manual settings, you can connect to the Web UI.

1. To access the Web UI, enter `https://`*`your IP address`* in your Web browser address field.

   When connecting to the Web UI, you may receive a message that the Web page is not secure. This is normal, and you can continue to the Web UI on other browsers. (If your Web browser does not offer the option to continue to the Web UI, try a different browser.) The "Certificate Error Message" is generated because your Web browser does not recognize the default certificate used for encryption over HTTPS. However, information transmitted over HTTPS is still encrypted. See the ***Security Handbook, Network Management Card 3*** for more information.
2. You will be prompted for a user name and password. If you have not already set the password, enter **apc** (the default) for both the user name and password to log on. Then change the default password as directed. Use a strong password which conforms to your company's password requirements.

See the **NetShelter Advanced 11000 Series 3-Phase High-Density Rack Power Distribution Units User Guide** available on **www.se.com** for more configuration options.

Connecting Multiple Rack PDUs with Network Port Sharing

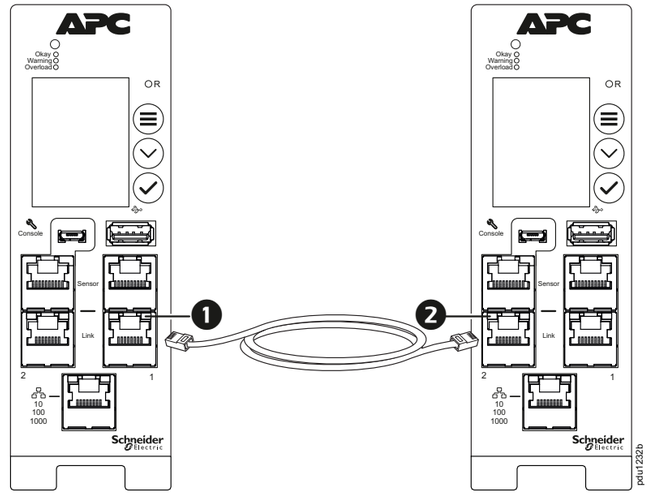

You can use Network Port Sharing (NPS) to connect up to 32 Rack PDUs with a single IP address. To optimize performance and ensure seamless functionality of the power share feature, avoid using a crossover cable.

To connect multiple Rack PDUs:

1. Configure the network settings for the first Rack PDU. This is the Host of the NPS group.
2. When the initial Rack PDU is configured, connect an Ethernet cable from the Link 1 port ❶ on the configured Rack PDU to the Link 2 port ❷ on the next Rack PDU. The second Rack PDU and all subsequent PDUs are Guests in the NPS group.
3. Repeat the previous step to connect more Rack PDUs.

NOTE: To reduce the possibility of communication issues, the maximum total length of cabling (Cat5e+) connecting Rack PDUs in a group should not exceed 10 m (32 ft).