Easy UPS 3L and Galaxy PX

Maintenance Bypass Cabinet for IEC

Installation

E3LMBP250K600H

Latest updates are available on the Schneider Electric website
9/2026



www.se.com

Legal Information

The information provided in this document contains general descriptions, technical characteristics and/or recommendations related to products/solutions.

This document is not intended as a substitute for a detailed study or operational and site-specific development or schematic plan. It is not to be used for determining suitability or reliability of the products/solutions for specific user applications. It is the duty of any such user to perform or have any professional expert of its choice (integrator, specifier or the like) perform the appropriate and comprehensive risk analysis, evaluation and testing of the products/solutions with respect to the relevant specific application or use thereof.

The Schneider Electric brand and any trademarks of Schneider Electric and its subsidiaries referred to in this document are the property of Schneider Electric or its subsidiaries. All other brands may be trademarks of their respective owner.

This document and its content are protected under applicable copyright laws and provided for informative use only. No part of this document may be reproduced or transmitted in any form or by any means (electronic, mechanical, photocopying, recording, or otherwise), for any purpose, without the prior written permission of Schneider Electric.

Schneider Electric does not grant any right or license for commercial use of the document or its content, except for a non-exclusive and personal license to consult it on an "as is" basis.

Electrical equipment should be installed, operated, serviced, and maintained only by qualified personnel. No responsibility is assumed by Schneider Electric for any consequences arising out of the use of this material.

Schneider Electric reserves the right to make changes or updates with respect to or in the content of this document or the format thereof, at any time without notice.

To the extent permitted by applicable law, no responsibility or liability is assumed by Schneider Electric and its subsidiaries for any errors or omissions in the informational content of this document, as well as any non-intended use or misuse of the content thereof.

Table of Contents

Table of Contents 3
Important Safety Instructions — SAVE THESE INSTRUCTIONS 5
- Safety Precautions 6
  - Additional Safety Precautions After Installation 8
  - Additional Safety Precautions for Tall, Thin, and Heavy Products 8
- Electrical Safety 8

Specifications 10
- Internal Switch Specifications 10
- Maximum Short Circuit Rating 10
- Required Upstream Protection 10
- Recommended Cable Sizes 10
- Recommended Bolt and Lug Sizes 11
- Torque Specifications 11
- Maintenance Bypass Cabinet Weight and Dimensions 11
- Maintenance Bypass Cabinet Shipping Weight and Dimensions 12
- Clearance 12
- Environment 13
- Compliance 13
- System Overview 14

Installation Procedure 15
Prepare the Maintenance Bypass Cabinet for Installation 18
Connect the Power Cables in the Maintenance Bypass Cabinet 22
Prepare the Maintenance Bypass Cabinet and the UPS for Signal Cables 24
Connect the Signal Cables Between the Maintenance Bypass Cabinet and the Easy 3L UPS 28
Connect the Signal Cables Between the Maintenance Bypass Cabinet and the Galaxy PX UPS 30
Final Installation 32
Decommission or Move the Maintenance Bypass Cabinet to a New Location 33

Important Safety Instructions — SAVE THESE INSTRUCTIONS

Read these instructions carefully and look at the equipment to become familiar with it before trying to install, operate, service or maintain it. The following safety messages may appear throughout this manual or on the equipment to warn of potential hazards or to call attention to information that clarifies or simplifies a procedure.



The addition of this symbol to a “Danger” or “Warning” safety message indicates that an electrical hazard exists which will result in personal injury if the instructions are not followed.



This is the safety alert symbol. It is used to alert you to potential personal injury hazards. Obey all safety messages with this symbol to avoid possible injury or death.

⚠ DANGER

DANGER indicates a hazardous situation which, if not avoided, **will result in** death or serious injury.

Failure to follow these instructions will result in death or serious injury.

⚠ WARNING

WARNING indicates a hazardous situation which, if not avoided, **could result in** death or serious injury.

Failure to follow these instructions can result in death, serious injury, or equipment damage.

⚠ CAUTION

CAUTION indicates a hazardous situation which, if not avoided, **could result in** minor or moderate injury.

Failure to follow these instructions can result in injury or equipment damage.

NOTICE

NOTICE is used to address practices not related to physical injury. The safety alert symbol shall not be used with this type of safety message.

Failure to follow these instructions can result in equipment damage.

Please Note

Electrical equipment should only be installed, operated, serviced, and maintained by qualified personnel. No responsibility is assumed by Schneider Electric for any consequences arising out of the use of this material.

A qualified person is one who has skills and knowledge related to the construction, installation, and operation of electrical equipment and has received safety training to recognize and avoid the hazards involved.

Per IEC 62040-1: "Uninterruptible power systems (UPS) -- Part 1: Safety Requirements," this equipment, including battery access, must be inspected, installed and maintained by a skilled person.

The skilled person is a person with relevant education and experience to enable him or her to perceive risks and to avoid hazards which the equipment can create (reference IEC 62040-1, section 3.102).

Safety Precautions

⚠⚠DANGER

HAZARD OF ELECTRIC SHOCK, EXPLOSION, OR ARC FLASH

Read all instructions in the installation manual before installing or working on this product.

Failure to follow these instructions will result in death or serious injury.

⚠⚠DANGER

HAZARD OF ELECTRIC SHOCK, EXPLOSION, OR ARC FLASH

Do not install the product until all construction work has been completed and the installation room has been cleaned.

Failure to follow these instructions will result in death or serious injury.

⚠⚠DANGER

HAZARD OF ELECTRIC SHOCK, EXPLOSION, OR ARC FLASH

The product must be installed according to the specifications and requirements as defined by Schneider Electric. It concerns in particular the external and internal protections (upstream disconnect devices, battery disconnect devices, cabling, etc.) and environmental requirements. No responsibility is assumed by Schneider Electric if these requirements are not respected.

Failure to follow these instructions will result in death or serious injury.

⚠⚠DANGER

HAZARD OF ELECTRIC SHOCK, EXPLOSION, OR ARC FLASH

The UPS system must be installed according to local and national regulations. Install the UPS system according to:

- IEC 60364 (including 60364-4-41 – protection against electric shock, 60364-4-42 – protection against thermal effect, and 60364-4-43 – protection against overcurrent), **or**
- NEC NFPA 70, **or**
- Canadian Electrical Code (C22.1, Part 1)

depending on which one of the standards apply in your local area.

Failure to follow these instructions will result in death or serious injury.

⚠⚠DANGER

HAZARD OF ELECTRIC SHOCK, EXPLOSION, OR ARC FLASH

- Install the product in a temperature controlled indoor environment free of conductive contaminants and humidity.
- Install the product on a non-flammable, level and solid surface (e.g. concrete) that can support the weight of the system.

Failure to follow these instructions will result in death or serious injury.

⚠⚠DANGER

HAZARD OF ELECTRIC SHOCK, EXPLOSION, OR ARC FLASH

The product is not designed for and must therefore not be installed in the following unusual operating environments:

- Damaging fumes
- Explosive mixtures of dust or gases, corrosive gases, or conductive or radiant heat from other sources
- Moisture, abrasive dust, steam or in an excessively damp environment
- Fungus, insects, vermin
- Salt-laden air or contaminated cooling refrigerant
- Pollution degree higher than 2 according to IEC 60664-1
- Exposure to abnormal vibrations, shocks, and tilting
- Exposure to direct sunlight, heat sources, or strong electromagnetic fields

Failure to follow these instructions will result in death or serious injury.

⚠⚠DANGER

HAZARD OF ELECTRIC SHOCK, EXPLOSION, OR ARC FLASH

Do not drill or cut holes for cables or conduits with the gland plates installed and do not drill or cut holes in close proximity to the UPS system.

Failure to follow these instructions will result in death or serious injury.

⚠⚠DANGER

HAZARD OF ELECTRIC SHOCK, EXPLOSION, OR ARC FLASH

Do not make mechanical changes to the product (including removal of cabinet parts or drilling/cutting of holes) that are not described in the installation manual.

Failure to follow these instructions will result in death or serious injury.

NOTICE

RISK OF OVERHEATING

Respect the space requirements around the product and do not cover the ventilation openings when the product is in operation.

Failure to follow these instructions can result in equipment damage.

Additional Safety Precautions After Installation

⚠⚠DANGER

HAZARD OF ELECTRIC SHOCK, EXPLOSION, OR ARC FLASH

Do not install the UPS system until all construction work has been completed and the installation room has been cleaned. If additional construction work is needed in the installation room after this product has been installed, turn off the product and cover the product with the protective packaging bag the product was delivered in.

Failure to follow these instructions will result in death or serious injury.

Additional Safety Precautions for Tall, Thin, and Heavy Products





These symbols indicate a risk of tip-over and potential crushing injury. When displayed on a product or package, they warn that the item may become unstable due to a high center of gravity, uneven weight distribution, or overall heaviness. Exercise caution when handling or moving the product. Always read and follow any specific handling instructions provided, and consider using professional movers if necessary to ensure safe transport, installation, and decommissioning.

Electrical Safety

This manual contains important safety instructions that should be followed during the installation and maintenance of the UPS system.

⚠⚠DANGER

HAZARD OF ELECTRIC SHOCK, EXPLOSION, OR ARC FLASH

- Electrical equipment must be installed, operated, serviced, and maintained only by qualified personnel.
- Apply appropriate personal protective equipment (PPE) and follow safe electrical work practices.
- Disconnection devices for AC and DC must be provided by others, be readily accessible, and the function of the disconnect device marked for its function.
- Turn off all power supplying the UPS system before working on or inside the equipment.
- Before working on the UPS system, check for hazardous voltage between all terminals including the protective earth.
- The UPS contains an internal energy source. Hazardous voltage can be present even when disconnected from the mains supply. Before installing or servicing the UPS system, ensure that the units are OFF and that mains and batteries are disconnected. Wait five minutes before opening the UPS to allow the capacitors to discharge.
- The UPS must be properly earthed/grounded and due to a high leakage current, the earthing/grounding conductor must be connected first.

Failure to follow these instructions will result in death or serious injury.

The label below must be added if:

1. The UPS input is connected through external isolators that, when opened, isolate the neutral, OR

2. The UPS input is connected via an IT power system.

The label must be placed adjacent to all upstream power disconnection devices that isolate the neutral.

⚠⚠DANGER

HAZARD OF ELECTRIC SHOCK, EXPLOSION, OR ARC FLASH

Risk of voltage backfeed. Before working on this circuit: Isolate the UPS and check for hazardous voltage between all terminals including the protective earth.

Failure to follow these instructions will result in death or serious injury.

Specifications

Internal Switch Specifications

Disconnect device type	C125S4NAFM NS1250NA 4P 1250A FXD Man. NA
Auxiliary contact	PA29450 Indication Contacts OF,SD,SDE6A - 240V

Maximum Short Circuit Rating

The maximum short circuit rating for the maintenance bypass cabinet is Icc=35 kA conditioned by installation of the upstream protection breaker listed in the UPS installation manual.

Required Upstream Protection

Refer to the UPS installation manual for recommended upstream protection.

Recommended Cable Sizes

⚠⚠DANGER

HAZARD OF ELECTRIC SHOCK, EXPLOSION, OR ARC FLASH

All wiring must comply with all applicable national and/or electrical codes. The maximum allowable cable size is 240 mm^2.

Failure to follow these instructions will result in death or serious injury.

When connecting the Easy UPS 3L to the maintenance bypass cabinet, refer to the UPS installation manual for recommended cable sizes.

When connecting the Galaxy PX 300 – 400 kW UPS to the maintenance bypass cabinet, refer to the UPS installation manual for recommended cable sizes.

When connecting the Galaxy PX 500 – 600 kW UPS to the maintenance bypass cabinet, refer to table Recommended Cable Sizes for Galaxy PX 500 kW UPS, page 10 and table Recommended Cable Sizes for Galaxy PX 600 kW UPS, page 10 for recommended cable sizes.

Recommended Cable Sizes for Galaxy PX 500 kW UPS

	Cable size per phase (mm^2)	Neutral cable size (mm^2)	PE cable size (mm^2)
Input	3 x 240	3 x 240	2 x 120
Bypass	3 x 240	3 x 240	2 x 120
Output	3 x 240	3 x 240	2 x 120

Recommended Cable Sizes for Galaxy PX 600 kW UPS

	Cable size per phase (mm^2)	Neutral cable size (mm^2)	PE cable size (mm^2)
Input	3 x 240	3 x 240	2 x 185

Recommended Cable Sizes for Galaxy PX 600 kW UPS (Continued)

Bypass	3 x 240	3 x 240	2 x 150
Output	3 x 240	3 x 240	2 x 150

Recommended Bolt and Lug Sizes

When connecting the Easy UPS 3L to the maintenance bypass cabinet, refer to table Recommended Bolt and Lug Sizes for Easy UPS 3L — Copper, page 11 for recommended bolt and lug sizes.

When connecting the Galaxy PX 300 – 600 kW UPS to the maintenance bypass cabinet, follow the specifications in table Recommended Bolt and Lug Sizes for Galaxy PX 300 – 600 kW — Copper, page 11 for one cable end and those in table Recommended Bolt and Lug Sizes for Easy UPS 3L — Copper, page 11 for the other end.

Recommended Bolt and Lug Sizes for Galaxy PX 300 – 600 kW — Copper

Cable size (mm²)	Bolt size	Cable lug type
120	M10 x 40 mm	TLK 120-10
150	M10 x 40 mm	TLK 150-10
185	M10 x 40 mm	TLK 185-10
240	M10 x 40 mm	TLK 240-10

Recommended Bolt and Lug Sizes for Easy UPS 3L — Copper

Cable Size (mm²)	Bolt Size	Cable Lug Type
120	M12 x 35 mm	TLK 120-12
150	M12 x 35 mm	TLK 150-12
185	M12 x 35 mm	TLK 185-12
240	M12 x 35 mm	TLK 240-12

Torque Specifications

Bolt size	Torque
M3	0.7 Nm
M4	1.2 Nm
M5	2.3 Nm
M6	4.5 Nm
M8	15 Nm
M10	28 Nm
M12	50 Nm

Maintenance Bypass Cabinet Weight and Dimensions

Commercial reference	Weight kg	Height mm	Width mm	Depth mm
E3LMBP250K600H	227	1970	500	850

Maintenance Bypass Cabinet Shipping Weight and Dimensions

Commercial reference	Weight kg	Height mm	Width mm	Depth mm
E3LMBP250K600H	267	2150	950	990

Clearance

NOTE: Clearance dimensions are published for airflow and service access only. Consult with the local safety codes and standards for additional requirements in your local area.

NOTE: The maintenance bypass cabinet can be installed remotely to the UPS. It illustrates the procedures of installing the maintenance bypass cabinet to the right of the UPS in this manual as an example.

Front View of the UPS and the Maintenance Bypass Cabinet

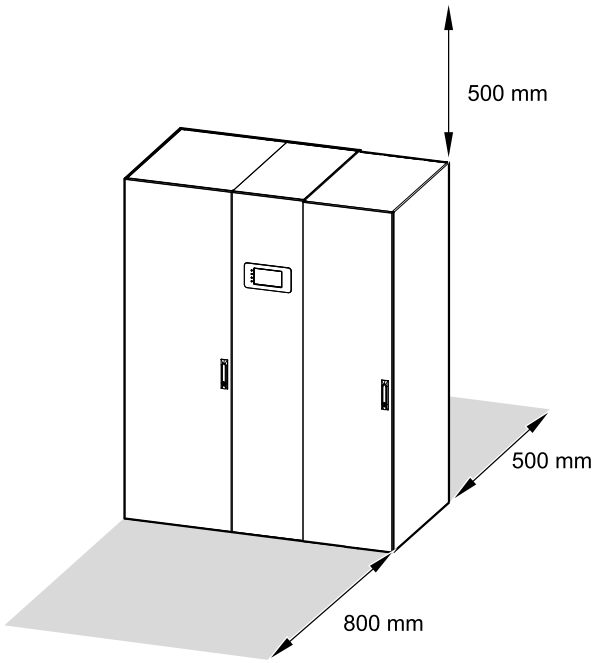

Environment

	Operating	Storage
Temperature	0 °C to 30 °C (at power factor = 1) 30 °C to 40 °C (at power factor = 0.9)	-25 °C to 55 °C
Relative humidity	0-95% non-condensing	
Protection class	IP20	
Color	RAL 9003, gloss level 85%	

Compliance

Safety	IEC 62040-1:2017, Edition 2.0, Uninterruptible power systems (UPS) – Part 1: Safety requirements
Transportation	ISTA 2B
Pollution degree	2
Overvoltage category	III
Earthing system (1)	TN-S, TN-C, TT, or IT

(1) Refer to the UPS earthing principles for earthing requirements of the system.

System Overview

UIB	Unit input disconnect device
SSIB	Static switch input disconnect device
MBB	Maintenance bypass disconnect device
UOB	Unit output disconnect device

NOTE: In Schneider Electric literature, 'disconnect device' is used as a generic term covering circuit breakers or switches as their position may vary depending on configuration. Details about the individual configuration are found in the electrical diagram and/or by reading the symbol on the front of each disconnect device.

Single Mains UPS System

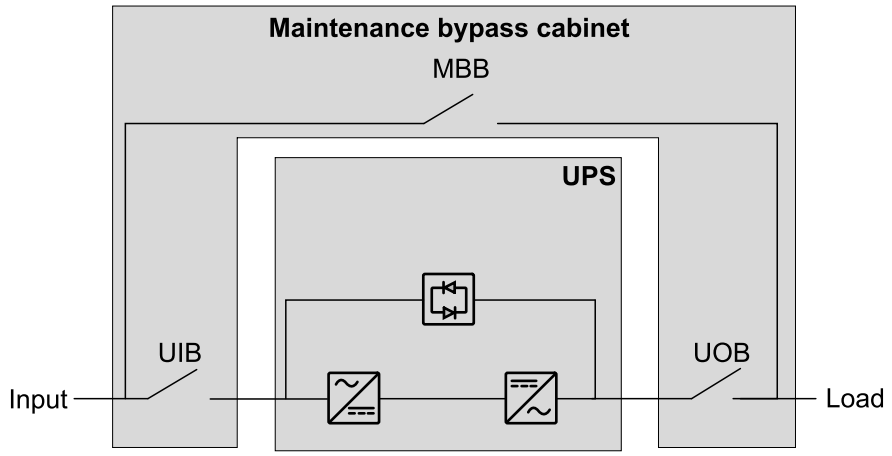

Dual Mains UPS System

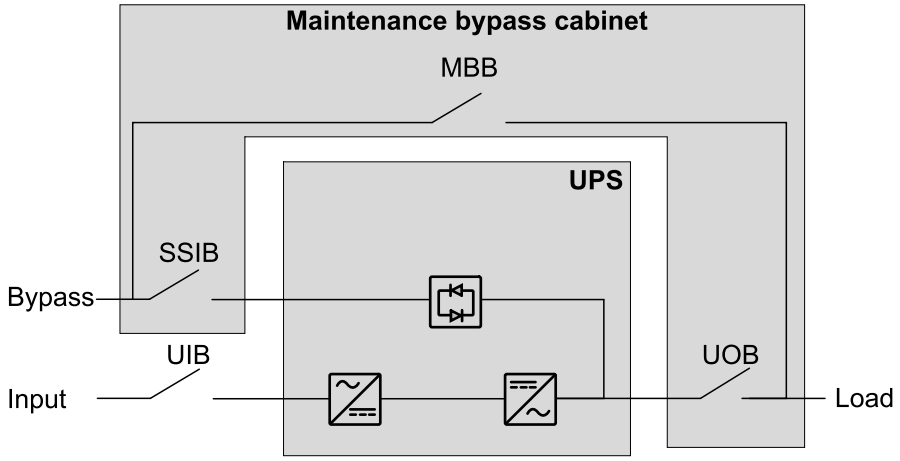

Installation Procedure

Signal cable
Power cable

Single Mains – Top Cable Entry

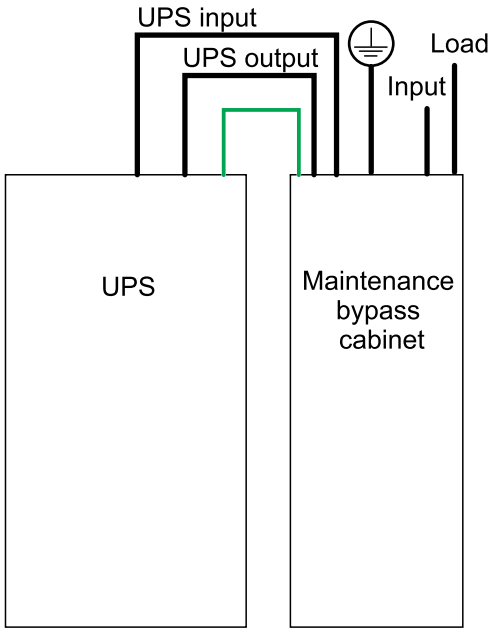

Dual Mains – Top Cable Entry

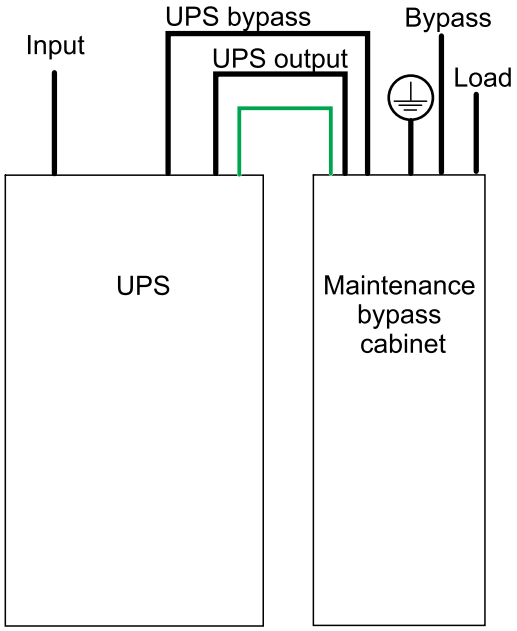

Single Mains – Bottom Cable Entry

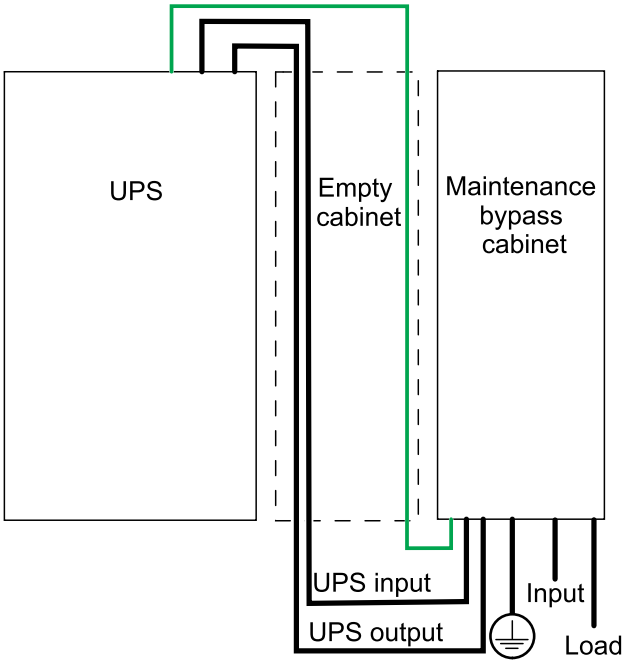

Dual Mains – Bottom Cable Entry

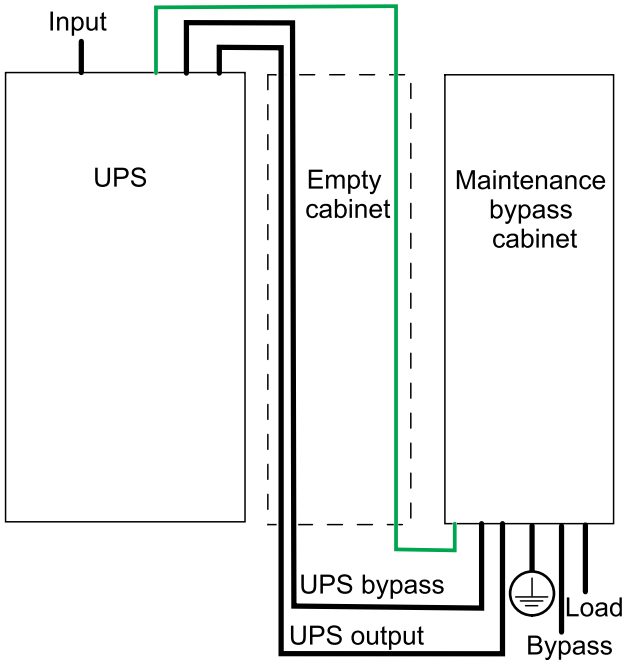

NOTE: An empty cabinet should be used to route the cables in bottom cable entry system.

Single Mains – Top and Bottom Cable Entry

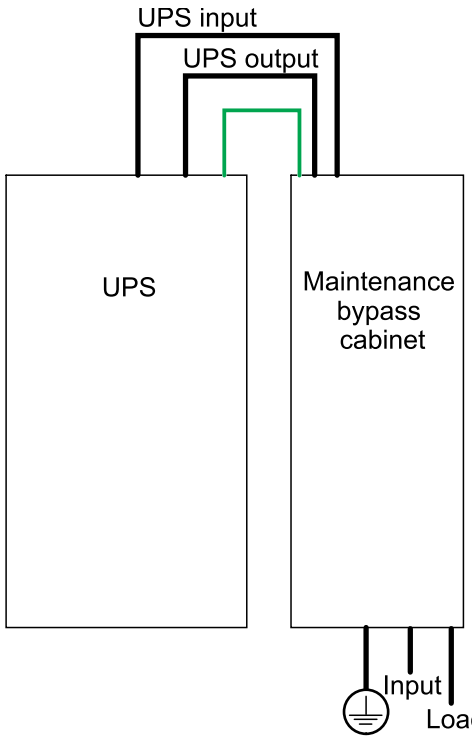

Dual Mains – Top and Bottom Cable Entry

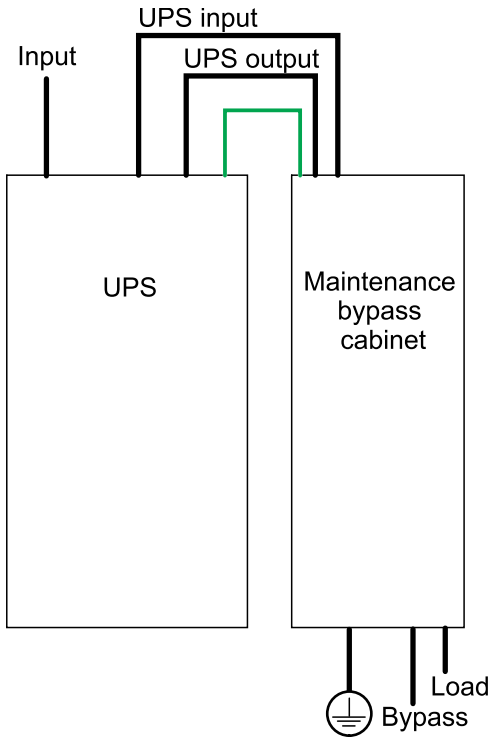

1. Prepare the Maintenance Bypass Cabinet for Installation, page 18.
2. Connect the Power Cables in the Maintenance Bypass Cabinet, page 22.
3. Place UPS in final position on the right side of the MBC - either as adjacent or with gap between the cabinets. Follow the UPS installation manual to prepare the UPS for installation.

4. Route the power cables out of the maintenance bypass cabinet. Connect power cables in the UPS - follow UPS installation manual to connect the power cables.
5. Prepare the Maintenance Bypass Cabinet and the UPS for Signal Cables, page 24.
6. Perform one of the following:
   - Connect the Signal Cables Between the Maintenance Bypass Cabinet and the Easy 3L UPS, page 28, or
   - Connect the Signal Cables Between the Maintenance Bypass Cabinet and the Galaxy PX UPS, page 30.
7. Follow the UPS installation manual and other auxiliary product installation manuals to connect relevant signal cables and external communication cables in the UPS.
8. Final Installation, page 32.
9. Follow the UPS installation manual to finalize the installation of the UPS.

For moving or decommissioning the maintenance bypass cabinet after installation has been completed, please see Decommission or Move the Maintenance Bypass Cabinet to a New Location, page 33.

Prepare the Maintenance Bypass Cabinet for Installation

1. Place the maintenance bypass cabinet in the final position.
2. Remove the rear panel from the maintenance bypass cabinet. For easier access: Remove the right/left side panel(s) (optional).

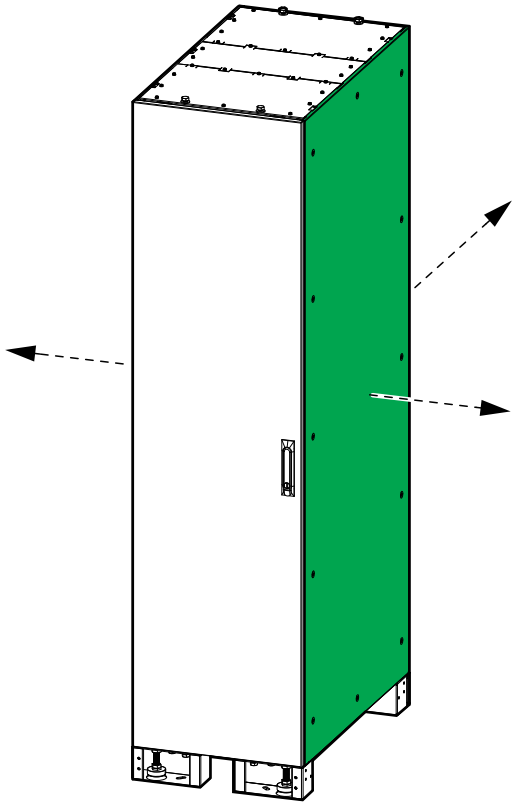

3. Move the maintenance bypass cabinet into final position with a forklift. Lower the front and rear feet on the maintenance bypass cabinet with a wrench until they connect with the floor. Use a bubble-leveler to check that the maintenance bypass cabinet is level. Install the four M10 screws in the maintenance bypass cabinet to mount it to the floor.

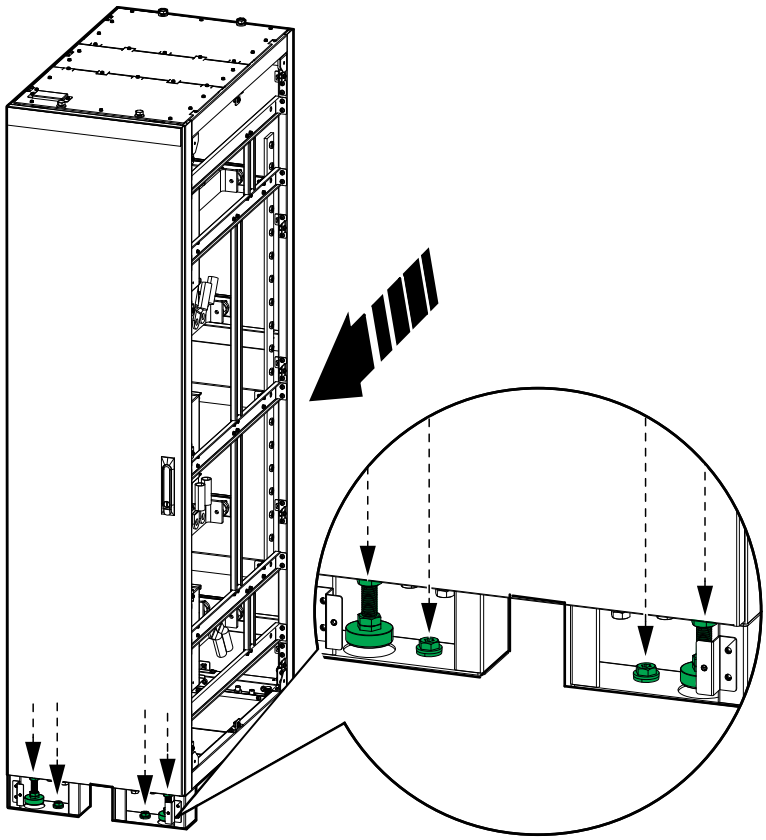

4. Perform one of the following:
   – **Top cable entry:** Remove the top gland plates. Drill or punch holes for power cables or grommets (not provided) in the gland plates. Install grommets, if required.

Front View of the Maintenance Bypass Cabinet

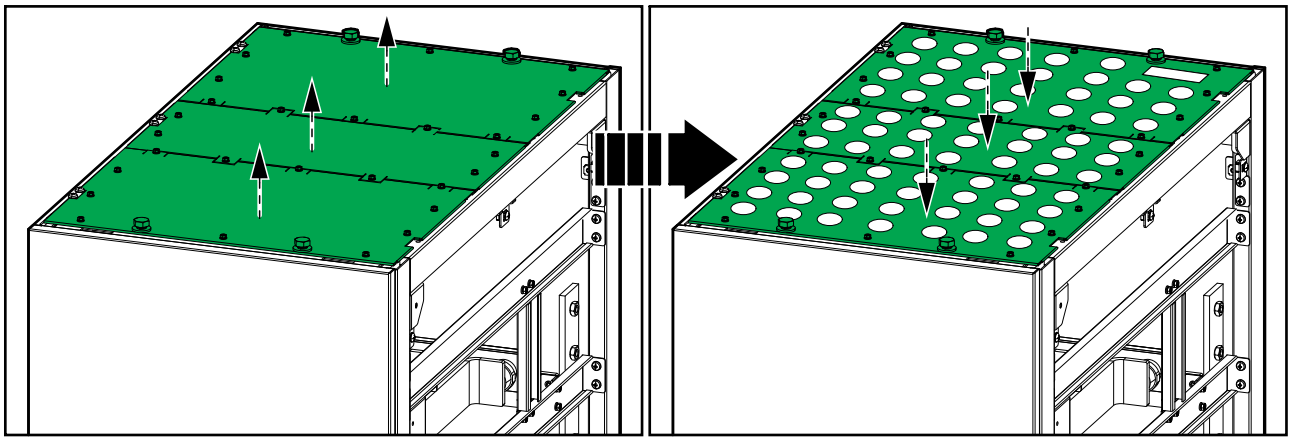

⚠⚠DANGER

HAZARD OF ELECTRIC SHOCK, EXPLOSION, OR ARC FLASH

Do not drill or punch holes with the gland plates installed and do not drill or punch holes in close proximity to the cabinet.

Failure to follow these instructions will result in death or serious injury.

Top View of the Maintenance Bypass Cabinet

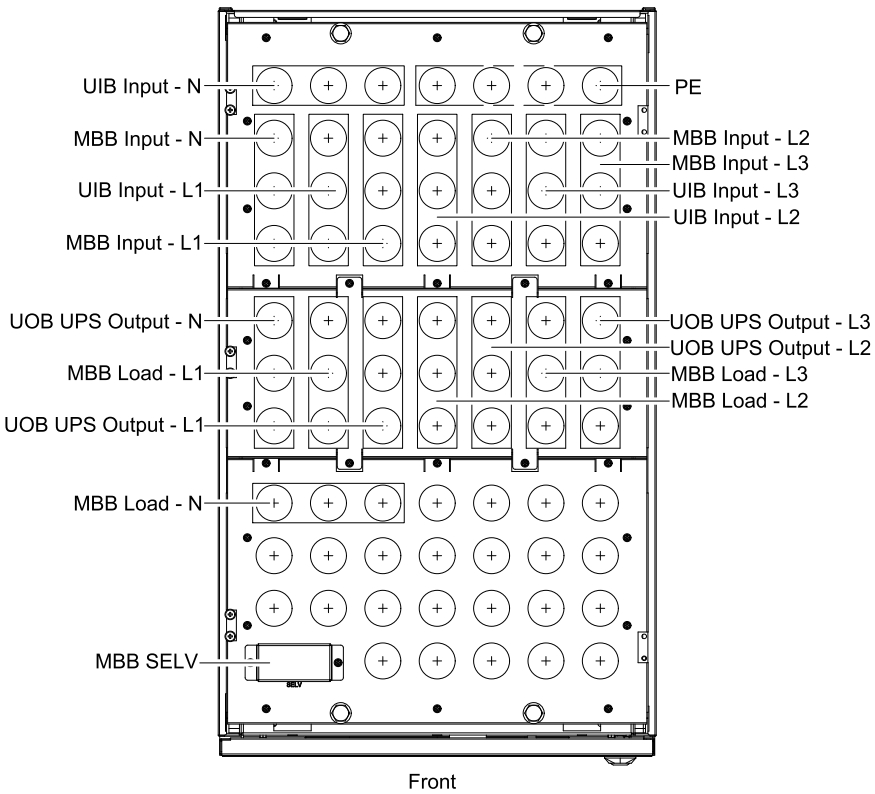

– **Bottom cable entry:** Remove the bottom gland plates. Drill or punch holes for power cables or grommets (not provided) in the gland plate. Install grommets, if required.

Bottom Cable Entry

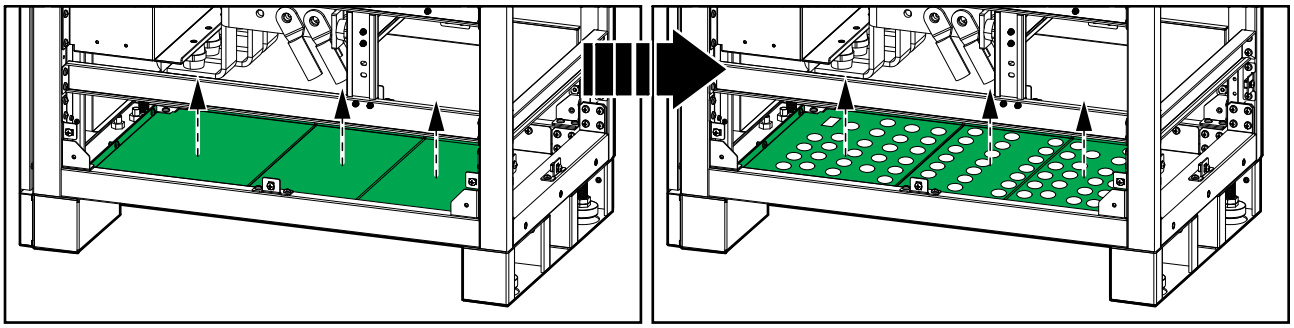

⚠⚠DANGER

HAZARD OF ELECTRIC SHOCK, EXPLOSION, OR ARC FLASH

Do not drill or punch holes with the gland plates installed and do not drill or punch holes in close proximity to the cabinet.

Failure to follow these instructions will result in death or serious injury.

Bottom View of the Maintenance Bypass Cabinet

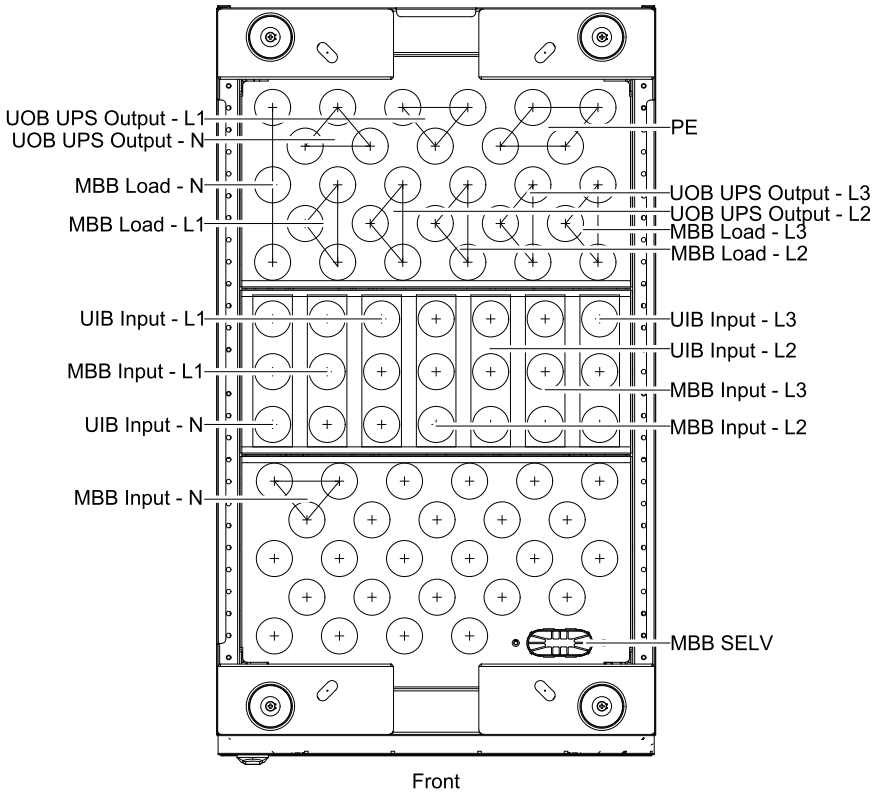

5. Reinstall the top or bottom gland plates.

Connect the Power Cables in the Maintenance Bypass Cabinet

1. Route the power cables through the top or bottom of the maintenance bypass cabinet.
2. Connect the PE cables.
3. Connect the input cables/bypass cables, UPS input cables/UPS bypass cables, load cables, and UPS output cables.

Single Mains – Rear View

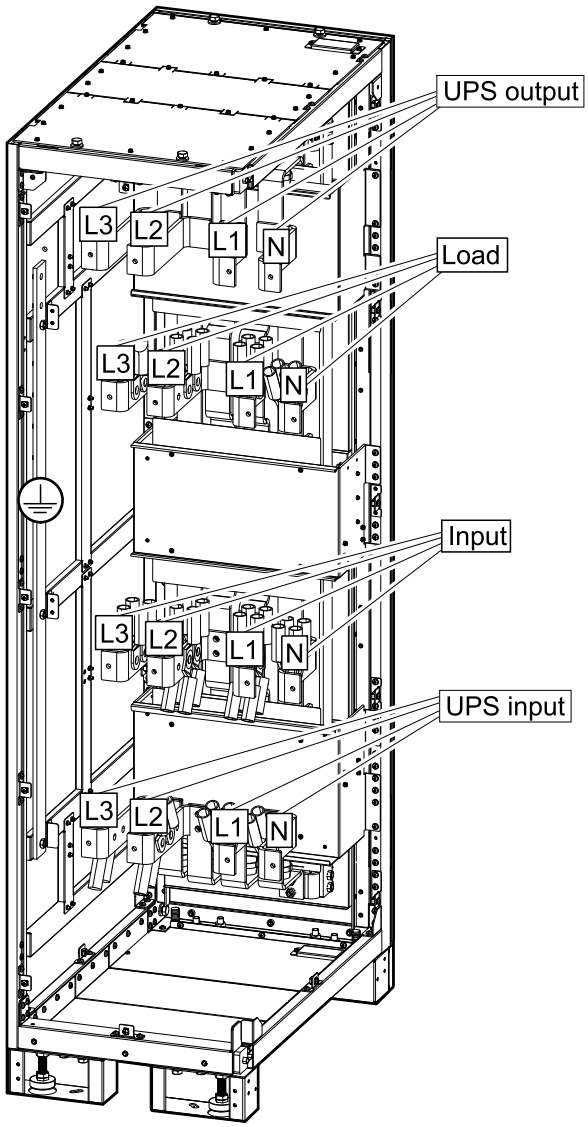

Dual Mains – Rear View

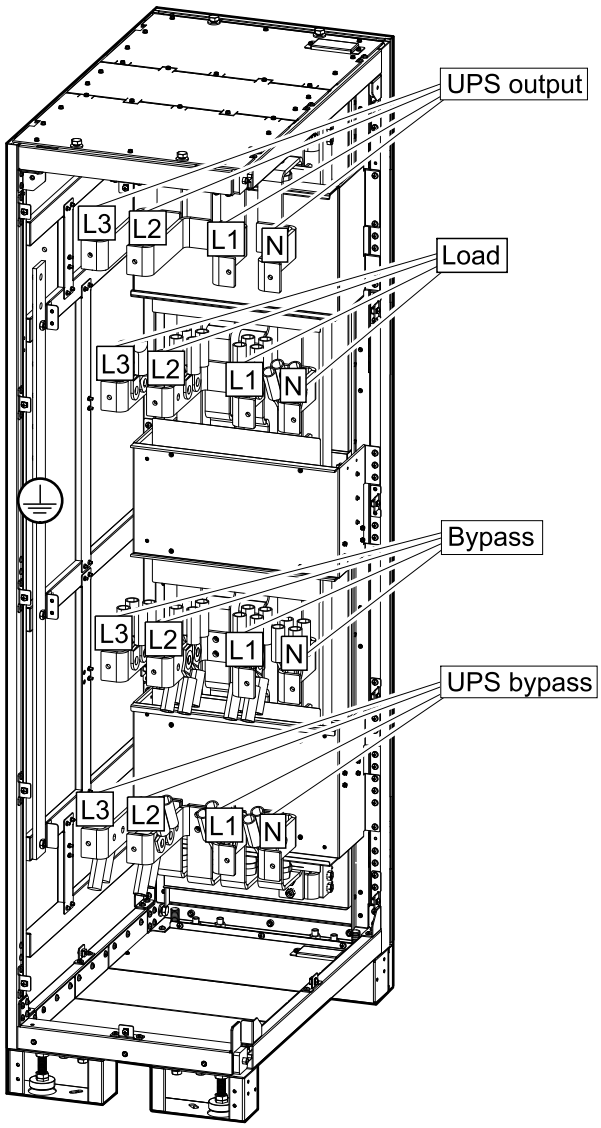

NOTE: If there is no room available for removing the right side panel from the maintenance bypass cabinet, follow the installation sequence on the label on the maintenance bypass cabinet to connect the input cables/ bypass cables, UPS input cables/UPS bypass cables, load cables, and UPS output cables.

Top Entry:

UOB UPS Output-L3 → UOB UPS Output-L2 → UOB UPS Output-L1 → UOB UPS Output-N

MBB Load-L3 → MBB Load-L2 → MBB Load-L1 → MBB Load-N

MBB Input-L3 → MBB Input-L2 → MBB Input-L1 → MBB Input-N

UIB Input-L3 → UIB Input-L2 → UIB Input-L1 → UIB Input-N → PE

Bottom Entry:

UIB Input-L3 → UIB Input-L2 → UIB Input-L1 → UIB Input-N

MBB Input-L3 → MBB Input-L2 → MBB Input-L1 → MBB Input-N

MBB Load-L3 → MBB Load-L2 → MBB Load-L1 → MBB Load-N

UOB UPS Output-L3 → UOB UPS Output-L2 → UOB UPS Output-L1 → UOB UPS Output-N → PE

4. Check the fastening of the cable lugs.

⚠CAUTION

RISK OF EQUIPMENT DAMAGE

Check the fastening of the cable lugs. If the cable lugs move due to pulling on the cables, the bolt can become loose.

Failure to follow these instructions can result in injury or equipment damage.

5. **Only for single mains system**: Route the UPS input cables and the UPS output cables through the top of the maintenance bypass and into the UPS. Follow the UPS installation manual to connect the UPS input cables and the UPS output cables in the UPS.
6. **Only for dual mains system**: Route the UPS bypass cables and the UPS output cables through the top of the maintenance bypass cabinet and into the UPS. Route the input cables directly into the UPS. Follow the UPS installation manual to connect the input cables, the UPS bypass cables and the UPS output cables in the UPS.
7. Clean/vacuum the maintenance bypass cabinet of any debris and foreign objects.

Prepare the Maintenance Bypass Cabinet and the UPS for Signal Cables

1. Remove the signal cable cover from the UPS. Open the front door of the maintenance bypass cabinet and remove the three front panels from the maintenance bypass cabinet.

Front View of the UPS and Maintenance Bypass Cabinet

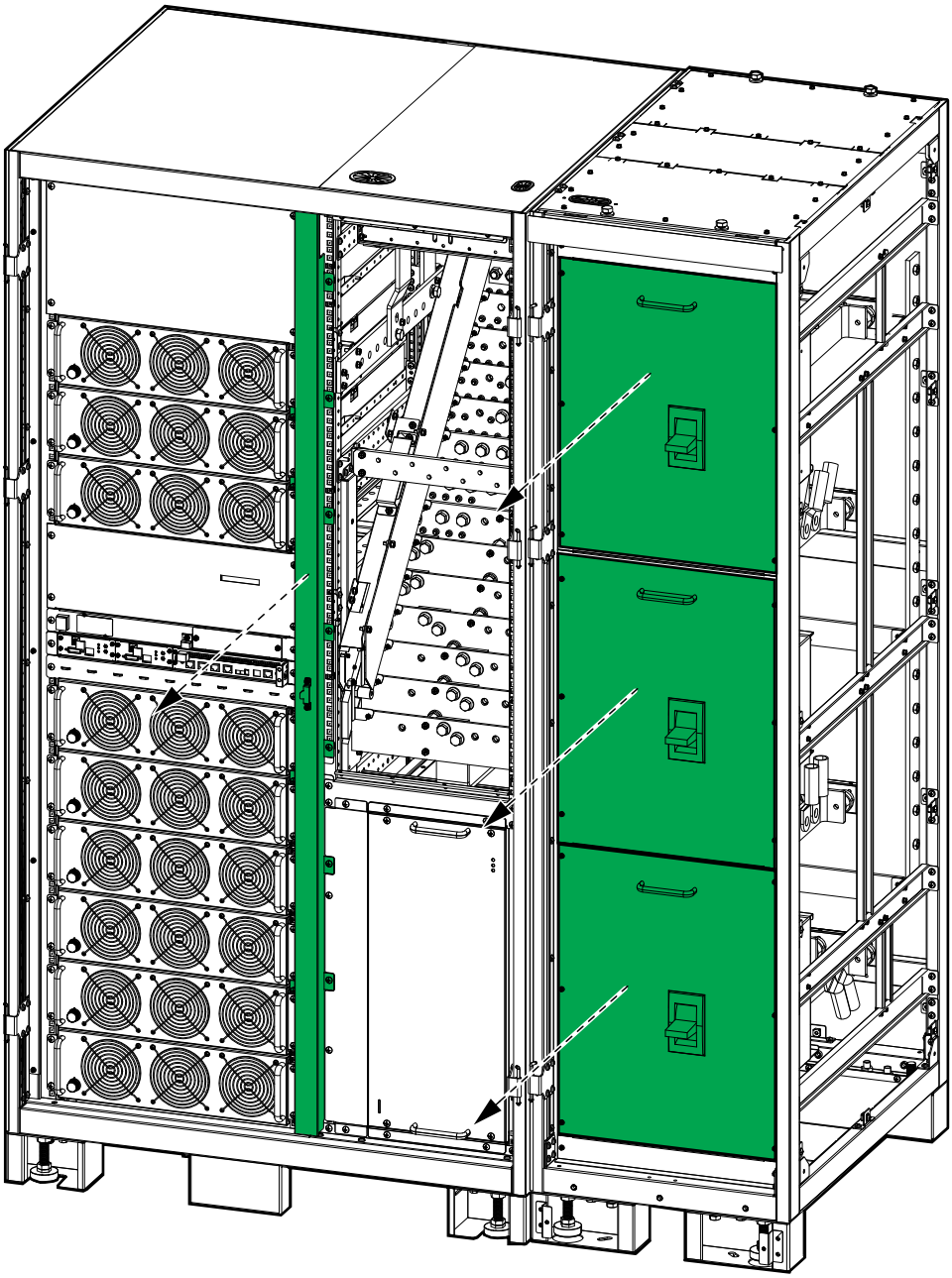

2. Remove the protection cover over the non-Class 2/non-SELV terminals.

Front View of the UPS

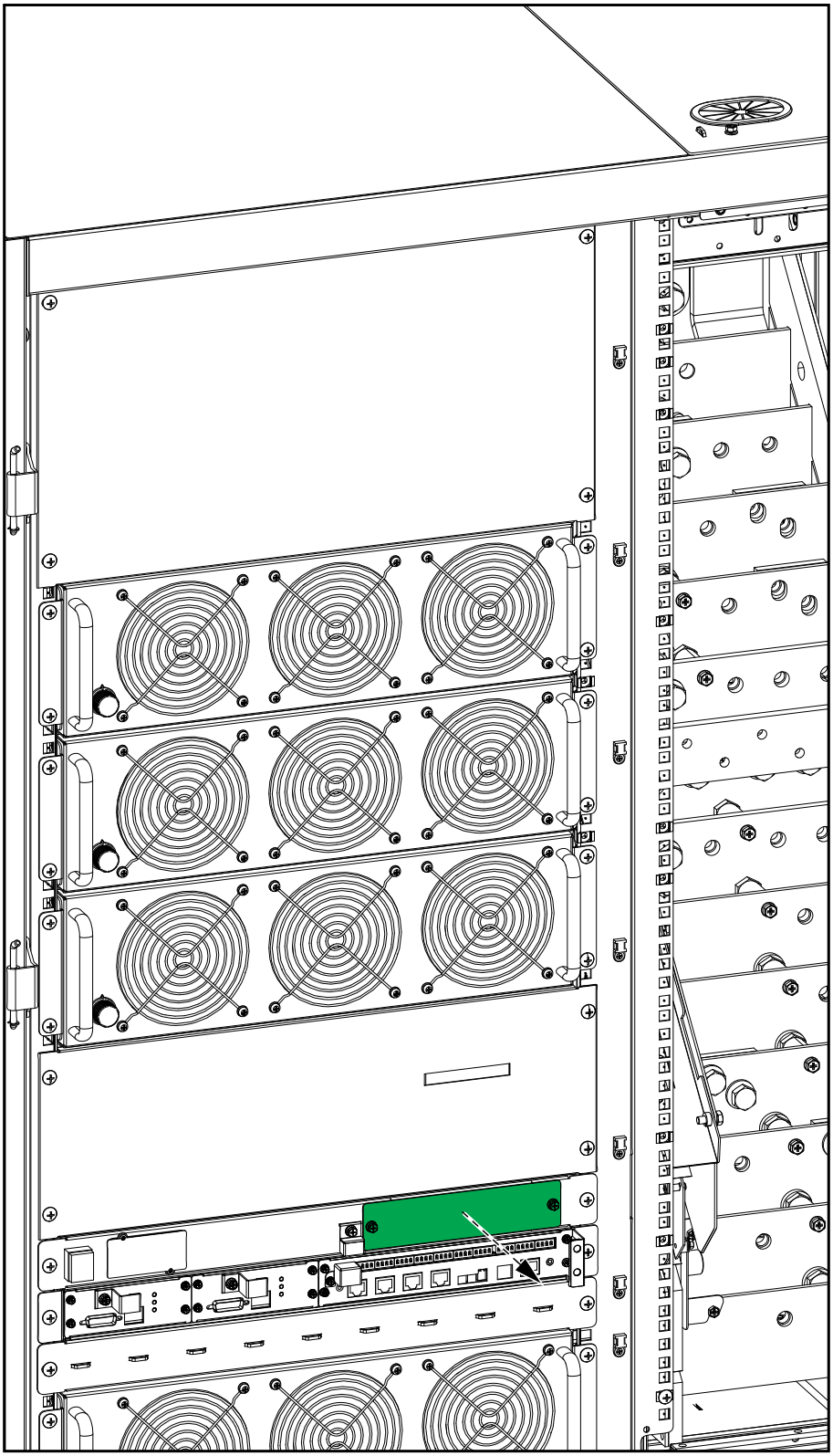

3. **Only for top cable entry:** Route the non-Class 2/non-SELV signal cables through the top opening of the maintenance bypass cabinet and down to the non-Class 2/non-SELV terminals in the UPS as shown.

Front View of the UPS and Maintenance Bypass Cabinet

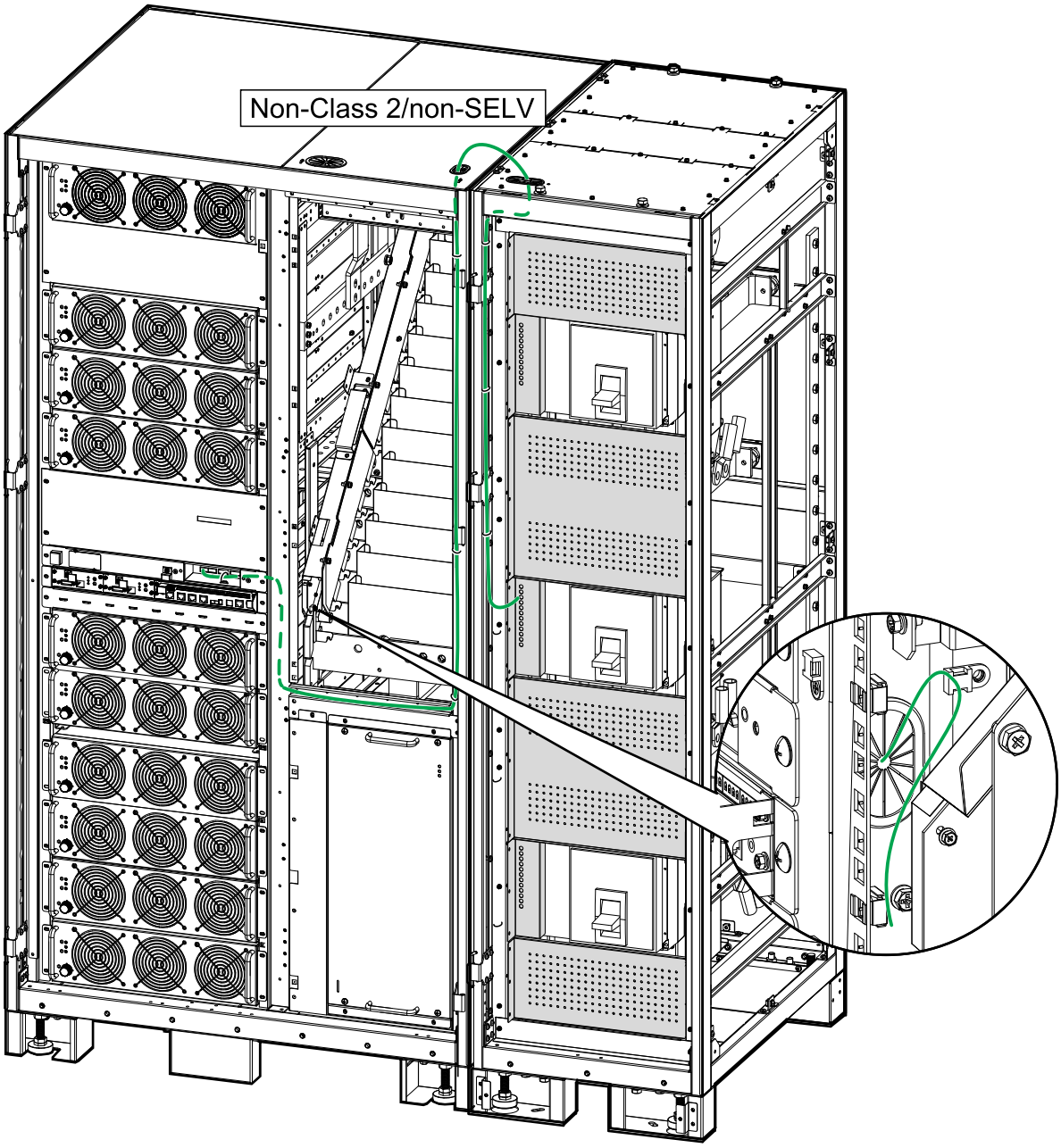

NOTE: The illustration uses Easy UPS 3L as an example. Signal cable routing for Galaxy PX 300–600 kW UPS is similar. Refer to the Galaxy PX 300–600 kW UPS installation manual for details.

4. **Only for bottom cable entry:** Route the non-Class 2/non-SELV signal cables through the bottom opening and up to the non-Class 2/non-SELV terminals as shown.

Front View of the UPS and Maintenance Bypass Cabinet

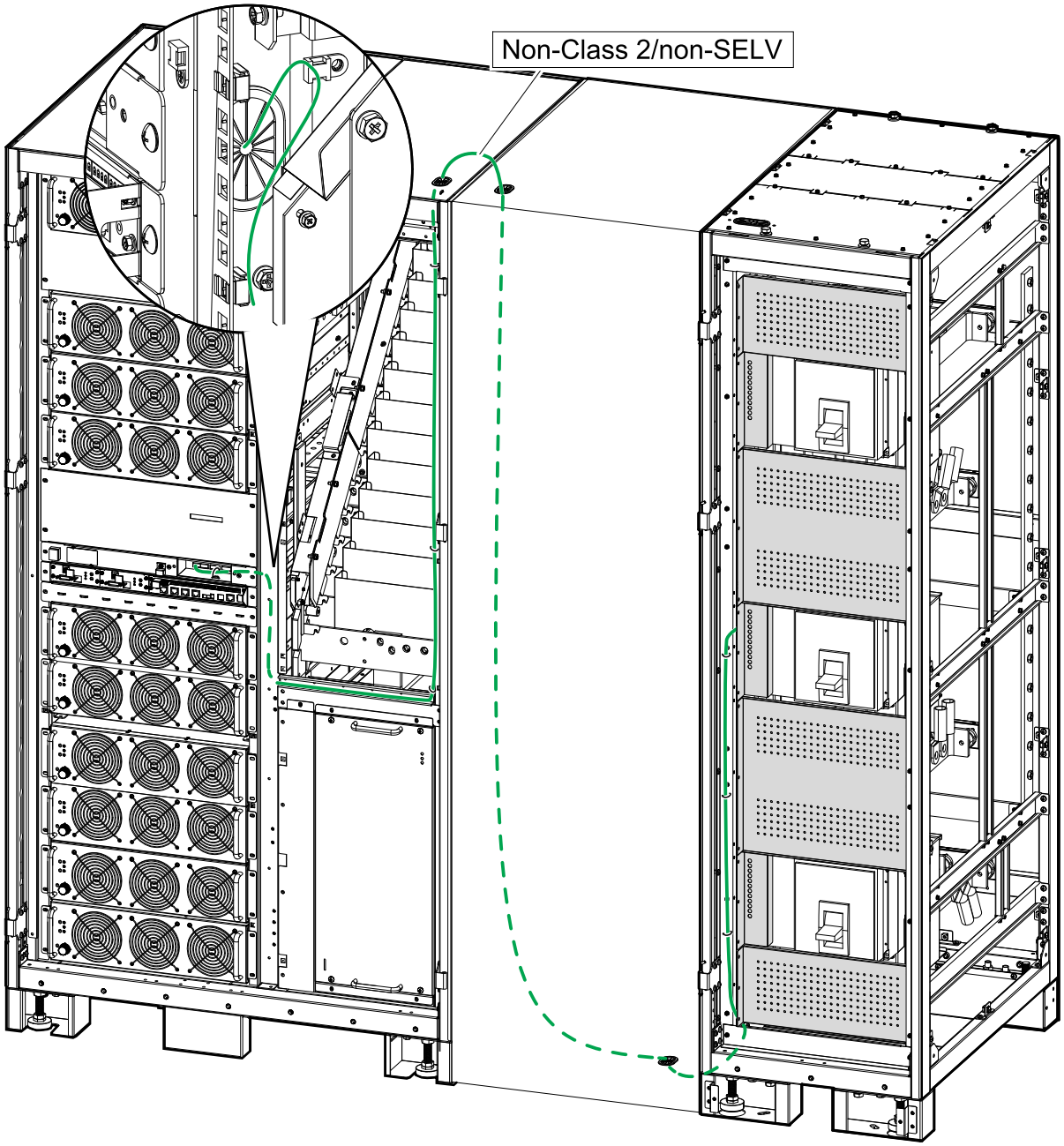

NOTE: The illustration uses Easy UPS 3L as an example. Signal cable routing for Galaxy PX 300–600 kW UPS is similar. Refer to the Galaxy PX 300–600 kW UPS installation manual for details.

5. Fasten the signal cables with cable ties as shown.

Connect the Signal Cables Between the Maintenance Bypass Cabinet and the Easy 3L UPS

AUX Switch Signal Terminals of the UPS

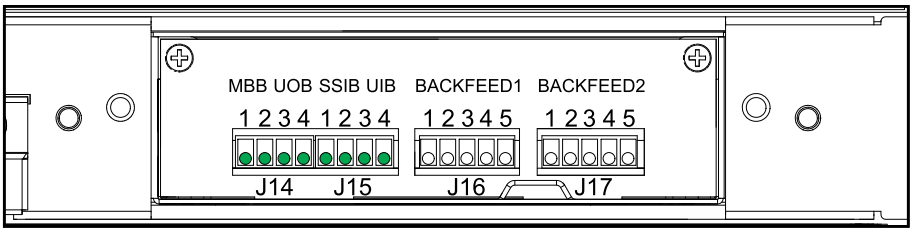

NOTE: These signal cables are considered non-Class 2/non-SELV.

Terminal	Function
J14-1	Maintenance bypass disconnect device (MBB) AUX switch
J14-2	Signal ground (GND)
J14-3	Unit output disconnect device (UOB) AUX switch
J14-4	Signal ground (GND)
J15-1	Static switch input disconnect device (SSIB) AUX switch
J15-2	Signal ground (GND)
J15-3	Unit input disconnect device (UIB) AUX switch
J15-4	Signal ground (GND)

AUX Switch Signal Terminals of the Maintenance Bypass Cabinet

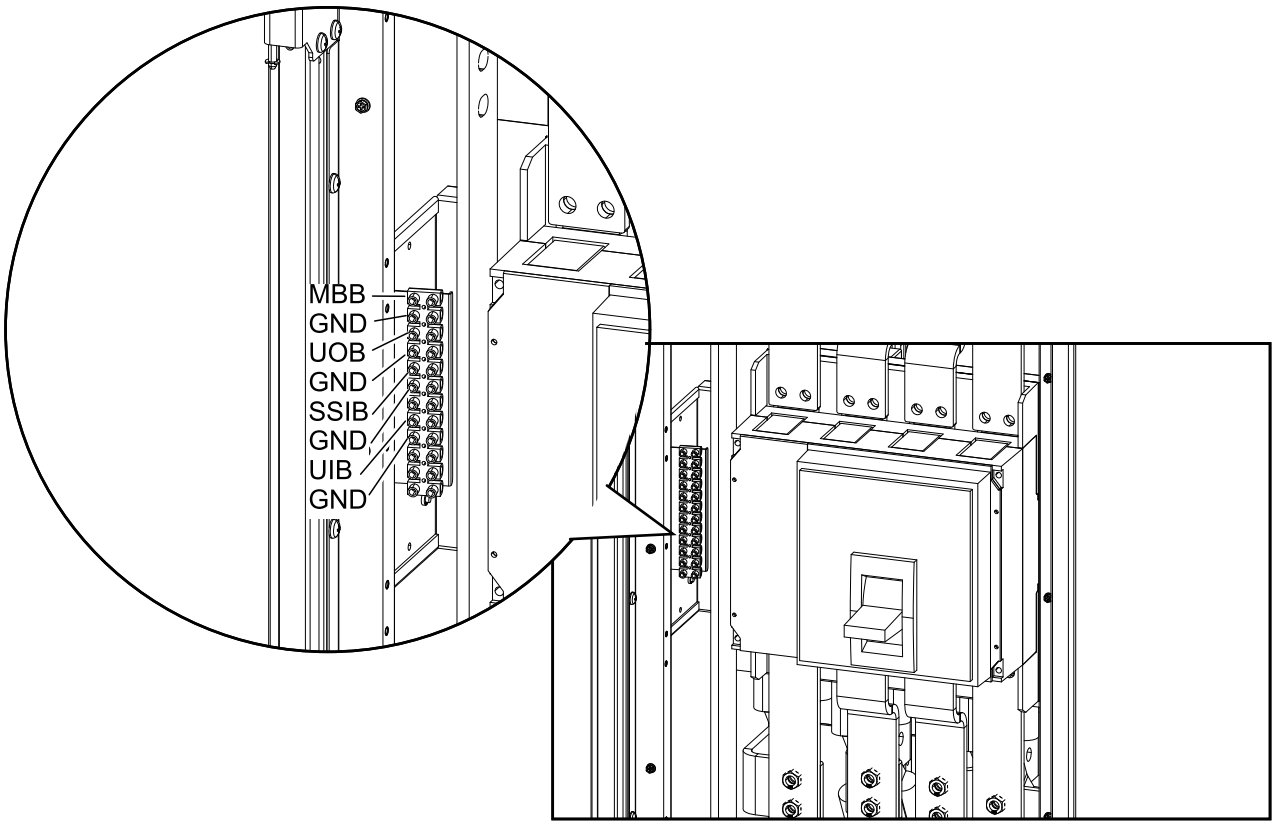

1. Connect the non-Class 2/non-SELV signal cables between the maintenance bypass cabinet and the UPS as shown.

Single Mains System

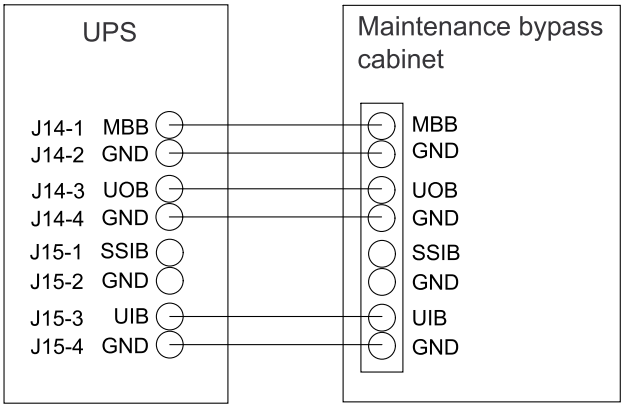

Dual Mains System

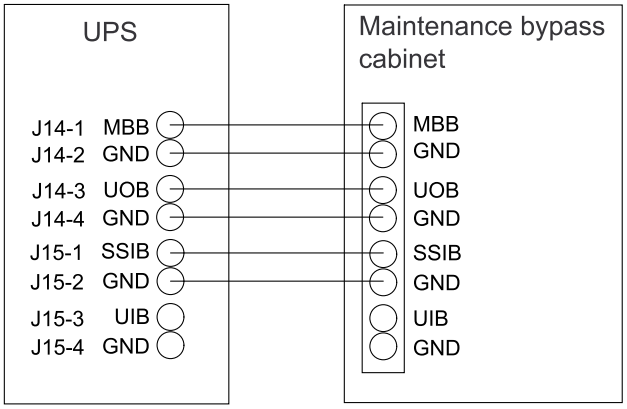

Connect the Signal Cables Between the Maintenance Bypass Cabinet and the Galaxy PX UPS

AUX Switch Signal Terminals of the UPS

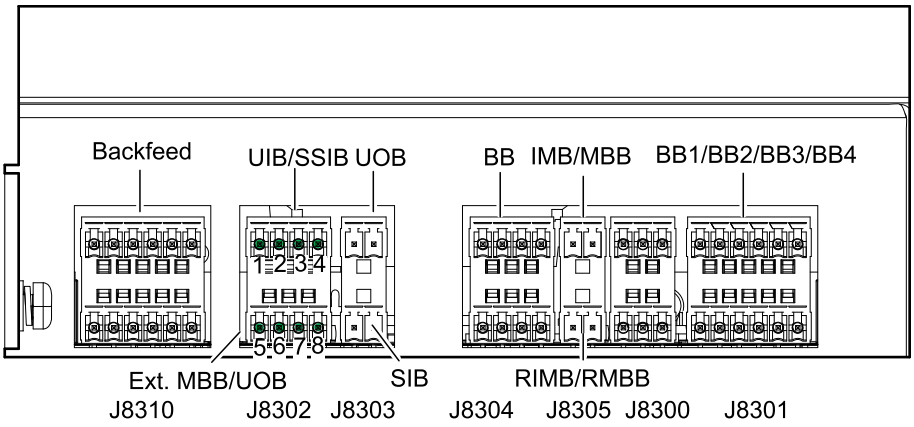

NOTE: These signal cables are considered non-Class 2/non-SELV.

Terminal	Function
J8302- 1	Unit Input disconnect device (UIB)
J8302- 2	Signal ground
J8302- 3	Static switch input disconnect device (SSIB)
J8302-4	Signal ground
J8302-5	External maintenance bypass disconnect device (Ext MBB)
J8302-6	Signal ground
J8302- 7	Unit output disconnect device (UOB)
J8302- 8	Signal ground

AUX Switch Signal Terminals of the Maintenance Bypass Cabinet

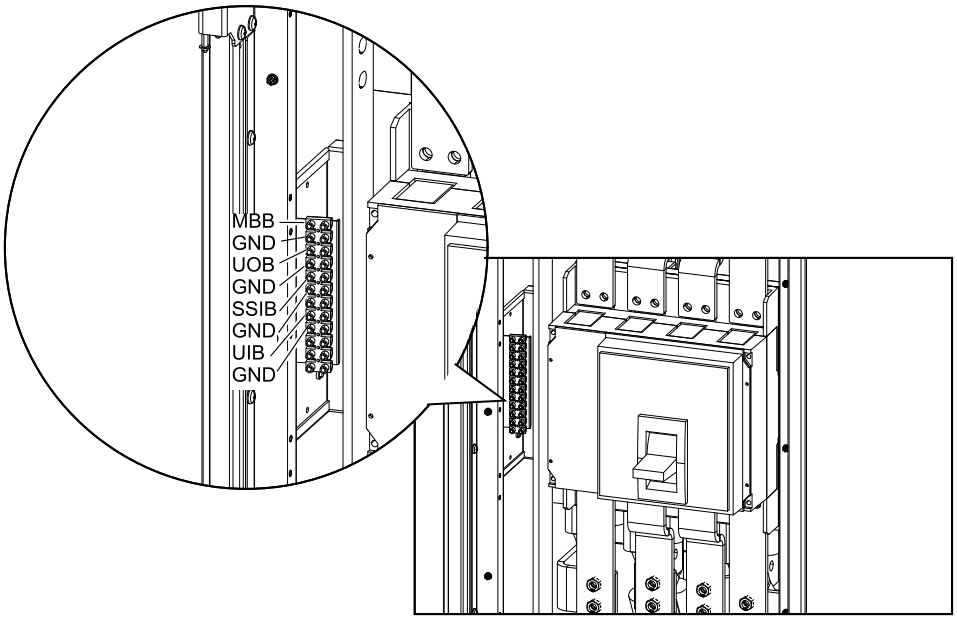

1. Connect the non-Class 2/non-SELV signal cables between the maintenance bypass cabinet and the UPS as shown.

Single Mains System

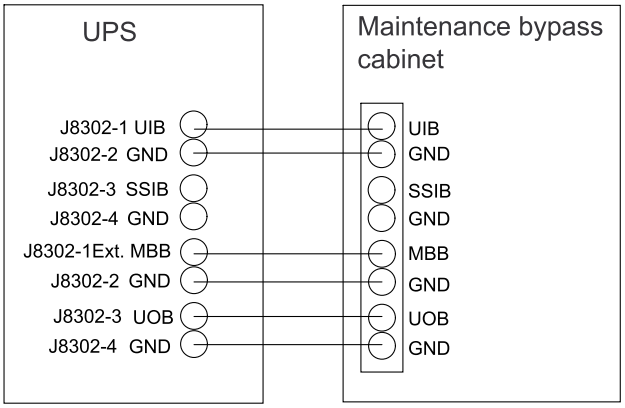

Dual Mains System

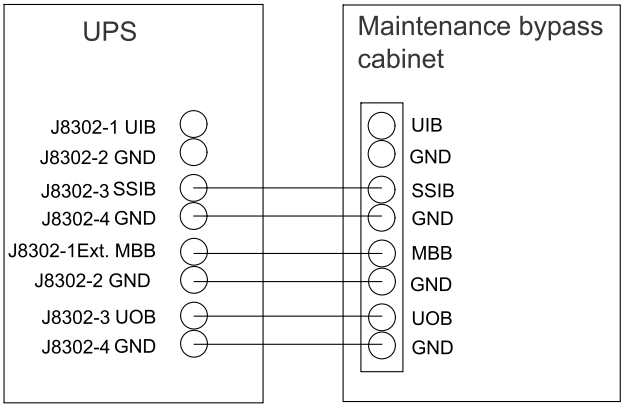

Final Installation

1. Reinstall the three front plates on the maintenance bypass cabinet.
2. Reinstall the right/left side panel(s) (if removed and the rear panel on the maintenance bypass cabinet.
3. Install the four provided kick plates on the maintenance bypass cabinet with the 10 provided M5 screws.
4. **Only for dual mains**: Add the provided labels for SSIB and the diagram label on the maintenance bypass cabinet.

Front View of the Maintenance Bypass Cabinet - Single Mains

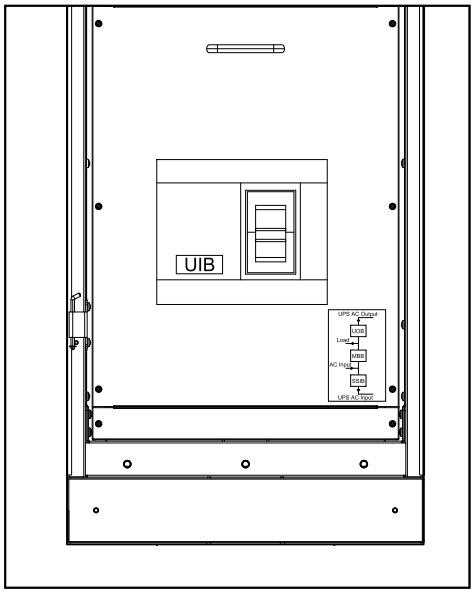

Front View of the Maintenance Bypass Cabinet - Dual Mains

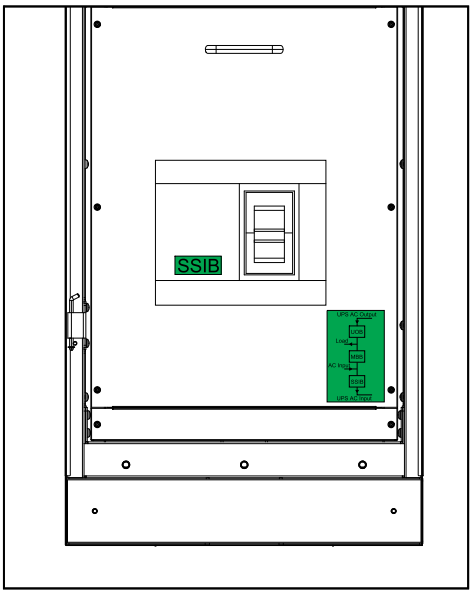

5. Close the front door on the maintenance bypass cabinet.

Decommission or Move the Maintenance Bypass Cabinet to a New Location

NOTE: Follow the instructions in the UPS installation manual to prepare the UPS for being moved/decommissioned.

⚠WARNING

TIP OVER HAZARD

- Read and apply user instructions before work.
- Secure the product in place.
- Secure the product if removing the securing bolts or moving the product.
- Use appropriate lifting equipment,
- Use trained personnel only who know and understand the user instructions.

Failure to follow these instructions can result in death, serious injury, or equipment damage.

1. Shut down the UPS system completely.
2. Lockout/Tagout UIB/SSIB, UOB, and MBB in the maintenance bypass cabinet in the OFF (open) position.
3. Lockout/Tagout all disconnect devices in the upstream switchgear in the OFF (open) position.
4. Lockout/Tagout all battery disconnect devices in the switchgear/battery solution in the OFF (open) position.
5. Open the front door of the maintenance bypass cabinet and the UPS.
6. If present, Lockout/Tagout the backfeed disconnect device BF2 in the OFF (open) position on the UPS.

7. On the maintenance bypass cabinet, remove the three front panels and measure for and verify ABSENCE of voltage with a multimeter probe on all busbars.

⚠⚠DANGER

HAZARD OF ELECTRIC SHOCK, EXPLOSION, OR ARC FLASH

Measure for and verify ABSENCE of voltage with a multimeter probe on all busbars.

Failure to follow these instructions will result in death or serious injury.

Front View of the Maintenance Bypass Cabinet

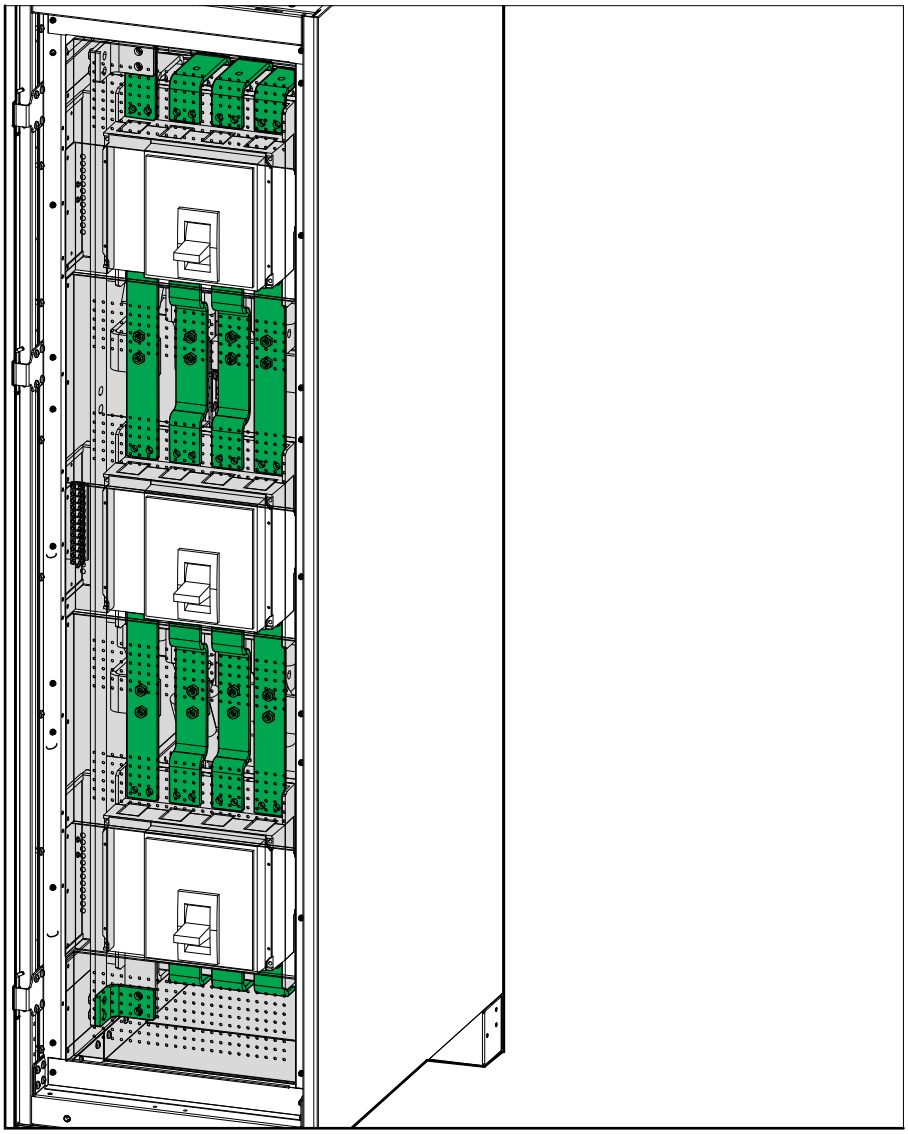

8. Reinstall the three front panels on the maintenance bypass cabinet.

9. Remove the front plates of the UPS.

Front View of the UPS

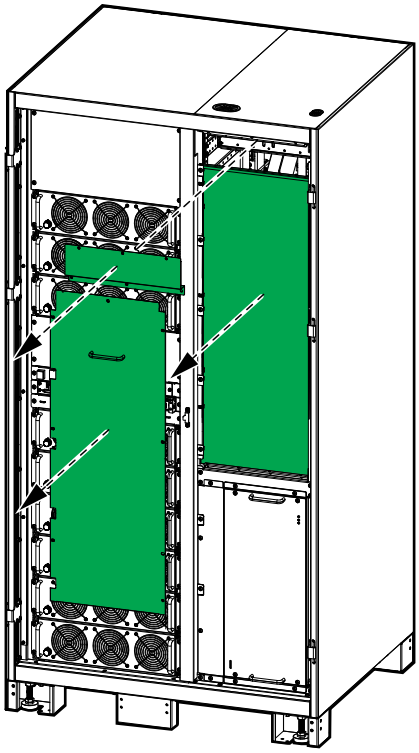

10. On the UPS, measure for and verify ABSENCE of voltage on each input/bypass/output busbar before continuing.

⚠⚠DANGER

HAZARD OF ELECTRIC SHOCK, EXPLOSION, OR ARC FLASH

Measure for and verify ABSENCE of voltage on each input/bypass/output busbar before continuing.

Failure to follow these instructions will result in death or serious injury.

11. Disconnect and remove all signal cables from the UPS.
12. Close and lock the front door of the UPS.

13. Remove the right side panel from the maintenance bypass cabinet.

Front View of the Maintenance Bypass Cabinet

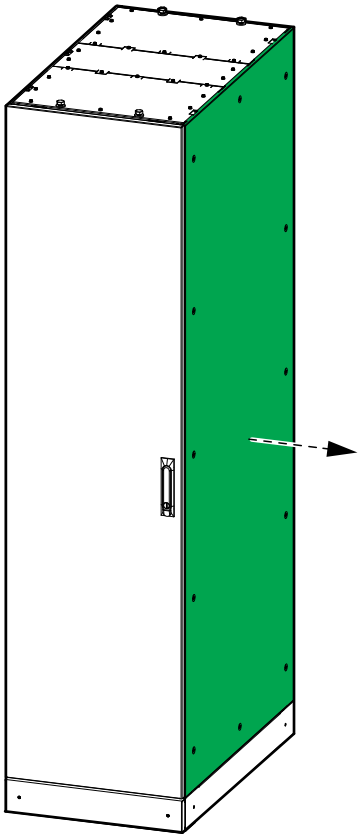

14. Remove the power cables from the maintenance bypass cabinet. See Connect the Power Cables in the Maintenance Bypass Cabinet, page 22 for details. Reinstall the right side panel.
15. Close and lock the front door of the maintenance bypass cabinet.
16. Remove the kick plates and save for reinstallation. See Final Installation, page 32 for details.
17. Raise the feet of the maintenance bypass cabinet. The cabinet can now be moved on a forklift or pallet truck.

⚠WARNING

TIP OVER HAZARD

- Move at a slow pace and pay close attention on the floor conditions and the balance of the maintenance bypass cabinet.

Failure to follow these instructions can result in death, serious injury, or equipment damage.

18. **For transport over longer distances**:

⚠WARNING

HEAVY LOAD

The maintenance bypass cabinet is tall and heavy. Take appropriate precautions during handling and preparation for transport/shipment.

Failure to follow these instructions can result in death, serious injury, or equipment damage.

⚠WARNING

TIP OVER HAZARD

For transport over short or longer distances, ensure:

- that personnel performing the transport have necessary skill and have received adequate training;
- to use appropriate tools to safely lift and transport the maintenance bypass cabinet;
- to protect the product against damage by using appropriate protection (like wrapping or packaging).

Failure to follow these instructions can result in death, serious injury, or equipment damage.

Transportation requirements:

- Mount the maintenance bypass cabinet in a vertical position in the center of a suitable pallet with minimum pallet dimensions: 1000 mm x 1000 mm. The pallet must be suitable for the weight of the maintenance bypass cabinet: 227 kg.
- Use appropriate means of fixation to mount the maintenance bypass cabinet to the pallet.
- The original shipping pallet in combination with the original transportation brackets can be reused, if in undamaged condition.

⚠DANGER

TIPPING HAZARD

- The maintenance bypass cabinet must be appropriately fixed to the pallet immediately after being placed on the pallet.
- The fixation hardware must be strong enough to withstand vibrations and shocks during loading, transport, and unloading.

Failure to follow these instructions will result in death or serious injury.

⚠WARNING

UNEXPECTED EQUIPMENT BEHAVIOR

Do not lift the maintenance bypass cabinet with a forklift/pallet truck directly on the frame as it may bend or damage the frame.

Failure to follow these instructions can result in death, serious injury, or equipment damage.

19. Perform one of the following:
    - Decommission the maintenance bypass cabinet, OR
    - Move the maintenance bypass cabinet to a new location to install it.

20. **Only for installing the maintenance bypass cabinet in a new location**: Follow the installation manual to install the maintenance bypass cabinet in the new location. See Installation Procedure, page 15 for installation overview. Startup must only be performed by Schneider Electric.

⚠⚠DANGER

HAZARD OF ELECTRIC SHOCK, EXPLOSION, OR ARC FLASH

Startup must only be performed by Schneider Electric.

Failure to follow these instructions will result in death or serious injury.

Schneider Electric
1884 Boulevard de la Défense
92000 Nanterre
France

www.se.com

© 2025 – 2026 Schneider Electric. All rights reserved.

990-1000015B-001