# REP Sense Protocol Repeater
## Installation and Commissioning Manual




## Safety Information

Electrical equipment should be installed, operated, serviced, and maintained only by qualified personnel. No responsibility is assumed by Schneider Electric for any consequences arising out of the use of this material.

A qualified person is one who has skills and knowledge related to the construction, installation, and operation of electrical equipment and has received safety training to recognize and avoid the hazards involved.

### *NOTICE*

**SHORT CIRCUIT AND ELECTROSTATIC DISCHARGE**

- Remove all power from the fire detection panel before you connect or disconnect wires in the fire detection system, and before you install or replace any parts.
- First disconnect the battery, then the main power supply.
- Use electrostatic discharge (ESD) protection when you connect or disconnect wires in the fire detection system, when you install or replace any parts and when you handle circuit boards and set jumpers or dip switches.

**Failure to follow these instructions can result in equipment damage.**

If you install an expansion board, the following notice applies:

### *NOTICE*

**MISALIGNMENT**

Make sure that the expansion board slides in between the flanges.

**Failure to follow these instructions can result in equipment damage.**

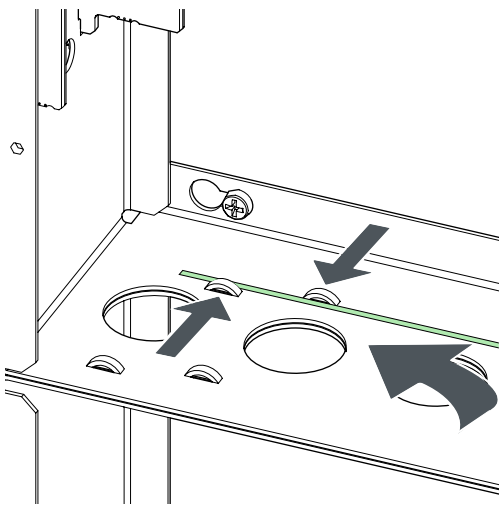

## REP Sense Protocol Repeater

The REP Sense Protocol Repeater duplicates the INFO serial communication line. A maximum of four Protocol Repeaters can be connected to Esmi Sense Fire Detection Panels FDP221, FDP252 and FDP292 and to FX3Net Systems.

O1950GB5, May 2025
© 2025 Schneider Electric. All rights reserved. Trademarks and registered trademarks are the property of their respective owners.

# REP Sense Protocol Repeater
## Installation and Commissioning Manual

### Mechanical Installation

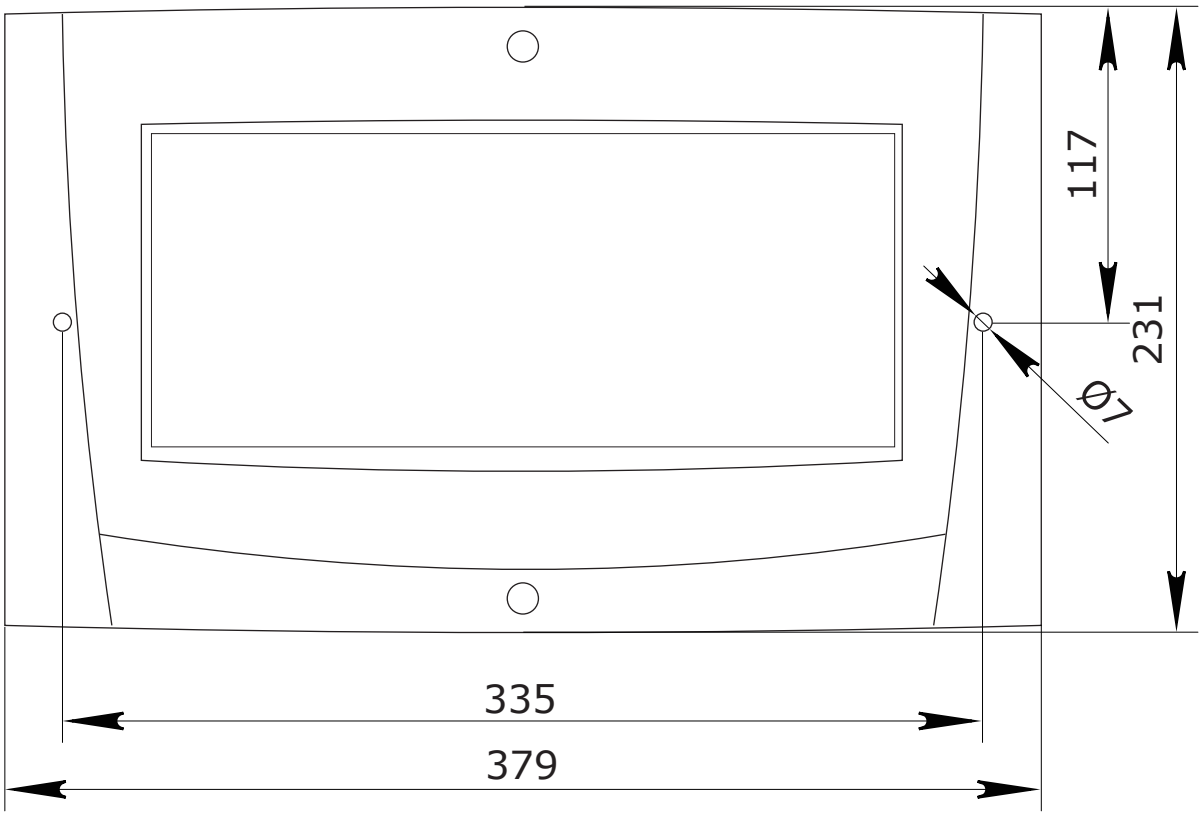


Protocol Repeater mechanical installation

## Technical Data

### Protocol Repeater Technical Data

| | |
|---|---|
| Part number | FFS00703848 |
| Dimensions (W × H × D) | 379 × 231 × 54 mm |
| Weight | 2.1 kg |
| Color | White |
| Operating temperature | +5 °C to +40 °C |
| Maximum relative humidity | 95% |
| Operating voltage | 19–30 VDC |
| Standby current | 50 mA |
| Serial communication ports | In: RS-485 or RS-232<br>Out: RS-485 |
| IP rating | IP30 |

O1950GB5, May 2025
© 2025 Schneider Electric. All rights reserved. Trademarks and registered trademarks are the property of their respective owners.

# REP Sense Protocol Repeater
## Installation and Commissioning Manual

### Part Numbers

| Product | Part number | Description |
|---|---|---|
| REP | FFS00703848 | Panel version<br>wall mounted |
| REPX-OB | FFS00703833 | PCB version<br>installed in extension slot in fire detection panel |

### Electrical Connections

***NOTICE***

**NON-COMPLIANCE**

For compliance with EN 54-2, connect both power supply inputs if the board is located in a stand-alone cabinet.

**Failure to follow these instructions can result in negative business impact and/or legal action.**

If the expansion board is installed in the fire detection panel, power is supplied to the board via the backbone.

**IMPORTANT:** Use either the isolated RS-232 output or the isolated RS-485 output.

You cannot use both the isolated RS-232 and the isolated RS-485 outputs at the same time.


© 2025 Schneider Electric. All rights reserved. Trademarks and registered trademarks are the property of their respective owners.

# REP Sense Protocol Repeater
## Installation and Commissioning Manual

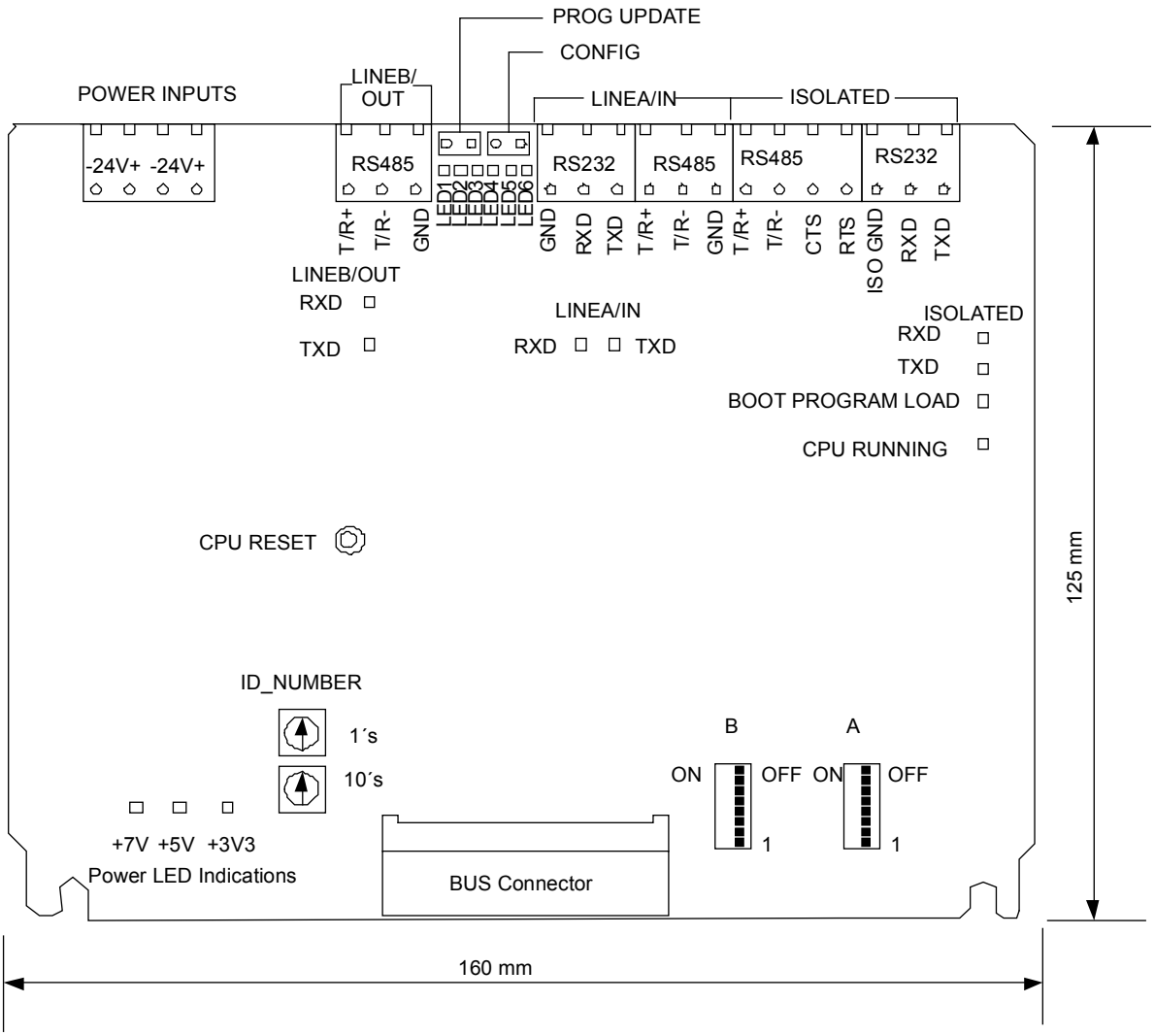


Electrical connections

## Settings and LED Indications

### A Dip Switch

| | | |
|---|---|---|
| A1 | OFF<br>ON | N/A |
| A2 | OFF<br>ON | N/A |
| A3 | OFF<br>ON | FDP Fire Detection Panel connection<br>ESA/MESA panel connection (message set F or older) |


© 2025 Schneider Electric. All rights reserved. Trademarks and registered trademarks are the property of their respective owners.

# REP Sense Protocol Repeater
## Installation and Commissioning Manual

*Continued*

| | | |
|---|---|---|
| A4 | OFF<br>ON | Not in use |
| A5 | OFF<br>ON | Not in use |
| A6 | OFF<br>ON | Not in use |
| A7 | OFF<br>ON | Not in use |
| A8 | OFF<br>ON | Normal state<br>N/A |

### B Dip Switch

| | | |
|---|---|---|
| B1 | OFF<br>ON | EXT isolated line faults monitored<br>EXT isolated line faults not monitored |
| B2 | OFF<br>ON | EXT isolated line not in use<br>EXT isolated line in use |
| B3 | OFF<br>ON | OUT B port not in use<br>OUT B port in use |
| B4 | OFF<br>ON | EXT isolated port baud rate. See table below. |
| B5 | OFF<br>ON | EXT isolated port baud rate. See table below. |
| B6 | OFF<br>ON | IN A port baud rate 1200<br>IN A port baud rate 9600 |
| B7 | OFF<br>ON | OUT B port baud rate 1200<br>OUT B port baud rate 9600 |
| B8 | OFF<br>ON | To be OFF! Only for service purposes. |

### EXT Isolated Port Baud Rate

| **B4** | **B5** | **EXT port baud rate** |
|---|---|---|
| OFF | OFF | 1200 |
| ON | OFF | 2400 |
| OFF | ON | 4800 |

O1950GB5, May 2025
© 2025 Schneider Electric. All rights reserved. Trademarks and registered trademarks are the property of their respective owners.

# REP Sense Protocol Repeater
## Installation and Commissioning Manual

*Continued*

| B4 | B5 | EXT port baud rate |
|---|---|---|
| ON | ON | 9600 |

## LED Indications in Normal Use

| | | |
|---|---|---|
| LED 1 | Continuous<br>Flashing (1 s)<br>Flashing rapidly (10 ms) | N/A |
| LED 2 | Continuous<br>Flashing (1 s)<br>Flashing slowly (4 s) | N/A |
| LED 3 | Continuous<br>Flashing | Power supply input 1 or 2 fault<br>N/A |
| LED 4 | Continuous<br>Flashing | IN A line fault<br>IN A HW fault |
| LED 5 | Continuous<br>Flashing | OUT B line fault<br>OUT B HW fault |
| LED 6 | Continuous<br>Flashing | EXT isolated line fault<br>EXT isolated HW fault |

**NOTE:** In system fault all LED indications are continuously lit.

## LED Indications in Start-up Condition (10 seconds)

| | | |
|---|---|---|
| LED 1 | Continuous<br>OFF | Display HW installed<br>Display HW not installed |
| LED 2 | Continuous<br>OFF | Isolated port installed<br>Isolated port not installed |
| LED 3 | Continuous<br>OFF | N/A |
| LED 4 | Continuous<br>OFF | N/A |
| LED 5 | Continuous<br>OFF | N/A |
| LED 6 | Continuous<br>OFF | MCOX HW installed<br>MCOX HW not installed |

O1950GB5, May 2025
© 2025 Schneider Electric. All rights reserved. Trademarks and registered trademarks are the property of their respective owners.

# REP Sense Protocol Repeater
## Installation and Commissioning Manual

### Jumpers for Service Purposes

| Jumper | Connected | Removed |
|---|---|---|
| Program update | Program update | Normal use |
| Configuration | N/A | N/A |

### System Principle

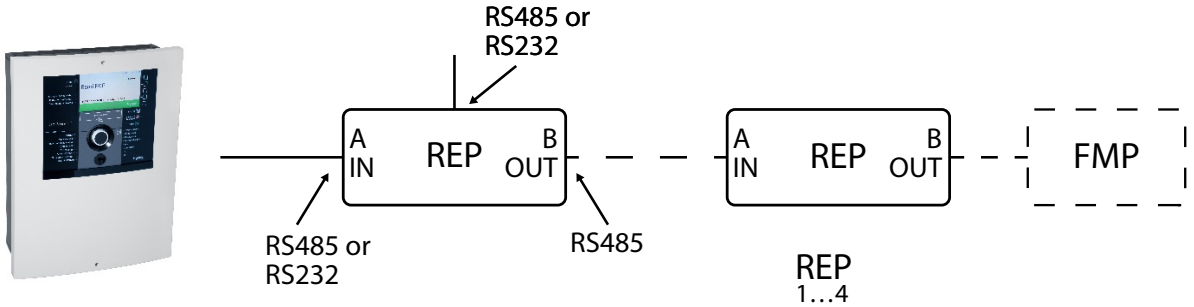


System principle

**NOTE:** The maximum number of REP and REPX-OB units connected to one FDP Fire Detection Panel is four.

**NOTE:** The maximum number of REP, REPX-OB, FMP, DAP, MCO, MCOX-OB, ZLPX, and ZLPX-IC Sense edition units connected to one FDP Fire Detection Panel is 16.

**NOTE:** The maximum RS-485 cable length between two devices is 1,000 m.

**NOTE:** The maximum RS-232 cable length is 10 m.

## Company Information

Schneider Electric Buildings AB
Mobilvägen 8
223 62 Lund
Sweden


© 2025 Schneider Electric. All rights reserved. Trademarks and registered trademarks are the property of their respective owners.

# REP Sense Protocol Repeater
## Installation and Commissioning Manual

Life Is On Schneider Electric

se.com

O1950GB5, May 2025
© 2025 Schneider Electric. All rights reserved. Trademarks and registered trademarks are the property of their respective owners.