MPO Sense Multi Protocol Converter
Installation and Commissioning Manual



Safety Information

Electrical equipment should be installed, operated, serviced, and maintained only by qualified personnel. No responsibility is assumed by Schneider Electric for any consequences arising out of the use of this material.

A qualified person is one who has skills and knowledge related to the construction, installation, and operation of electrical equipment and has received safety training to recognize and avoid the hazards involved.

NOTICE

SHORT CIRCUIT AND ELECTROSTATIC DISCHARGE

- Remove all power from the fire detection panel before you connect or disconnect wires in the fire detection system, and before you install or replace any parts.
- First disconnect the battery, then the main power supply.
- Use electrostatic discharge (ESD) protection when you connect or disconnect wires in the fire detection system, when you install or replace any parts and when you handle circuit boards and set jumpers or dip switches.

Failure to follow these instructions can result in equipment damage.

If you install an expansion board, the following notice applies:

NOTICE

MISALIGNMENT

Make sure that the expansion board slides in between the flanges.

Failure to follow these instructions can result in equipment damage.

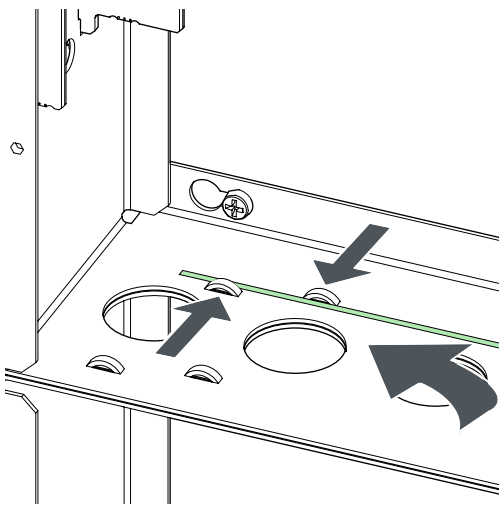

MPO Sense Multi Protocol Converter

The Multi Protocol Converter operates as an interface between the INFO communication protocol and a number of defined external protocols.

In one FDP system up to four Multi Protocol Converters can be connected.

The Multi Protocol Converter can be connected to FDP Fire Detection Panels and FX3Net Systems.

O1965GB5, May 2025
© 2025 Schneider Electric. All rights reserved. Trademarks and registered trademarks are the property of their respective owners.

MPO Sense Multi Protocol Converter
Installation and Commissioning Manual

Mechanical Dimensions

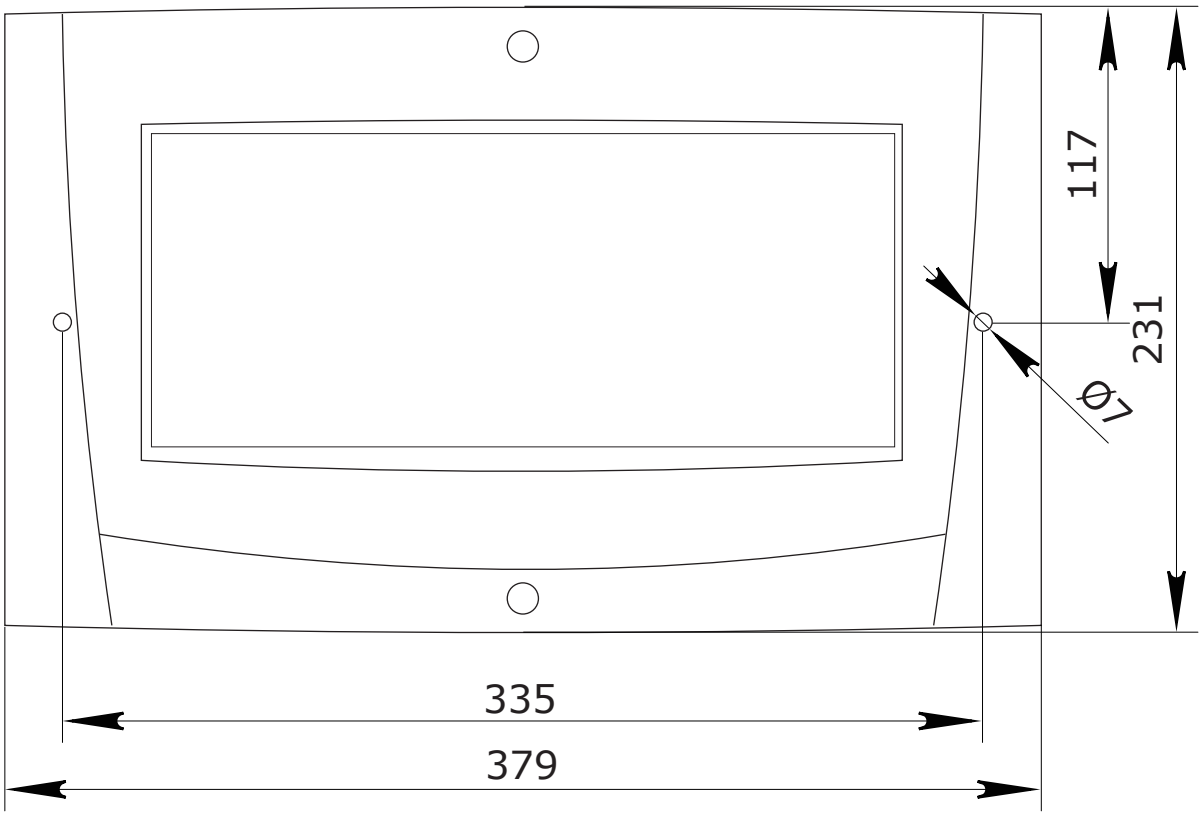

Multi Protocol Converter mechanical dimensions

Technical Data

Multi Protocol Converter Technical Data

Part number	FFS00703853
Dimensions (W × H × D)	379 × 231 × 54 mm
Weight	2.1 kg
Color	White
Operating temperature	+5 °C to +40 °C
Maximum relative humidity	95%
Operating voltage	19–30 VDC
Standby current	50 mA
Serial communication ports	In: RS-485 or RS-232 Out: RS-485 Isolated: RS-232
IP rating	IP30

O1965GB5, May 2025
© 2025 Schneider Electric. All rights reserved. Trademarks and registered trademarks are the property of their respective owners.

MPO Sense Multi Protocol Converter
Installation and Commissioning Manual

Multi Protocol Converter Part Numbers

Product	Part Number	Description
MPO	FFS00703853	Panel version wall mounted
MPOX-OB	FFS00703852	Circuit board version installed in expansion slot in fire detection panel

FDP and INFO Device Connection

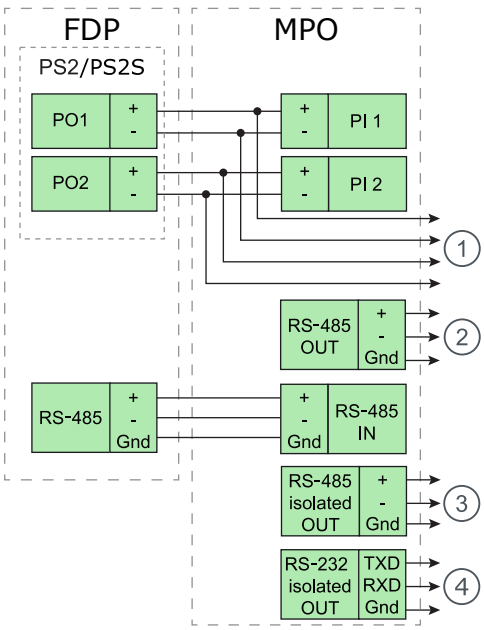

FDP and MPO (stand-alone panel) connection

Component	Description
1	24 VDC to the next device
2	INFO device communication line to the next device
3	Do not use
4	Isolated connection to third party device

IMPORTANT: Use only the RS-232 port for an isolated connection to a third-party device.

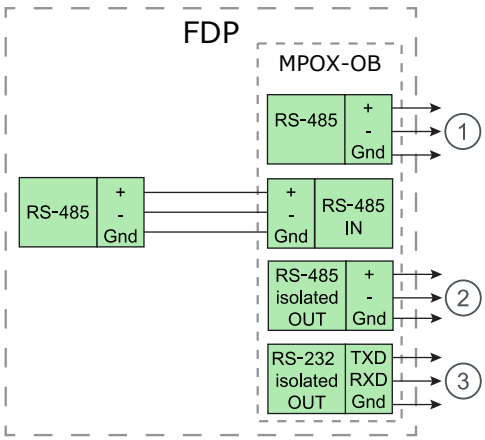

FDP and MPOX-OB (expansion board) connection

Component	Description
1	INFO device communication line to the next device
2	Do not use
3	Isolated connection to third party device

IMPORTANT: Use only the RS-232 port for an isolated connection to a third-party device.

IMPORTANT:
- You can connect up to 16 DAP, FMP, REP, REPX-OB, MCO, MCOX-OB, MPO, MPOX-OB units to one FDP fire detection panel.
- Use the RS-232 or USB setting for configuration.
- The maximum RS-485 cable length between devices is 1,000 m.
- The maximum RS-232 cable length between devices is 10 m.

IMPORTANT:
- You can connect up to four Multi Protocol Converters to one FDP fire detection panel.

O1965GB5, May 2025
© 2025 Schneider Electric. All rights reserved. Trademarks and registered trademarks are the property of their respective owners.

MPO Sense Multi Protocol Converter
Installation and Commissioning Manual

- Set DIP switches B4 to ON and B7 to the correct baud rate if the MPO output is used for INFO devices.

Electrical Connections

NOTICE

NON-COMPLIANCE

For compliance with EN 54-2, connect both power supply inputs if the board is located in a stand-alone cabinet.

Failure to follow these instructions can result in negative business impact and/or legal action.

If the expansion board is installed in the fire detection panel, power is supplied to the board via the backbone.

IMPORTANT: Use either the isolated RS-232 output or the isolated RS-485 output.

You cannot use both the isolated RS-232 and the isolated RS-485 outputs at the same time.

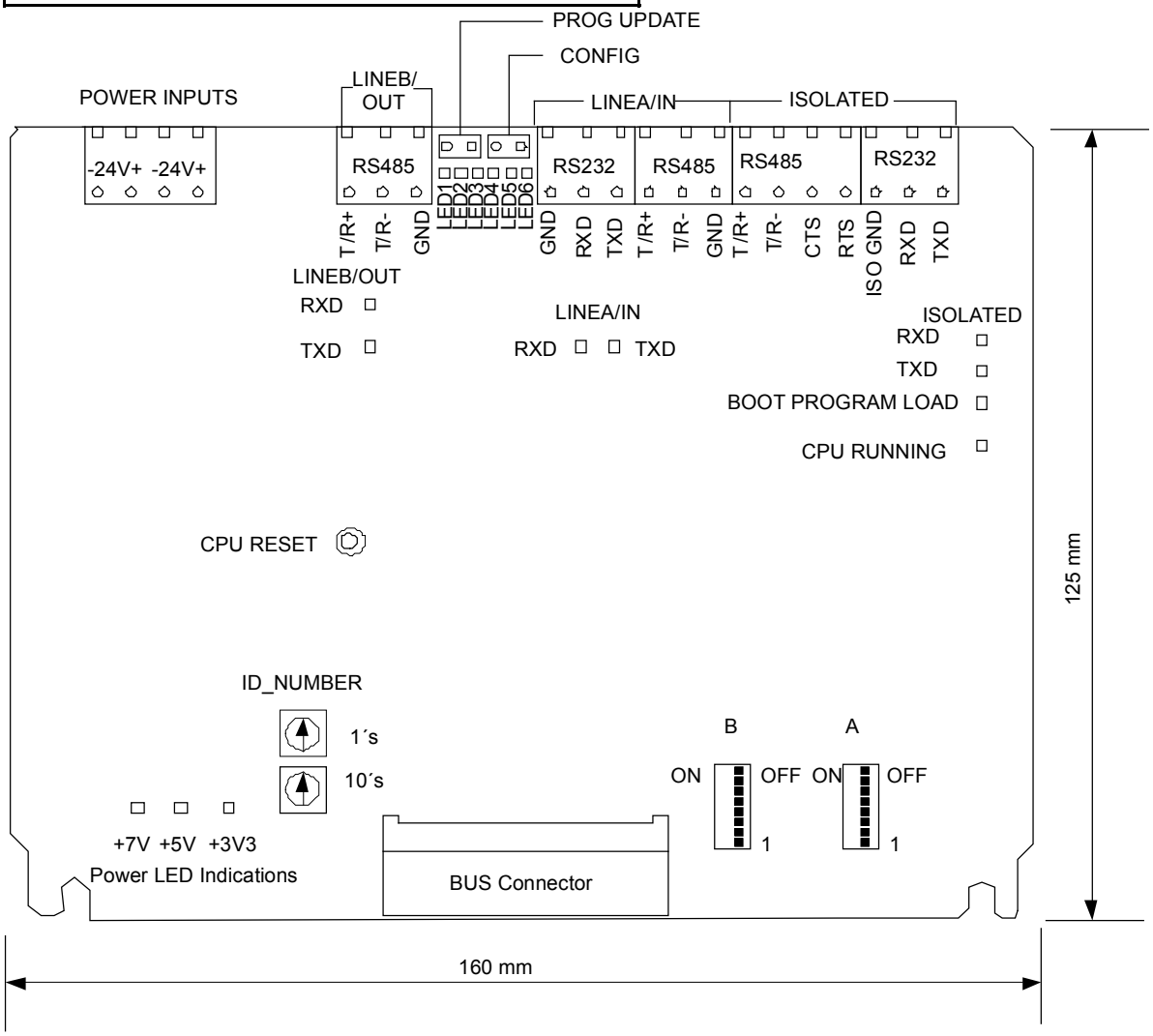

Circuit board

© 2025 Schneider Electric. All rights reserved. Trademarks and registered trademarks are the property of their respective owners.

MPO Sense Multi Protocol Converter
Installation and Commissioning Manual

Settings and LED Indications

DIP Switch A

A1	OFF	Normal (Recommended setting)
	ON	Always zone and address (SEK & ADR) before text, if switch A3 = OFF
A2	OFF	Not sending address fault to paging system
	ON	Sending address fault to paging system
A3	OFF	Only sending text after trigger character
	ON	Sending all text (including description) from fire detection panel (Recommended setting)
A4	OFF	Not sending communication fault message to fire detection panel when no contact with paging system
	ON	Sending communication fault message to fire detection panel when no contact with paging system
A5	OFF	Ascom character set 2 (Recommended setting)
	ON	Ascom character set 1 (U910 characters)
A6	OFF	Normal
	ON	Sending paging ID = 999
A7	OFF	Normal
	ON	Sending paging ID = 9999
A8	OFF	Normal
	ON	Sends one message with ID as set by switches A6-A7 and text "TESTALARM"

DIP Switch B

B1	OFF	MS Windows codepage 1252
	ON	MS-DOS codepage 850 (Multilingual Latin 1)
B2	OFF	Not used
	ON	
B3	OFF	Used with FDP and FX systems
	ON	Used with ESA/MESA systems
B4	OFF	OUT B port not in use
	ON	OUT B port INFO protocol activated
B5	OFF	Not used
	ON	
B6	OFF	IN A port baud rate 1200
	ON	IN A port baud rate 9600

© 2025 Schneider Electric. All rights reserved. Trademarks and registered trademarks are the property of their respective owners.

MPO Sense Multi Protocol Converter
Installation and Commissioning Manual

Continued

B7	OFF	OUT B port baud rate 1200
	ON	OUT B port baud rate 9600
B8	OFF	Must be OFF! Only for service purposes.
	ON	

LED Indications in Normal Use

LED 1	Continuous	Non-acknowledged alarm in memory
	Flashes	Flashes rapidly in configuration mode
LED 2	Continuous	Non-acknowledged polling in memory
	Flashes	N/A
LED 3	Continuous	MPO parameters data in flash
	Flashes	MPO data corrupted
LED 4	Continuous	N/A
	Flashes	
LED 5	Continuous	No connection to fire detection panel
	Flashes	N/A
LED 6	Continuous	No connection to external system
	Flashes	N/A

NOTE: In case of a system fault all LEDs are continuously lit.

LED Indications during Startup (10 seconds)

LED 1	Continuous	Display hardware installed (not used with MPO)
	OFF	Display hardware not installed
LED 2	Continuous	Isolated port installed
	OFF	Isolated port not installed
LED 3	Continuous	N/A
	OFF	
LED 4	Continuous	N/A
	OFF	
LED 5	Continuous	N/A
	OFF	
LED 6	Continuous	Software problem detected
	OFF	Normal startup

O1965GB5, May 2025
© 2025 Schneider Electric. All rights reserved. Trademarks and registered trademarks are the property of their respective owners.

MPO Sense Multi Protocol Converter
Installation and Commissioning Manual

Jumpers for Service Purposes

Jumper	Connected	Removed
Program update	Program update	Normal use
Configuration	Configuration mode	Normal use

Configuration

NOTICE

SHORT CIRCUIT

Disconnect the connection to the fire detection panel or the previous INFO device during configuration.

Failure to follow these instructions can result in equipment damage.

To transfer a configuration:

① Connect the configuration jumper.

② Press CPU reset.

③ Remove the RS-485 cable from LINE A (the fire detection panel port).

④ Connect an RS-232 cable from a PC to LINE A/RS-232.

⑤ Make sure that LED 1 is flashing rapidly.

You can now start the WinFMPX PC program (version 2.3.1 and newer) to read and write MPO parameters data.

NOTE: All other communications stop at this point.

⑥ Transfer the configuration with 9600 baud.

To leave configuration mode:

① Remove the configuration jumper.

② Remove the RS-232 cable from LINE A/RS-232.

③ Connect the RS-485 cable to LINE A (the fire detection panel port).

④ Reboot the device.

Operating Modes

Hex switch 1's

NOTE: Hex switch position 7 is recommended if the receiving system has built-in functionality for handling reset commands. A reset command is then sent to the receiving system when an alarm reset is done.

However, most receiving systems must be programmed to accept reset commands.

Multi Protocol Converter Operating Modes, Isolated Port RS-232

	Receiving system	Baud	Parity	Data bits	Stop bit
0	ESPA 4.4.4 format	9600	no	8	1
1	ESPA 4.4.4 format	1200	even	7	2
7	SCADA, extended ESPA protocol on mode 0 & 1 ESPA 4.4.4 format	9600	no	8	1

© 2025 Schneider Electric. All rights reserved. Trademarks and registered trademarks are the property of their respective owners.

MPO Sense Multi Protocol Converter
Installation and Commissioning Manual

Continued

	Receiving system	Baud	Parity	Data bits	Stop bit
8	Printer, alarm printout	9600	no	8	1
9	SafeTel/AddSecure ESPA 4.4.4 format	9600	no	8	1

Team Code Settings

Team codes in ESPA communication depend on the language that is selected in the fire detection panel.

	Language selected in fire detection panel	Fire alarm	Pre-alarm	Fault alarm
0,8,9	English	889	889	889
1	Finnish	901	902	903
2,6	Swedish	990	990	990
3	Norwegian	9999	9999	9999
4	Danish	9002	9003	9004
11	Belgium	2100	2050	2000

Company Information

Schneider Electric Buildings AB
Mobilvägen 8
223 62 Lund
Sweden

O1965GB5, May 2025
© 2025 Schneider Electric. All rights reserved. Trademarks and registered trademarks are the property of their respective owners.