Galaxy VXL

500-1250 kW UPS 380/400/415 V (IEC)

Installation

Latest updates are available on the Schneider Electric website

6/2026



www.se.com

Legal Information

The information provided in this document contains general descriptions, technical characteristics and/or recommendations related to products/solutions.

This document is not intended as a substitute for a detailed study or operational and site-specific development or schematic plan. It is not to be used for determining suitability or reliability of the products/solutions for specific user applications. It is the duty of any such user to perform or have any professional expert of its choice (integrator, specifier or the like) perform the appropriate and comprehensive risk analysis, evaluation and testing of the products/solutions with respect to the relevant specific application or use thereof.

The Schneider Electric brand and any trademarks of Schneider Electric and its subsidiaries referred to in this document are the property of Schneider Electric or its subsidiaries. All other brands may be trademarks of their respective owner.

This document and its content are protected under applicable copyright laws and provided for informative use only. No part of this document may be reproduced or transmitted in any form or by any means (electronic, mechanical, photocopying, recording, or otherwise), for any purpose, without the prior written permission of Schneider Electric.

Schneider Electric does not grant any right or license for commercial use of the document or its content, except for a non-exclusive and personal license to consult it on an "as is" basis.

Electrical equipment should be installed, operated, serviced, and maintained only by qualified personnel. No responsibility is assumed by Schneider Electric for any consequences arising out of the use of this material.

Schneider Electric reserves the right to make changes or updates with respect to or in the content of this document or the format thereof, at any time without notice.

To the extent permitted by applicable law, no responsibility or liability is assumed by Schneider Electric and its subsidiaries for any errors or omissions in the informational content of this document, as well as any non-intended use or misuse of the content thereof.

Access to Your Product Manuals Online

Find the UPS Manuals, Submittal Drawings, and Other Documentation for Your Specific UPS Here:

In your web browser, type in https://www.go2se.com/ref= and the commercial reference for your product.

Example: *https://www.go2se.com/ref=**GVXL0K1250HS***

Find the UPS Manuals, Relevant Auxiliary Product Manuals, and Option Manuals Here:

Scan the code to go to the Galaxy VXL online manual portal:

IEC (380/400/415 V)

https://productinfo.se.com/galaxyvxl_iec/

Here you can find your UPS installation manual, UPS operation manual, and UPS technical specifications, and you can also find installation manuals for your auxiliary products and options.

This online manual portal is available on all devices and offers digital pages, search functionality across the different documents in the portal, and PDF download for offline use.

Learn More About the Galaxy VXL Here:

Go to *https://www.se.com/ww/en/product-range/209756733* to learn more about this product.

Table of Contents

Table of Contents 5
Important Safety Instructions — SAVE THESE INSTRUCTIONS 7
- Electromagnetic Compatibility 8
- Safety Precautions 8
  - Additional Safety Precautions After Installation 10
- Electrical Safety 11
- Battery Safety 13
- Cybersecurity and Physical Security Recommendations 15
- Symbols Used in the Product 16

Specifications 17
- Specifications for 500 kW UPS 17
- Specifications for 600 kW UPS 20
- Specifications for 625 kW UPS 23
- Specifications for 750 kW UPS 26
- Specifications for 875 kW UPS 29
- Specifications for 1000 kW UPS 32
- Specifications for 1125 kW UPS 35
- Specifications for 1250 kW UPS 38
- Upstream and Downstream Protection for 380/400/415 V (IEC) 41
- Recommended Cable Sizes for 380/400/415 V (IEC) 45
  - Load Sharing in a Parallel System 47
- Recommended Bolt and Lug Sizes for 380/400/415 V (IEC) 48
- Inverter Short Circuit Capabilities (Bypass not Available) 49
- Leakage Current 52
- Torque Specifications 52
- Requirements for a Third Party Battery Solution 53
  - Third Party Battery Circuit Breaker Requirements 53
  - Guidance for Organizing Battery Cables 54
- Environment 55
- Compliance 55
- UPS Weights and Dimensions 56
- Clearance 56

Single System Overview 57
Parallel System Overview 58
Installation Procedure for the UPS 59
Remove the Front Doors from the UPS 61
Position the UPS without Seismic Anchoring 63
Mount the Seismic Anchoring and Position the UPS 64
Prepare the UPS for Top Cable Entry 70
Connect the Power Cables in the UPS 73
Connect the Signal Cables for External Synchronization 79
Connect the Signal Cables 88
Connect the Signal Cables from Switchgear and Third-Party Auxiliary Products 92

Connect the External Communication Cables 98
Connect the Modbus Cables 99
Connect the PBUS Cables 101
Install the Power Module(s) 102
Backfeed Protection 106
Final installation 109
Decommission or Move the UPS to a New Location 112

Important Safety Instructions — SAVE THESE INSTRUCTIONS

Read these instructions carefully and look at the equipment to become familiar with it before trying to install, operate, service or maintain it. The following safety messages may appear throughout this manual or on the equipment to warn of potential hazards or to call attention to information that clarifies or simplifies a procedure.



The addition of this symbol to a “Danger” or “Warning” safety message indicates that an electrical hazard exists which will result in personal injury if the instructions are not followed.



This is the safety alert symbol. It is used to alert you to potential personal injury hazards. Obey all safety messages with this symbol to avoid possible injury or death.

⚠ DANGER

DANGER indicates a hazardous situation which, if not avoided, **will result in** death or serious injury.

Failure to follow these instructions will result in death or serious injury.

⚠ WARNING

WARNING indicates a hazardous situation which, if not avoided, **could result in** death or serious injury.

Failure to follow these instructions can result in death, serious injury, or equipment damage.

⚠ CAUTION

CAUTION indicates a hazardous situation which, if not avoided, **could result in** minor or moderate injury.

Failure to follow these instructions can result in injury or equipment damage.

NOTICE

NOTICE is used to address practices not related to physical injury. The safety alert symbol shall not be used with this type of safety message.

Failure to follow these instructions can result in equipment damage.

Please Note

Electrical equipment should only be installed, operated, serviced, and maintained by qualified personnel. No responsibility is assumed by Schneider Electric for any consequences arising out of the use of this material.

A qualified person is one who has skills and knowledge related to the construction, installation, and operation of electrical equipment and has received safety training to recognize and avoid the hazards involved.

Per IEC 62040-1: "Uninterruptible power systems (UPS) -- Part 1: Safety Requirements," this equipment, including battery access, must be inspected, installed and maintained by a skilled person.

The skilled person is a person with relevant education and experience to enable him or her to perceive risks and to avoid hazards which the equipment can create (reference IEC 62040-1, section 3.102).

Electromagnetic Compatibility

NOTICE

RISK OF ELECTROMAGNETIC DISTURBANCE

This is a product Category C3 according to IEC 62040-2. This is a product for commercial and industrial applications in the second environment - installation restrictions or additional measures may be needed to prevent disturbances. The second environment includes all commercial, light industry, and industrial locations other than residential, commercial, and light industrial premises directly connected without intermediate transformer to a public low-voltage mains supply. The installation and cabling must follow the electromagnetic compatibility rules, e.g.:

- the segregation of cables,
- the use of shielded or special cables when relevant,
- the use of grounded metallic cable tray and supports.

Failure to follow these instructions can result in equipment damage.

Safety Precautions

⚠DANGER

HAZARD OF ELECTRIC SHOCK, EXPLOSION, OR ARC FLASH

All safety instructions in this document must be read, understood and followed.

Failure to follow these instructions will result in death or serious injury.

⚠DANGER

HAZARD OF ELECTRIC SHOCK, EXPLOSION, OR ARC FLASH

Read all instructions in the Installation Manual before installing or working on this UPS system.

Failure to follow these instructions will result in death or serious injury.

⚠DANGER

HAZARD OF ELECTRIC SHOCK, EXPLOSION, OR ARC FLASH

Do not install the UPS system until all construction work has been completed and the installation room has been cleaned.

Failure to follow these instructions will result in death or serious injury.

⚠ DANGER

HAZARD OF ELECTRIC SHOCK, EXPLOSION, OR ARC FLASH

- The product must be installed according to the specifications and requirements as defined by Schneider Electric. It concerns in particular the external and internal protections (upstream disconnect devices, battery disconnect devices, cabling, etc.) and environmental requirements. No responsibility is assumed by Schneider Electric if these requirements are not respected.
- After the UPS system has been electrically wired, do not start up the system. Start-up must only be performed by Schneider Electric.

Failure to follow these instructions will result in death or serious injury.

⚠ DANGER

HAZARD OF ELECTRIC SHOCK, EXPLOSION, OR ARC FLASH

The UPS system must be installed according to local and national regulations. Install the UPS according to:

- IEC 60364 (including 60364–4–41- protection against electric shock, 60364–4–42 - protection against thermal effect, and 60364–4–43 - protection against overcurrent), **or**
- NEC NFPA 70, **or**
- Canadian Electrical Code (C22.1, Part 1)

depending on which one of the standards apply in your local area.

Failure to follow these instructions will result in death or serious injury.

⚠ DANGER

HAZARD OF ELECTRIC SHOCK, EXPLOSION, OR ARC FLASH

- Install the UPS system in a temperature controlled indoor environment free of conductive contaminants and humidity.
- Install the UPS system on a non-flammable, level and solid surface (e.g. concrete) that can support the weight of the system.

Failure to follow these instructions will result in death or serious injury.

⚠ DANGER

HAZARD OF ELECTRIC SHOCK, EXPLOSION, OR ARC FLASH

The UPS is not designed for and must therefore not be installed in the following unusual operating environments:

- Damaging fumes
- Explosive mixtures of dust or gases, corrosive gases, or conductive or radiant heat from other sources
- Moisture, abrasive dust, steam or in an excessively damp environment
- Fungus, insects, vermin
- Salt-laden air or contaminated cooling refrigerant
- Pollution degree higher than 2 according to IEC 60664-1
- Exposure to abnormal vibrations, shocks, and tilting
- Exposure to direct sunlight, heat sources, or strong electromagnetic fields

Failure to follow these instructions will result in death or serious injury.

⚠DANGER

HAZARD OF ELECTRIC SHOCK, EXPLOSION, OR ARC FLASH

Do not drill or cut holes for cables or conduits with the gland plates installed and do not drill or cut holes in close proximity to the UPS.

Failure to follow these instructions will result in death or serious injury.

⚠DANGER

HAZARD OF ELECTRIC SHOCK, EXPLOSION, OR ARC FLASH

Do not make mechanical changes to the product (including removal of cabinet parts or drilling/cutting of holes) that are not described in the Installation Manual.

Failure to follow these instructions will result in death or serious injury.

NOTICE

RISK OF OVERHEATING

Respect the space requirements around the UPS system and do not cover the product's ventilation openings when the UPS system is in operation.

Failure to follow these instructions can result in equipment damage.

NOTICE

RISK OF EQUIPMENT DAMAGE

Do not connect the UPS output to regenerative load systems including photovoltaic systems and speed drives.

Failure to follow these instructions can result in equipment damage.

Additional Safety Precautions After Installation

⚠⚠DANGER

HAZARD OF ELECTRIC SHOCK, EXPLOSION, OR ARC FLASH

Do not install the UPS system until all construction work has been completed and the installation room has been cleaned. If additional construction work is needed in the installation room after this product has been installed, turn off the product and cover the product with the protective packaging bag the product was delivered in.

Failure to follow these instructions will result in death or serious injury.

Electrical Safety

This manual contains important safety instructions that should be followed during the installation and maintenance of the UPS system.

⚠⚠DANGER

HAZARD OF ELECTRIC SHOCK, EXPLOSION, OR ARC FLASH

- Electrical equipment must be installed, operated, serviced, and maintained only by qualified personnel.
- Apply appropriate personal protective equipment (PPE) and follow safe electrical work practices.
- Disconnection devices for AC and DC must be provided by others, be readily accessible, and the function of the disconnect device marked for its function.
- Turn off all power supplying the UPS system before working on or inside the equipment.
- Before working on the UPS system, check for hazardous voltage between all terminals including the protective earth.
- The UPS contains an internal energy source. Hazardous voltage can be present even when disconnected from the mains supply. Before installing or servicing the UPS system, ensure that the units are OFF and that mains and batteries are disconnected. Wait five minutes before opening the UPS to allow the capacitors to discharge.
- The UPS must be properly earthed/grounded and due to a high touch current/leakage current, the earthing/grounding conductor must be connected first.

Failure to follow these instructions will result in death or serious injury.

The label below (TME37744, one label is provided) must be added because backfeed protection is provided external to the equipment. See Backfeed Protection, page 106 for more details. The label must be placed adjacent to all upstream power disconnection devices.
The label below must also be added if the UPS input is connected through external isolators that, when opened, isolate the neutral. The label must be placed adjacent to all upstream power disconnection devices that isolate the neutral.

⚠⚠DANGER

HAZARD OF ELECTRIC SHOCK, EXPLOSION, OR ARC FLASH

Risk of voltage backfeed. Before working on this circuit: Isolate the UPS and check for hazardous voltage between all terminals including the protective earth.

Failure to follow these instructions will result in death or serious injury.

⚠⚠DANGER

HAZARD OF ELECTRIC SHOCK, EXPLOSION, OR ARC FLASH

Always perform correct Lockout/Tagout before working on the UPS. A UPS with autostart enabled will automatically restart when the mains supply returns.

Failure to follow these instructions will result in death or serious injury.

⚠⚠DANGER

HAZARD OF ELECTRIC SHOCK, EXPLOSION, OR ARC FLASH

This product can cause a DC current in the PE conductor. Where a residual current-operated protective device (RCD) is used for protection against electrical shock, only an RCD of Type B is allowed on the supply side of this product.

Failure to follow these instructions will result in death or serious injury.

Battery Safety

⚠⚠DANGER

HAZARD OF ELECTRIC SHOCK, EXPLOSION, OR ARC FLASH

- Battery disconnect devices must be installed according to the specifications and requirements as defined by Schneider Electric.
- Servicing of batteries must only be performed or supervised by qualified personnel knowledgeable of batteries and the required precautions. Keep unqualified personnel away from batteries.
- Disconnect charging source prior to connecting or disconnecting battery terminals.
- Do not dispose of batteries in a fire as they can explode.
- Do not open, alter, or mutilate batteries. Released electrolyte is harmful to the skin and eyes. It may be toxic.

Failure to follow these instructions will result in death or serious injury.

⚠⚠DANGER

HAZARD OF ELECTRIC SHOCK, EXPLOSION, OR ARC FLASH

Batteries can present a risk of electric shock and high short-circuit current. The following precautions must be observed when working on batteries

- Remove watches, rings, or other metal objects.
- Use tools with insulated handles.
- Wear protective glasses, gloves and boots.
- Do not lay tools or metal parts on top of batteries.
- Disconnect the charging source prior to connecting or disconnecting battery terminals.
- Determine if the battery is inadvertently grounded. If inadvertently grounded, remove source from ground. Contact with any part of a grounded battery can result in electric shock. The likelihood of such shock can be reduced if such grounds are removed during installation and maintenance (applicable to equipment and remote battery supplies not having a grounded supply circuit).

Failure to follow these instructions will result in death or serious injury.

⚠⚠DANGER

HAZARD OF ELECTRIC SHOCK, EXPLOSION, OR ARC FLASH

When replacing batteries, always replace with the same type and number of batteries or battery packs.

Failure to follow these instructions will result in death or serious injury.

⚠ CAUTION

RISK OF EQUIPMENT DAMAGE

- Mount the batteries in the UPS system, but do not connect the batteries until the UPS system is ready to be powered up. The time duration from battery connection until the UPS system is powered up must not exceed 72 hours or 3 days.
- Batteries must not be stored more than six months due to the requirement of recharging. If the UPS system remains de-energized for a long period, we recommend that you energize the UPS system for a period of 24 hours at least once every month. This charges the batteries, thus avoiding irreversible damage.

Failure to follow these instructions can result in injury or equipment damage.

NOTE: Always follow the documentation from the battery manufacturer concerning battery storage, battery installation, and battery maintenance.

Cybersecurity and Physical Security Recommendations

Install the Product in a Secure Location

Custodians should secure products from unauthorized physical access.

- Access should be restricted to those who require access to maintain the product.
- Restricted areas should be clearly marked for authorized personnel only.
- Restricted areas should be secured by locked doors.
- Access to the restricted areas should produce a physical or electronic audit trail.

Secure Access to the User Interface and Communication Ports of the Product

Install the product in a rack or cage that can be locked with a suitable key, or other physical methods. This will prevent access to the user interface and the physical communication ports of the product.

Description of Risk

Attackers with physical access to the product can access the equipment without authorization.

Recommendations

Physical security must be in place to control physical access to restricted areas and facilities containing the product. The product should be located under lock and key or protected by physical restraints that prevent unauthorized access or removal from restricted areas. Access to areas containing the product should only be granted to personnel who require access based on their job function.

Restricted areas should display signs that clearly indicate access is for authorized personnel only. Facilities containing the product should give minimum indication of their purpose, with no obvious signs identifying the presence of related functions.

Physical access control devices, such as key card readers, doors and cabinet locks, should be tested prior to use and on a periodic basis (e.g. annually). Resource custodians should produce physical or electronic audit trails to record all personnel's physical access to restricted areas for security incident investigation. Inventory of who has physical access to control devices should be regularly reviewed, and any inappropriate access identified during the review should be promptly removed.

Firmware Updates

Schneider Electric strongly recommends that you review the security bulletins that relate to your Schneider Electric product.

For information on new and updated security bulletins, visit the **Schneider Electric Security Bulletins web page**.

Symbols Used in the Product

	This is the earthing/ground symbol.
	This is the protective earth/equipment grounding conductor symbol.
	This is the direct current symbol. It is also referred to as DC.
	This is the alternating current symbol. It is also referred to as AC.
	This is the positive polarity symbol. It is used to identify the positive terminal(s) of equipment which is used with, or generates direct current.
	This is the negative polarity symbol. It is used to identify the negative terminal(s) of equipment which is used with, or generates direct current.
	This is the battery symbol.
	This is the static switch symbol. It is used to indicate switches that are designed to connect or disconnect the load to or from the supply respectively without the existence of moving parts.
	This is the AC/DC converter (rectifier) symbol. It is used to identify an AC/DC converter (rectifier) and, in case of plug-in devices, to identify the relevant receptacles.
	This is the DC/AC converter (inverter) symbol. It is used to identify an DC/AC converter (inverter) and, in case of plug-in devices, to identify the relevant receptacles.

Specifications

Specifications for 500 kW UPS

	Voltage (V)	380	400	415
Input	Connections	4-wire (L1, L2, L3, N, PE)(1) or 3-wire (L1, L2, L3, PE)(2)		
	Input voltage range (V)	At 100% load: 323-437	At 100% load: 340-460	At 100% load: 353-478
	Frequency range (Hz)	40-70		
	Nominal input current (A)	785	746	719
	Maximum input current (A)	951	931	898
	Input current limitation (A)	951	931	898
	Minimum short circuit rating	Dependent on upstream protection. See Upstream and Downstream Protection for 380/400/415 V (IEC), page 41 for details.		
	Maximum short circuit rating	100 kA Icc 65 kA Icc with backfeed protection cabinet (GVXLOPT001)		
	Total harmonic distortion (THDI)	<3% at full linear load (symmetrical)		
	Input power factor	>0.99 at load >25% >0.95 at load >15%		
	Protection	Built-in backfeed relay and fuses		
	Ramp-in	Programmable and adaptive: 1-300 seconds		
Bypass	Connections	4-wire (L1, L2, L3, N, PE) or 3-wire (L1, L2, L3, PE)		
	Bypass voltage range (V)	342-418	360-440	374-457
	Frequency (Hz)	50 or 60		
	Frequency range (Hz)	±1, ±3, ±10 (user selectable)		
	Nominal bypass current (A)	768	729	703
	Minimum short circuit rating	Dependent on upstream protection. See Upstream and Downstream Protection for 380/400/415 V (IEC), page 41 for details.		
	Maximum short circuit rating	100 kA Icw 65 kA Icc with backfeed protection cabinet (GVXLOPT001)		
	I^2t thyristor value (A^2s)	14.6 x 10^6		
	Input fuse (A^2s)	No		
	Backfeed protection	1: Upstream installation of disconnect device with shunt trip connected to the UPS, OR 2: Installation with backfeed protection cabinet (GVXLOPT001)		

(1) Note: Refer to the earthing diagrams for your specific earthing system requirements concerning the N connection.
(2) Corner (line) grounding is not permitted.

	Voltage (V)	380	400	415
Output	Connections[3]	4-wire (L1, L2, L3, N, PE) or 3-wire (L1, L2, L3, PE)		
	Output voltage regulation	Symmetrical load ± 1% Asymmetrical load ± 3%		
	Overload capacity	Normal operation[4]: 150% for 1 minute, 125% for 10 minutes, 112% continuous[5] Battery operation: 110% for 1 minute Bypass operation: 150% for 1 minute, 125% for 10 minutes, 110% continuous (in forced bypass operation or requested bypass operation)		
	Output power factor	1		
	Nominal output current (A)	760	722	696
	Minimum short circuit rating	Dependent on upstream protection. See Upstream and Downstream Protection for 380/400/415 V (IEC), page 41 for details.		
	Maximum short circuit rating	100 kA Icw 65 kA Icc with backfeed protection cabinet (GVXLOPT001)		
	Inverter output short circuit capabilities	Varies with time. See graph and table values in Inverter Short Circuit Capabilities (Bypass not Available), page 49.		
	Output short circuit current (inverter) (A)[6]	1730	1650	1580
	Output frequency (Hz)	50/60 Hz bypass synchronized; 50/60 Hz ±0.1% free running		
	Synchronized slew rate (Hz/sec)	Programmable to 0.25, 0.5, 1, 2, 4, 6		
	Total harmonic distortion (THDU)	<1% for 100% resistive load <5% for non-linear load		
	Output voltage compensation	Programmable to 0%, ±1%, ±2%, ±3%		
	Output performance classification (according to IEC/ EN62040-3)	VFI SS 11		
	Load crest factor	3		
	Load power factor	From 0.5 leading to 0.5 lagging without any derating		

(3) The number of output connections must match the number of input connections in a single mains system. The number of output connections must match the number of bypass connections in a dual mains system.
(4) At 50 °C ambient temperature, the UPS can support 75% continuous load in normal operation at nominal mains voltage. All other overload scenarios here are at maximum 40 °C ambient temperature.
(5) 112% continuous overload in normal operation at nominal mains voltage and at maximum 40 °C ambient temperature. Contact Schneider Electric to enable this function. 112% overload is not supported in battery operation and this feature cannot be used to undersize the UPS as there is a risk of load drop if the UPS is transferred to battery operation.
(6) The output short circuit current (inverter) is based on IK1 and IK2 at 10 ms.

	Voltage (V)	380	400	415
Battery	Charging power in % of output power	0-75% load: 40% 75-100% load: 40% to 15% 100% load: 15%	At 0-80% load: 40% At 80-100% load: 40% to 20% At 100% load: 20%	
	Maximum charging power (kW) (at 100% load)	75	100	100
	Maximum charging power (kW) (at 0% load)	200	200	200
	Number of battery blocks	40-48		
	Nominal battery voltage (VDC)	480 for 40 battery blocks 576 for 48 battery blocks		
	Nominal float voltage (VDC)	545 for 40 battery blocks 654 for 48 battery blocks		
	Maximum boost voltage (VDC)	571 for 40 battery blocks 685 for 48 battery blocks		
	Maximum charge current (A)	420		
	Temperature compensation (per cell)	-3.3mV/°C/cell for T ≥ 25 °C, 0mV/°C/cell for T < 25 °C		
	End of discharge voltage (full load) (VDC)	384-461		
	End of discharge voltage (no load) (VDC)	420-504		
	Battery current at full load and nominal battery voltage (A)	1083		
	Battery current at full load and minimum battery voltage (A)	1354		
	Ripple current	< 5% C20 (5 min backup time)		
	Battery test	Manual/automatic (selectable)		
	Maximum short circuit rating	100 kA		

NOTE: Battery specifications are based on VRLA batteries.

Specifications for 600 kW UPS

NOTE: 600 kW rating is only available for GVXL600K600HS.

	Voltage (V)	**380**	**400**	**415**
Input	Connections	4-wire (L1, L2, L3, N, PE)(7) or 3-wire (L1, L2, L3, PE)(8)		
	Input voltage range (V)	At 100% load: 323-437	At 100% load: 340-460	At 100% load: 353-478
	Frequency range (Hz)	40-70		
	Nominal input current (A)	942	895	863
	Maximum input current (A)	1189	1163	1122
	Input current limitation (A)	1189	1163	1122
	Minimum short circuit rating	Dependent on upstream protection. See Upstream and Downstream Protection for 380/400/415 V (IEC), page 41 for details.		
	Maximum short circuit rating	100 kA Icc 65 kA Icc with backfeed protection cabinet (GVXLOPT001)		
	Total harmonic distortion (THDI)	<3% at full linear load (symmetrical)		
	Input power factor	>0.99 at load >25% >0.95 at load >15%		
	Protection	Built-in backfeed relay and fuses		
	Ramp-in	Programmable and adaptive: 1-300 seconds		
Bypass	Connections	4-wire (L1, L2, L3, N, PE) or 3-wire (L1, L2, L3, PE)		
	Bypass voltage range (V)	342-418	360-440	374-457
	Frequency (Hz)	50 or 60		
	Frequency range (Hz)	±1, ±3, ±10 (user selectable)		
	Nominal bypass current (A)	921	875	844
	Minimum short circuit rating	Dependent on upstream protection. See Upstream and Downstream Protection for 380/400/415 V (IEC), page 41 for details.		
	Maximum short circuit rating	100 kA Icw 65 kA Icc with backfeed protection cabinet (GVXLOPT001)		
	I^2t thyristor value (A^2s)	14.6 x 10^6		
	Input fuse (A^2s)	No		
	Backfeed protection	1: Upstream installation of disconnect device with shunt trip connected to the UPS, OR 2: Installation with backfeed protection cabinet (GVXLOPT001)		

(7) Note: Refer to the earthing diagrams for your specific earthing system requirements concerning the N connection.
(8) Corner (line) grounding is not permitted.

	Voltage (V)	380	400	415
Output	Connections[9]	4-wire (L1, L2, L3, N, PE) or 3-wire (L1, L2, L3, PE)		
	Output voltage regulation	Symmetrical load ± 1% Asymmetrical load ± 3%		
	Overload capacity	Normal operation[10]: 150% for 1 minute, 125% for 10 minutes, 112% continuous[11] Battery operation: 110% for 1 minute Bypass operation: 150% for 1 minute, 125% for 10 minutes, 110% continuous (in forced bypass operation or requested bypass operation)		
	Output power factor	1		
	Nominal output current (A)	912	867	835
	Minimum short circuit rating	Dependent on upstream protection. See Upstream and Downstream Protection for 380/400/415 V (IEC), page 41 for details.		
	Maximum short circuit rating	100 kA Icw 65 kA Icc with backfeed protection cabinet (GVXLOPT001)		
	Inverter output short circuit capabilities	Varies with time. See graph and table values in Inverter Short Circuit Capabilities (Bypass not Available), page 49.		
	Output short circuit current (inverter) (A)[12]	2160	2060	1970
	Output frequency (Hz)	50/60 Hz bypass synchronized; 50/60 Hz ±0.1% free running		
	Synchronized slew rate (Hz/sec)	Programmable to 0.25, 0.5, 1, 2, 4, 6		
	Total harmonic distortion (THDU)	<1% for 100% resistive load <5% for non-linear load		
	Output voltage compensation	Programmable to 0%, ±1%, ±2%, ±3%		
	Output performance classification (according to IEC/ EN62040-3)	VFI SS 11		
	Load crest factor	3		
	Load power factor	From 0.5 leading to 0.5 lagging without any derating		

(9) The number of output connections must match the number of input connections in a single mains system. The number of output connections must match the number of bypass connections in a dual mains system.
(10) At 50 °C ambient temperature, the UPS can support 75% continuous load in normal operation at nominal mains voltage. All other overload scenarios here are at maximum 40 °C ambient temperature.
(11) 112% continuous overload in normal operation at nominal mains voltage and at maximum 40 °C ambient temperature. Contact Schneider Electric to enable this function. 112% overload is not supported in battery operation and this feature cannot be used to undersize the UPS as there is a risk of load drop if the UPS is transferred to battery operation.
(12) The output short circuit current (inverter) is based on IK1 and IK2 at 10 ms.

	Voltage (V)	380	400	415
Battery	Charging power in % of output power	0-75% load: 40% 75-100% load: 40% to 15% 100% load: 15%	At 0-80% load: 40% At 80-100% load: 40% to 20% At 100% load: 20%	
	Maximum charging power (kW) (at 100% load)	90	120	120
	Maximum charging power (kW) (at 0% load)	240	240	240
	Number of battery blocks	40-48		
	Nominal battery voltage (VDC)	480 for 40 battery blocks 576 for 48 battery blocks		
	Nominal float voltage (VDC)	545 for 40 battery blocks 654 for 48 battery blocks		
	Maximum boost voltage (VDC)	571 for 40 battery blocks 685 for 48 battery blocks		
	Maximum charge current (A)	525		
	Temperature compensation (per cell)	-3.3mV/°C/cell for T ≥ 25 °C, 0mV/°C/cell for T < 25 °C		
	End of discharge voltage (full load) (VDC)	384-461		
	End of discharge voltage (no load) (VDC)	420-504		
	Battery current at full load and nominal battery voltage (A)	1300		
	Battery current at full load and minimum battery voltage (A)	1625		
	Ripple current	< 5% C20 (5 min backup time)		
	Battery test	Manual/automatic (selectable)		
	Maximum short circuit rating	100 kA		

NOTE: Battery specifications are based on VRLA batteries.

Specifications for 625 kW UPS

	Voltage (V)	380	400	415
Input	Connections	4-wire (L1, L2, L3, N, PE)(13) or 3-wire (L1, L2, L3, PE)(14)		
	Input voltage range (V)	At 100% load: 323-437	At 100% load: 340-460	At 100% load: 353-478
	Frequency range (Hz)	40-70		
	Nominal input current (A)	981	932	899
	Maximum input current (A)	1189	1163	1122
	Input current limitation (A)	1189	1163	1122
	Minimum short circuit rating	Dependent on upstream protection. See Upstream and Downstream Protection for 380/400/415 V (IEC), page 41 for details.		
	Maximum short circuit rating	100 kA Icc 65 kA Icc with backfeed protection cabinet (GVXLOPT001)		
	Total harmonic distortion (THDI)	<3% at full linear load (symmetrical)		
	Input power factor	>0.99 at load >25% >0.95 at load >15%		
	Protection	Built-in backfeed relay and fuses		
	Ramp-in	Programmable and adaptive: 1-300 seconds		
Bypass	Connections	4-wire (L1, L2, L3, N, PE) or 3-wire (L1, L2, L3, PE)		
	Bypass voltage range (V)	342-418	360-440	374-457
	Frequency (Hz)	50 or 60		
	Frequency range (Hz)	±1, ±3, ±10 (user selectable)		
	Nominal bypass current (A)	960	912	879
	Minimum short circuit rating	Dependent on upstream protection. See Upstream and Downstream Protection for 380/400/415 V (IEC), page 41 for details.		
	Maximum short circuit rating	100 kA Icw 65 kA Icc with backfeed protection cabinet (GVXLOPT001)		
	I^2t thyristor value (A^2s)	14.6 x 10^6		
	Input fuse (A^2s)	No		
	Backfeed protection	1: Upstream installation of disconnect device with shunt trip connected to the UPS, OR 2: Installation with backfeed protection cabinet (GVXLOPT001)		

(13) Note: Refer to the earthing diagrams for your specific earthing system requirements concerning the N connection.
(14) Corner (line) grounding is not permitted.

	Voltage (V)	380	400	415
Output	Connections[15]	4-wire (L1, L2, L3, N, PE) or 3-wire (L1, L2, L3, PE)		
	Output voltage regulation	Symmetrical load ± 1% Asymmetrical load ± 3%		
	Overload capacity	Normal operation[16]: 150% for 1 minute, 125% for 10 minutes, 112% continuous[17] Battery operation: 110% for 1 minute Bypass operation: 150% for 1 minute, 125% for 10 minutes, 110% continuous (in forced bypass operation or requested bypass operation)		
	Output power factor	1		
	Nominal output current (A)	950	903	870
	Minimum short circuit rating	Dependent on upstream protection. See Upstream and Downstream Protection for 380/400/415 V (IEC), page 41 for details.		
	Maximum short circuit rating	100 kA Icw 65 kA Icc with backfeed protection cabinet (GVXLOPT001)		
	Inverter output short circuit capabilities	Varies with time. See graph and table values in Inverter Short Circuit Capabilities (Bypass not Available), page 49.		
	Output short circuit current (inverter) (A)[18]	2160	2060	1970
	Output frequency (Hz)	50/60 Hz bypass synchronized; 50/60 Hz ±0.1% free running		
	Synchronized slew rate (Hz/sec)	Programmable to 0.25, 0.5, 1, 2, 4, 6		
	Total harmonic distortion (THDU)	<1% for 100% resistive load <5% for non-linear load		
	Output voltage compensation	Programmable to 0%, ±1%, ±2%, ±3%		
	Output performance classification (according to IEC/ EN62040-3)	VFI SS 11		
	Load crest factor	3		
	Load power factor	From 0.5 leading to 0.5 lagging without any derating		

(15) The number of output connections must match the number of input connections in a single mains system. The number of output connections must match the number of bypass connections in a dual mains system.
(16) At 50 °C ambient temperature, the UPS can support 75% continuous load in normal operation at nominal mains voltage. All other overload scenarios here are at maximum 40 °C ambient temperature.
(17) 112% continuous overload in normal operation at nominal mains voltage and at maximum 40 °C ambient temperature. Contact Schneider Electric to enable this function. 112% overload is not supported in battery operation and this feature cannot be used to undersize the UPS as there is a risk of load drop if the UPS is transferred to battery operation.
(18) The output short circuit current (inverter) is based on IK1 and IK2 at 10 ms.

	Voltage (V)	380	400	415
Battery	Charging power in % of output power	0-75% load: 40% 75-100% load: 40% to 15% 100% load: 15%	At 0-80% load: 40% At 80-100% load: 40% to 20% At 100% load: 20%	
	Maximum charging power (kW) (at 100% load)	94	125	125
	Maximum charging power (kW) (at 0% load)	250	250	250
	Number of battery blocks	40-48		
	Nominal battery voltage (VDC)	480 for 40 battery blocks 576 for 48 battery blocks		
	Nominal float voltage (VDC)	545 for 40 battery blocks 654 for 48 battery blocks		
	Maximum boost voltage (VDC)	571 for 40 battery blocks 685 for 48 battery blocks		
	Maximum charge current (A)	525		
	Temperature compensation (per cell)	-3.3mV/°C/cell for T ≥ 25 °C, 0mV/°C/cell for T < 25 °C		
	End of discharge voltage (full load) (VDC)	384-461		
	End of discharge voltage (no load) (VDC)	420-504		
	Battery current at full load and nominal battery voltage (A)	1354		
	Battery current at full load and minimum battery voltage (A)	1692		
	Ripple current	< 5% C20 (5 min backup time)		
	Battery test	Manual/automatic (selectable)		
	Maximum short circuit rating	100 kA		

NOTE: Battery specifications are based on VRLA batteries.

Specifications for 750 kW UPS

	Voltage (V)	380	400	415
Input	Connections	4-wire (L1, L2, L3, N, PE)(19) or 3-wire (L1, L2, L3, PE)(20)		
	Input voltage range (V)	At 100% load: 323-437	At 100% load: 340-460	At 100% load: 353-478
	Frequency range (Hz)	40-70		
	Nominal input current (A)	1178	1119	1078
	Maximum input current (A)	1426	1396	1347
	Input current limitation (A)	1426	1396	1347
	Minimum short circuit rating	Dependent on upstream protection. See Upstream and Downstream Protection for 380/400/415 V (IEC), page 41 for details.		
	Maximum short circuit rating	100 kA Icc 65 kA Icc with backfeed protection cabinet (GVXLOPT001)		
	Total harmonic distortion (THDI)	<3% at full linear load (symmetrical)		
	Input power factor	>0.99 at load >25% >0.95 at load >15%		
	Protection	Built-in backfeed relay and fuses		
	Ramp-in	Programmable and adaptive: 1-300 seconds		
Bypass	Connections	4-wire (L1, L2, L3, N, PE) or 3-wire (L1, L2, L3, PE)		
	Bypass voltage range (V)	342-418	360-440	374-457
	Frequency (Hz)	50 or 60		
	Frequency range (Hz)	±1, ±3, ±10 (user selectable)		
	Nominal bypass current (A)	1152	1094	1054
	Minimum short circuit rating	Dependent on upstream protection. See Upstream and Downstream Protection for 380/400/415 V (IEC), page 41 for details.		
	Maximum short circuit rating	100 kA Icw 65 kA Icc with backfeed protection cabinet (GVXLOPT001)		
	I^2t thyristor value (A^2s)	14.6 x 10^6		
	Input fuse (A^2s)	No		
	Backfeed protection	1: Upstream installation of disconnect device with shunt trip connected to the UPS, OR 2: Installation with backfeed protection cabinet (GVXLOPT001)		

(19) Note: Refer to the earthing diagrams for your specific earthing system requirements concerning the N connection.
(20) Corner (line) grounding is not permitted.

	Voltage (V)	380	400	415
Output	Connections[21]	4-wire (L1, L2, L3, N, PE) or 3-wire (L1, L2, L3, PE)		
	Output voltage regulation	Symmetrical load ± 1% Asymmetrical load ± 3%		
	Overload capacity	Normal operation[22]: 150% for 1 minute, 125% for 10 minutes, 112% continuous[23] Battery operation: 110% for 1 minute Bypass operation: 150% for 1 minute, 125% for 10 minutes, 110% continuous (in forced bypass operation or requested bypass operation)		
	Output power factor	1		
	Nominal output current (A)	1140	1083	1044
	Minimum short circuit rating	Dependent on upstream protection. See Upstream and Downstream Protection for 380/400/415 V (IEC), page 41 for details.		
	Maximum short circuit rating	100 kA Icw 65 kA Icc with backfeed protection cabinet (GVXLOPT001)		
	Inverter output short circuit capabilities	Varies with time. See graph and table values in Inverter Short Circuit Capabilities (Bypass not Available), page 49.		
	Output short circuit current (inverter) (A)[24]	2590	2470	2360
	Output frequency (Hz)	50/60 Hz bypass synchronized; 50/60 Hz ±0.1% free running		
	Synchronized slew rate (Hz/sec)	Programmable to 0.25, 0.5, 1, 2, 4, 6		
	Total harmonic distortion (THDU)	<1% for 100% resistive load <5% for non-linear load		
	Output voltage compensation	Programmable to 0%, ±1%, ±2%, ±3%		
	Load crest factor	3		
	Load power factor	From 0.5 leading to 0.5 lagging without any derating		

(21) The number of output connections must match the number of input connections in a single mains system. The number of output connections must match the number of bypass connections in a dual mains system.
(22) At 50 °C ambient temperature, the UPS can support 75% continuous load in normal operation at nominal mains voltage. All other overload scenarios here are at maximum 40 °C ambient temperature.
(23) 112% continuous overload in normal operation at nominal mains voltage and at maximum 40 °C ambient temperature. Contact Schneider Electric to enable this function. 112% overload is not supported in battery operation and this feature cannot be used to undersize the UPS as there is a risk of load drop if the UPS is transferred to battery operation.
(24) The output short circuit current (inverter) is based on IK1 and IK2 at 10 ms.

	Voltage (V)	380	400	415
Battery	Charging power in % of output power	0-75% load: 40% 75-100% load: 40% to 15% 100% load: 15%	At 0-80% load: 40% At 80-100% load: 40% to 20% At 100% load: 20%	
	Maximum charging power (kW) (at 100% load)	113	150	150
	Maximum charging power (kW) (at 0% load)	300	300	300
	Number of battery blocks	40-48		
	Nominal battery voltage (VDC)	480 for 40 battery blocks 576 for 48 battery blocks		
	Nominal float voltage (VDC)	545 for 40 battery blocks 654 for 48 battery blocks		
	Maximum boost voltage (VDC)	571 for 40 battery blocks 685 for 48 battery blocks		
	Maximum charge current (A)	630		
	Temperature compensation (per cell)	-3.3mV/°C/cell for T ≥ 25 °C, 0mV/°C/cell for T < 25 °C		
	End of discharge voltage (full load) (VDC)	384-461		
	End of discharge voltage (no load) (VDC)	420-504		
	Battery current at full load and nominal battery voltage (A)	1625		
	Battery current at full load and minimum battery voltage (A)	2031		
	Ripple current	< 5% C20 (5 min backup time)		
	Battery test	Manual/automatic (selectable)		
	Maximum short circuit rating	100 kA		

NOTE: Battery specifications are based on VRLA batteries.

Specifications for 875 kW UPS

	Voltage (V)	380	400	415
Input	Connections	4-wire (L1, L2, L3, N, PE)(25) or 3-wire (L1, L2, L3, PE)(26)		
	Input voltage range (V)	At 100% load: 323-437	At 100% load: 340-460	At 100% load: 353-478
	Frequency range (Hz)	40-70		
	Nominal input current (A)	1374	1305	1258
	Maximum input current (A)	1664	1628	1571
	Input current limitation (A)	1664	1628	1571
	Minimum short circuit rating	Dependent on upstream protection. See Upstream and Downstream Protection for 380/400/415 V (IEC), page 41 for details.		
	Maximum short circuit rating	100 kA Icc 65 kA Icc with backfeed protection cabinet (GVXLOPT001)		
	Total harmonic distortion (THDI)	<3% at full linear load (symmetrical)		
	Input power factor	>0.99 at load >25% >0.95 at load >15%		
	Protection	Built-in backfeed relay and fuses		
	Ramp-in	Programmable and adaptive: 1-300 seconds		
Bypass	Connections	4-wire (L1, L2, L3, N, PE) or 3-wire (L1, L2, L3, PE)		
	Bypass voltage range (V)	342-418	360-440	374-457
	Frequency (Hz)	50 or 60		
	Frequency range (Hz)	±1, ±3, ±10 (user selectable)		
	Nominal bypass current (A)	1343	1276	1230
	Minimum short circuit rating	Dependent on upstream protection. See Upstream and Downstream Protection for 380/400/415 V (IEC), page 41 for details.		
	Maximum short circuit rating	100 kA Icw 65 kA Icc with backfeed protection cabinet (GVXLOPT001)		
	I^2t thyristor value (A^2s)	14.6 x 10^6		
	Input fuse (A^2s)	No		
	Backfeed protection	1: Upstream installation of disconnect device with shunt trip connected to the UPS, OR 2: Installation with backfeed protection cabinet (GVXLOPT001)		

(25) Note: Refer to the earthing diagrams for your specific earthing system requirements concerning the N connection.
(26) Corner (line) grounding is not permitted.

	Voltage (V)	380	400	415
Output	Connections[27]	4-wire (L1, L2, L3, N, PE) or 3-wire (L1, L2, L3, PE)		
	Output voltage regulation	Symmetrical load ± 1% Asymmetrical load ± 3%		
	Overload capacity	Normal operation[28]: 150% for 1 minute, 125% for 10 minutes, 112% continuous[29] Battery operation: 110% for 1 minute Bypass operation: 150% for 1 minute, 125% for 10 minutes, 110% continuous (in forced bypass operation or requested bypass operation)		
	Output power factor	1		
	Nominal output current (A)	1330	1263	1218
	Minimum short circuit rating	Dependent on upstream protection. See Upstream and Downstream Protection for 380/400/415 V (IEC), page 41 for details.		
	Maximum short circuit rating	100 kA Icw 65 kA Icc with backfeed protection cabinet (GVXLOPT001)		
	Inverter output short circuit capabilities	Varies with time. See graph and table values in Inverter Short Circuit Capabilities (Bypass not Available), page 49.		
	Output short circuit current (inverter) (A)[30]	3020	2880	2750
	Output frequency (Hz)	50/60 Hz bypass synchronized; 50/60 Hz ±0.1% free running		
	Synchronized slew rate (Hz/sec)	Programmable to 0.25, 0.5, 1, 2, 4, 6		
	Total harmonic distortion (THDU)	<1% for 100% resistive load <5% for non-linear load		
	Output voltage compensation	Programmable to 0%, ±1%, ±2%, ±3%		
	Load crest factor	3		
	Load power factor	From 0.5 leading to 0.5 lagging without any derating		

(27) The number of output connections must match the number of input connections in a single mains system. The number of output connections must match the number of bypass connections in a dual mains system.
(28) At 50 °C ambient temperature, the UPS can support 75% continuous load in normal operation at nominal mains voltage. All other overload scenarios here are at maximum 40 °C ambient temperature.
(29) 112% continuous overload in normal operation at nominal mains voltage and at maximum 40 °C ambient temperature. Contact Schneider Electric to enable this function. 112% overload is not supported in battery operation and this feature cannot be used to undersize the UPS as there is a risk of load drop if the UPS is transferred to battery operation.
(30) The output short circuit current (inverter) is based on IK1 and IK2 at 10 ms.

	Voltage (V)	380	400	415
Battery	Charging power in % of output power	0-75% load: 40% 75-100% load: 40% to 15% 100% load: 15%	At 0-80% load: 40% At 80-100% load: 40% to 20% At 100% load: 20%	
	Maximum charging power (kW) (at 100% load)	131	175	175
	Maximum charging power (kW) (at 0% load)	350	350	350
	Number of battery blocks	40-48		
	Nominal battery voltage (VDC)	480 for 40 battery blocks 576 for 48 battery blocks		
	Nominal float voltage (VDC)	545 for 40 battery blocks 654 for 48 battery blocks		
	Maximum boost voltage (VDC)	571 for 40 battery blocks 685 for 48 battery blocks		
	Maximum charge current (A)	735		
	Temperature compensation (per cell)	-3.3mV/°C/cell for T ≥ 25 °C, 0mV/°C/cell for T < 25 °C		
	End of discharge voltage (full load) (VDC)	384-461		
	End of discharge voltage (no load) (VDC)	420-504		
	Battery current at full load and nominal battery voltage (A)	1895		
	Battery current at full load and minimum battery voltage (A)	2369		
	Ripple current	< 5% C20 (5 min backup time)		
	Battery test	Manual/automatic (selectable)		
	Maximum short circuit rating	100 kA		

NOTE: Battery specifications are based on VRLA batteries.

Specifications for 1000 kW UPS

	Voltage (V)	380	400	415
Input	Connections	4-wire (L1, L2, L3, N, PE)(31) or 3-wire (L1, L2, L3, PE)(32)		
	Input voltage range (V)	At 100% load: 323-437	At 100% load: 340-460	At 100% load: 353-478
	Frequency range (Hz)	40-70		
	Nominal input current (A)	1570	1492	1438
	Maximum input current (A)	1902	1861	1796
	Input current limitation (A)	1902	1861	1796
	Minimum short circuit rating	Dependent on upstream protection. See Upstream and Downstream Protection for 380/400/415 V (IEC), page 41 for details.		
	Maximum short circuit rating	100 kA Icc 65 kA Icc with backfeed protection cabinet (GVXLOPT001)		
	Total harmonic distortion (THDI)	<3% at full linear load (symmetrical)		
	Input power factor	>0.99 at load >25% >0.95 at load >15%		
	Protection	Built-in backfeed relay and fuses		
	Ramp-in	Programmable and adaptive: 1-300 seconds		
Bypass	Connections	4-wire (L1, L2, L3, N, PE) or 3-wire (L1, L2, L3, PE)		
	Bypass voltage range (V)	342-418	360-440	374-457
	Frequency (Hz)	50 or 60		
	Frequency range (Hz)	±1, ±3, ±10 (user selectable)		
	Nominal bypass current (A)	1535	1458	1406
	Minimum short circuit rating	Dependent on upstream protection. See Upstream and Downstream Protection for 380/400/415 V (IEC), page 41 for details.		
	Maximum short circuit rating	100 kA Icw 65 kA Icc with backfeed protection cabinet (GVXLOPT001)		
	I^2t thyristor value (A^2s)	14.6 x 10^6		
	Input fuse (A^2s)	No		
	Backfeed protection	1: Upstream installation of disconnect device with shunt trip connected to the UPS, OR 2: Installation with backfeed protection cabinet (GVXLOPT001)		

(31) Note: Refer to the earthing diagrams for your specific earthing system requirements concerning the N connection.
(32) Corner (line) grounding is not permitted.

	Voltage (V)	380	400	415
Output	Connections[33]	4-wire (L1, L2, L3, N, PE) or 3-wire (L1, L2, L3, PE)		
	Output voltage regulation	Symmetrical load ± 1% Asymmetrical load ± 3%		
	Overload capacity	Normal operation[34]: 150% for 1 minute, 125% for 10 minutes, 112% continuous[35] Battery operation: 110% for 1 minute Bypass operation: 150% for 1 minute, 125% for 10 minutes, 110% continuous (in forced bypass operation or requested bypass operation)		
	Output power factor	1		
	Nominal output current (A)	1520	1444	1392
	Minimum short circuit rating	Dependent on upstream protection. See Upstream and Downstream Protection for 380/400/415 V (IEC), page 41 for details.		
	Maximum short circuit rating	100 kA Icw 65 kA Icc with backfeed protection cabinet (GVXLOPT001)		
	Inverter output short circuit capabilities	Varies with time. See graph and table values in Inverter Short Circuit Capabilities (Bypass not Available), page 49.		
	Output short circuit current (inverter) (A)[36]	3460	3290	3150
	Output frequency (Hz)	50/60 Hz bypass synchronized; 50/60 Hz ±0.1% free running		
	Synchronized slew rate (Hz/sec)	Programmable to 0.25, 0.5, 1, 2, 4, 6		
	Total harmonic distortion (THDU)	<1% for 100% resistive load <5% for non-linear load		
	Output voltage compensation	Programmable to 0%, ±1%, ±2%, ±3%		
	Load crest factor	3		
	Load power factor	From 0.5 leading to 0.5 lagging without any derating		

(33) The number of output connections must match the number of input connections in a single mains system. The number of output connections must match the number of bypass connections in a dual mains system.
(34) At 50 °C ambient temperature, the UPS can support 75% continuous load in normal operation at nominal mains voltage. All other overload scenarios here are at maximum 40 °C ambient temperature.
(35) 112% continuous overload in normal operation at nominal mains voltage and at maximum 40 °C ambient temperature. Contact Schneider Electric to enable this function. 112% overload is not supported in battery operation and this feature cannot be used to undersize the UPS as there is a risk of load drop if the UPS is transferred to battery operation.
(36) The output short circuit current (inverter) is based on IK1 and IK2 at 10 ms.

	Voltage (V)	380	400	415
Battery	Charging power in % of output power	0-75% load: 40% 75-100% load: 40% to 15% 100% load: 15%	At 0-80% load: 40% At 80-100% load: 40% to 20% At 100% load: 20%	
	Maximum charging power (kW) (at 100% load)	150	200	200
	Maximum charging power (kW) (at 0% load)	400	400	400
	Number of battery blocks	40-48		
	Nominal battery voltage (VDC)	480 for 40 battery blocks 576 for 48 battery blocks		
	Nominal float voltage (VDC)	545 for 40 battery blocks 654 for 48 battery blocks		
	Maximum boost voltage (VDC)	571 for 40 battery blocks 685 for 48 battery blocks		
	Maximum charge current (A)	840		
	Temperature compensation (per cell)	-3.3mV/°C/cell for T ≥ 25 °C, 0mV/°C/cell for T < 25 °C		
	End of discharge voltage (full load) (VDC)	384-461		
	End of discharge voltage (no load) (VDC)	420-504		
	Battery current at full load and nominal battery voltage (A)	2166		
	Battery current at full load and minimum battery voltage (A)	2708		
	Ripple current	< 5% C20 (5 min backup time)		
	Battery test	Manual/automatic (selectable)		
	Maximum short circuit rating	100 kA		

NOTE: Battery specifications are based on VRLA batteries.

Specifications for 1125 kW UPS

	Voltage (V)	380	400	415
Input	Connections	4-wire (L1, L2, L3, N, PE)(37) or 3-wire (L1, L2, L3, PE)(38)		
	Input voltage range (V)	At 100% load: 323-437	At 100% load: 340-460	At 100% load: 353-478
	Frequency range (Hz)	40-70		
	Nominal input current (A)	1766	1678	1617
	Maximum input current (A)	2139	2094	2020
	Input current limitation (A)	2139	2094	2020
	Minimum short circuit rating	Dependent on upstream protection. See Upstream and Downstream Protection for 380/400/415 V (IEC), page 41 for details.		
	Maximum short circuit rating	100 kA Icc 65 kA Icc with backfeed protection cabinet (GVXLOPT001)		
	Total harmonic distortion (THDI)	<3% at full linear load (symmetrical)		
	Input power factor	>0.99 at load >25% >0.95 at load >15%		
	Protection	Built-in backfeed relay and fuses		
	Ramp-in	Programmable and adaptive: 1-300 seconds		
Bypass	Connections	4-wire (L1, L2, L3, N, PE) or 3-wire (L1, L2, L3, PE)		
	Bypass voltage range (V)	342-418	360-440	374-457
	Frequency (Hz)	50 or 60		
	Frequency range (Hz)	±1, ±3, ±10 (user selectable)		
	Nominal bypass current (A)	1727	1641	1581
	Minimum short circuit rating	Dependent on upstream protection. See Upstream and Downstream Protection for 380/400/415 V (IEC), page 41 for details.		
	Maximum short circuit rating	100 kA Icw 65 kA Icc with backfeed protection cabinet (GVXLOPT001)		
	I^2t thyristor value (A^2s)	14.6 x 10^6		
	Input fuse (A^2s)	No		
	Backfeed protection	1: Upstream installation of disconnect device with shunt trip connected to the UPS, OR 2: Installation with backfeed protection cabinet (GVXLOPT001)		

(37) Note: Refer to the earthing diagrams for your specific earthing system requirements concerning the N connection.
(38) Corner (line) grounding is not permitted.

	Voltage (V)	380	400	415
Output	Connections[39]	4-wire (L1, L2, L3, N, PE) or 3-wire (L1, L2, L3, PE)		
	Output voltage regulation	Symmetrical load ± 1% Asymmetrical load ± 3%		
	Overload capacity	Normal operation[40]: 150% for 1 minute, 125% for 10 minutes, 112% continuous[41] Battery operation: 110% for 1 minute Bypass operation: 150% for 1 minute, 125% for 10 minutes, 110% continuous (in forced bypass operation or requested bypass operation)		
	Output power factor	1		
	Nominal output current (A)	1710	1624	1566
	Minimum short circuit rating	Dependent on upstream protection. See Upstream and Downstream Protection for 380/400/415 V (IEC), page 41 for details.		
	Maximum short circuit rating	100 kA Icw 65 kA Icc with backfeed protection cabinet (GVXLOPT001)		
	Inverter output short circuit capabilities	Varies with time. See graph and table values in Inverter Short Circuit Capabilities (Bypass not Available), page 49.		
	Output short circuit current (inverter) (A)[42]	3890	3700	3540
	Output frequency (Hz)	50/60 Hz bypass synchronized; 50/60 Hz ±0.1% free running		
	Synchronized slew rate (Hz/sec)	Programmable to 0.25, 0.5, 1, 2, 4, 6		
	Total harmonic distortion (THDU)	<1% for 100% resistive load <5% for non-linear load		
	Output voltage compensation	Programmable to 0%, ±1%, ±2%, ±3%		
	Load crest factor	3		
	Load power factor	From 0.5 leading to 0.5 lagging without any derating		

(39) The number of output connections must match the number of input connections in a single mains system. The number of output connections must match the number of bypass connections in a dual mains system.
(40) At 50 °C ambient temperature, the UPS can support 75% continuous load in normal operation at nominal mains voltage. All other overload scenarios here are at maximum 40 °C ambient temperature.
(41) 112% continuous overload in normal operation at nominal mains voltage and at maximum 40 °C ambient temperature. Contact Schneider Electric to enable this function. 112% overload is not supported in battery operation and this feature cannot be used to undersize the UPS as there is a risk of load drop if the UPS is transferred to battery operation.
(42) The output short circuit current (inverter) is based on IK1 and IK2 at 10 ms.

	Voltage (V)	380	400	415
Battery	Charging power in % of output power	0-75% load: 40% 75-100% load: 40% to 15% 100% load: 15%	At 0-80% load: 40% At 80-100% load: 40% to 20% At 100% load: 20%	
	Maximum charging power (kW) (at 100% load)	169	225	225
	Maximum charging power (kW) (at 0% load)	450	450	450
	Number of battery blocks	40-48		
	Nominal battery voltage (VDC)	480 for 40 battery blocks 576 for 48 battery blocks		
	Nominal float voltage (VDC)	545 for 40 battery blocks 654 for 48 battery blocks		
	Maximum boost voltage (VDC)	571 for 40 battery blocks 685 for 48 battery blocks		
	Maximum charge current (A)	945		
	Temperature compensation (per cell)	-3.3mV/°C/cell for T ≥ 25 °C, 0mV/°C/cell for T < 25 °C		
	End of discharge voltage (full load) (VDC)	384-461		
	End of discharge voltage (no load) (VDC)	420-504		
	Battery current at full load and nominal battery voltage (A)	2437		
	Battery current at full load and minimum battery voltage (A)	3046		
	Ripple current	< 5% C20 (5 min backup time)		
	Battery test	Manual/automatic (selectable)		
	Maximum short circuit rating	100 kA		

NOTE: Battery specifications are based on VRLA batteries.

Specifications for 1250 kW UPS

	Voltage (V)	380	400	415
Input	Connections	4-wire (L1, L2, L3, N, PE)(43) or 3-wire (L1, L2, L3, PE)(44)		
	Input voltage range (V)	At 100% load: 323-437	At 100% load: 340-460	At 100% load: 353-478
	Frequency range (Hz)	40-70		
	Nominal input current (A)	1962	1864	1797
	Maximum input current (A)	2377	2326	2244
	Input current limitation (A)	2377	2326	2244
	Minimum short circuit rating	Dependent on upstream protection. See Upstream and Downstream Protection for 380/400/415 V (IEC), page 41 for details.		
	Maximum short circuit rating	100 kA Icc 65 kA Icc with backfeed protection cabinet (GVXLOPT001)		
	Total harmonic distortion (THDI)	<3% at full linear load (symmetrical)		
	Input power factor	>0.99 at load >25% >0.95 at load >15%		
	Protection	Built-in backfeed relay and fuses		
	Ramp-in	Programmable and adaptive: 1-300 seconds		
Bypass	Connections	4-wire (L1, L2, L3, N, PE) or 3-wire (L1, L2, L3, PE)		
	Bypass voltage range (V)	342-418	360-440	374-457
	Frequency (Hz)	50 or 60		
	Frequency range (Hz)	±1, ±3, ±10 (user selectable)		
	Nominal bypass current (A)	1919	1823	1757
	Minimum short circuit rating	Dependent on upstream protection. See Upstream and Downstream Protection for 380/400/415 V (IEC), page 41 for details.		
	Maximum short circuit rating	100 kA Icw 65 kA Icc with backfeed protection cabinet (GVXLOPT001)		
	I^2t thyristor value (A^2s)	14.6 x 10^6		
	Input fuse (A^2s)	No		
	Backfeed protection	1: Upstream installation of disconnect device with shunt trip connected to the UPS, OR 2: Installation with backfeed protection cabinet (GVXLOPT001)		

(43) Note: Refer to the earthing diagrams for your specific earthing system requirements concerning the N connection.
(44) Corner (line) grounding is not permitted.

	Voltage (V)	380	400	415
Output	Connections[45]	4-wire (L1, L2, L3, N, PE) or 3-wire (L1, L2, L3, PE)		
	Output voltage regulation	Symmetrical load ± 1% Asymmetrical load ± 3%		
	Overload capacity	Normal operation[46]: 150% for 1 minute, 125% for 10 minutes, 112% continuous (the UPS has built-in redundancy so if a power module becomes inoperable, the remaining power modules can continue working in 112% overload in normal operation to support the full load until the inoperable power module can be replaced[47]). Battery operation: 110% for 1 minute Bypass operation: 150% for 1 minute, 125% for 10 minutes, 110% continuous (in forced bypass operation or requested bypass operation)		
	Output power factor	1		
	Nominal output current (A)	1900	1805	1740
	Minimum short circuit rating	Dependent on upstream protection. See Upstream and Downstream Protection for 380/400/415 V (IEC), page 41 for details.		
	Maximum short circuit rating	100 kA Icw 65 kA Icc with backfeed protection cabinet (GVXLOPT001)		
	Inverter output short circuit capabilities	Varies with time. See graph and table values in Inverter Short Circuit Capabilities (Bypass not Available), page 49.		
	Output short circuit current (inverter) (A)[48]	4320	4110	3930
	Output frequency (Hz)	50/60 Hz bypass synchronized; 50/60 Hz ±0.1% free running		
	Synchronized slew rate (Hz/sec)	Programmable to 0.25, 0.5, 1, 2, 4, 6		
	Total harmonic distortion (THDU)	<1% for 100% resistive load <5% for non-linear load		
	Output voltage compensation	Programmable to 0%, ±1%, ±2%, ±3%		
	Output performance classification (according to IEC/ EN62040-3)	VFI SS 11		
	Load crest factor	3		
	Load power factor	From 0.5 leading to 0.5 lagging without any derating		

(45) The number of output connections must match the number of input connections in a single mains system. The number of output connections must match the number of bypass connections in a dual mains system.
(46) At 50 °C ambient temperature, the UPS can support 75% continuous load in normal operation at nominal mains voltage. All other overload scenarios here are at maximum 40 °C ambient temperature.
(47) 112% continuous overload in normal operation at nominal mains voltage and at maximum 40 °C ambient temperature. Contact Schneider Electric to enable this function. 112% overload is not supported in battery operation and this feature cannot be used to undersize the UPS as there is a risk of load drop if the UPS is transferred to battery operation.
(48) The output short circuit current (inverter) is based on IK1 and IK2 at 10 ms.

	Voltage (V)	380	400	415
Battery	Charging power in % of output power	0-75% load: 40% 75-100% load: 40% to 15% 100% load: 15%	At 0-80% load: 40% At 80-100% load: 40% to 20% At 100% load: 20%	
	Maximum charging power (kW) (at 100% load)	188	250	250
	Maximum charging power (kW) (at 0% load)	500	500	500
	Number of battery blocks	40-48		
	Nominal battery voltage (VDC)	480 for 40 battery blocks 576 for 48 battery blocks		
	Nominal float voltage (VDC)	545 for 40 battery blocks 654 for 48 battery blocks		
	Maximum boost voltage (VDC)	571 for 40 battery blocks 685 for 48 battery blocks		
	Maximum charge current (A)	1050		
	Temperature compensation (per cell)	-3.3mV/°C/cell for T ≥ 25 °C, 0mV/°C/cell for T < 25 °C		
	End of discharge voltage (full load) (VDC)	384-461		
	End of discharge voltage (no load) (VDC)	420-504		
	Battery current at full load and nominal battery voltage (A)	2708		
	Battery current at full load and minimum battery voltage (A)	3384		
	Ripple current	< 5% C20 (5 min backup time)		
	Battery test	Manual/automatic (selectable)		
	Maximum short circuit rating	100 kA		

NOTE: Battery specifications are based on VRLA batteries.

Upstream and Downstream Protection for 380/400/415 V (IEC)

⚠⚠DANGER

HAZARD OF ELECTRIC SHOCK, EXPLOSION, OR ARC FLASH

- Circuit breakers must have instantaneous trip time of maximum 60 ms.
- Circuit breakers must have instantaneous override values set according to the table below.
- Circuit breakers must be installed for input (unit input disconnect device UIB) and bypass (static switch input disconnect device SSIB).
- For parallel system: Circuit breakers must be installed for the output (unit output disconnect device UOB) of each UPS. The unit output disconnect device (UOB) is sized as the static switch input disconnect device (SSIB).
- Live Swap is not supported for >100kA$_{bf}$ installations where current limiting disconnect devices are used to protect the UPS.

Failure to follow these instructions will result in death or serious injury.

Schneider Electric reserves the right to remove the Live Swap label from the product front if the conditions are not met.

NOTE: For local directives which require 4-pole circuit breakers: If neutral conductor is expected to carry a high current, due to line-neutral non-linear load, the circuit breaker must be rated according to expected neutral current.

NOTE: For local directives which require 4-pole circuit breakers: Refer to the earthing diagrams for details about neutral connection.

The bypass/output circuit breakers are sized based on the nominal current +10%. This is to accommodate either low grid voltage or deviation in length between parallel UPSs. The battery circuit breakers are sized based on end-of-discharge voltage which has been defined as 384 VDC.

Upstream Protection for 380/400/415 V (IEC) and Minimum Prospective Phase-To-Earth Short Circuit at the UPS Input/ Bypass Terminals

⚠⚠DANGER

HAZARD OF ELECTRIC SHOCK, EXPLOSION, OR ARC FLASH

The upstream overcurrent protective device (and its settings) must be sized to ensure a disconnecting time within 0.07 seconds in case of a short circuit between the input/bypass phase and the UPS enclosure.

Failure to follow these instructions will result in death or serious injury.

Compliance is assured with the recommended circuit breaker (and its settings) from the table below.

Recommended Upstream Protection for 380/400/415 V (IEC)

NOTE: Isd, Tr, I2t, and Ii must be set on the circuit breakers during start-up.

NOTE: For 112% continuous overload in normal operation: Contact Schneider Electric to enable this function and for specific circuit breaker settings.

UPS rating	**500 kW**						
	Input			**Bypass/Output**			**Battery**
Voltage (V)	**380**	**400**	**415**	**380**	**400**	**415**	**380-415**
Disconnect device type	MTZ2 10 H2 3P or 4P D/O or F +MIC 5.0X+_+			MTZ2 10 H2 3P or 4P D/O or F +MIC 5.0X+_+			MasterPacT NW20HDC-D MicroLogic 1.0 DC (48652+65273)
In	1000	1000	1000	1000	1000	1000	2000
Ir	951	931	898	845	802	774	–
Isd	1.5-10	1.5-10	1.5-10	1.5-10	1.5-10	1.5-10	–
Tr at 6 Ir	0.5-24	0.5-24	0.5-24	0.5-24	0.5-24	0.5-24	–
I2t	ON or OFF	ON or OFF	ON or OFF	ON or OFF	ON or OFF	ON or OFF	–
Ii (In)	2-15	2-15	2-15	2-15	2-15	2-15	2500

UPS rating	**600 kW**						
	Input			**Bypass/Output**			**Battery**
Voltage (V)	**380**	**400**	**415**	**380**	**400**	**415**	**380-415**
Disconnect device type	MTZ2 12 H2 3P or 4P D/O or F +MIC 5.0X+_+			MTZ2 12 H2 3P or 4P D/O or F +MIC 5.0X+_+	MTZ2 10 H2 3P or 4P D/O or F +MIC 5.0X+_+		MasterPacT NW20HDC-D MicroLogic 1.0 DC (48652+65273)
In	1250	1250	1250	1250	1000	1000	2000
Ir	1189	1163	1122	1014	963	929	–
Isd	1.5-10	1.5-10	1.5-10	1.5-10	1.5-10	1.5-10	–
Tr at 6 Ir	0.5-24	0.5-24	0.5-24	0.5-24	0.5-24	0.5-24	–
I2t	ON or OFF	ON or OFF	ON or OFF	ON or OFF	ON or OFF	ON or OFF	–
Ii (In)	2-15	2-15	2-15	2-15	2-15	2-15	2500

UPS rating	**625 kW**						
	Input			**Bypass/Output**			**Battery**
Voltage (V)	**380**	**400**	**415**	**380**	**400**	**415**	**380-415**
Disconnect device type	MTZ2 12 H2 3P or 4P D/O or F +MIC 5.0X+_+			MTZ2 12 H2 3P or 4P D/O or F +MIC 5.0X+_+	MTZ2 10 H2 3P or 4P D/O or F +MIC 5.0X+_+		MasterPacT NW20HDC-D MicroLogic 1.0 DC (48652+65273)
In	1250	1250	1250	1250	1000	1000	2000
Ir	1189	1163	1122	1056	1000	967	–
Isd	1.5-10	1.5-10	1.5-10	1.5-10	1.5-10	1.5-10	–
Tr at 6 Ir	0.5-24	0.5-24	0.5-24	0.5-24	0.5-24	0.5-24	–
I2t	ON or OFF	ON or OFF	ON or OFF	ON or OFF	ON or OFF	ON or OFF	–
Ii (In)	2-15	2-15	2-15	2-15	2-15	2-15	2500

UPS rating	**750 kW**						
	Input			**Bypass/Output**			**Battery**
Voltage (V)	**380**	**400**	**415**	**380**	**400**	**415**	**380-415**
Disconnect device type	MTZ2 16 H2 3P or 4P D/O or F +MIC 5.0X+_+			MTZ2 12 H2 3P or 4P D/O or F +MIC 5.0X+_+			MasterPacT NW20HDC-D MicroLogic 1.0 DC (48652+65273)
In	1600	1600	1600	1250	1250	1250	2000
Ir	1426	1396	1347	1250	1204	1160	–

UPS rating	750 kW						
	Input			Bypass/Output			Battery
Voltage (V)	380	400	415	380	400	415	380-415
Isd	1.5-10	1.5-10	1.5-10	1.5-10	1.5-10	1.5-10	–
Tr	0.5-24	0.5-24	0.5-24	0.5-24	0.5-24	0.5-24	–
I2t	ON or OFF	ON or OFF	ON or OFF	ON or OFF	ON or OFF	ON or OFF	–
Ii (In)	2-15	2-15	2-15	2-15	2-15	2-15	2500

UPS rating	875 kW						
	Input			Bypass/Output			Battery
Voltage (V)	380	400	415	380	400	415	380-415
Disconnect device type	MTZ2 16 H2 3P or 4P D/O or F +MIC 5.0X+_+			MTZ2 16 H2 3P or 4P D/O or F +MIC 5.0X+_+			MasterPacT NW40HDC-D MicroLogic 1.0 DC (48655+65274)
In	1600	1600	1600	1600	1600	1600	4000
Ir	1600	1600	1571	1478	1404	1353	–
Isd	1.5-10	1.5-10	1.5-10	1.5-10	1.5-10	1.5-10	–
Tr	0.5-24	0.5-24	0.5-24	0.5-24	0.5-24	0.5-24	–
I2t	ON or OFF	ON or OFF	ON or OFF	ON or OFF	ON or OFF	ON or OFF	–
Ii (In)	2-15	2-15	2-15	2-15	2-15	2-15	5000

UPS rating	1000 kW						
	Input			Bypass/Output			Battery
Voltage (V)	380	400	415	380	400	415	380-415
Disconnect device type	MTZ2 20 H2 3P or 4P D/O or F +MIC 5.0X+_+			MTZ2 20 H2 3P or 4P D/O or F +MIC 5.0X+_+	MTZ2 16 H2 3P or 4P D/O or F +MIC 5.0X+_+		MasterPacT NW40HDC-D MicroLogic 1.0 DC (48655+65274)
In	2000	2000	2000	2000	1600	1600	4000
Ir	1902	1861	1796	1689	1600	1547	–
Isd	1.5-10	1.5-10	1.5-10	1.5-10	1.5-10	1.5-10	–
Tr	0.5-24	0.5-24	0.5-24	0.5-24	0.5-24	0.5-24	–
I2t	ON or OFF	ON or OFF	ON or OFF	ON or OFF	ON or OFF	ON or OFF	–
Ii (In)	2-15	2-15	2-15	2-15	2-15	2-15	5000

UPS rating	1125 kW						
	Input			Bypass/Output			Battery
Voltage (V)	380	400	415	380	400	415	380-415
Disconnect device type	MTZ2 25 H2 3P or 4P D/O or F +MIC 5.0X+_+		MTZ2 20 H2 3P or 4P D/O or F +MIC 5.0X+_+	MTZ2 20 H2 3P or 4P D/O or F +MIC 5.0X+_+			MasterPacT NW40HDC-D MicroLogic 1.0 DC (48655+65274)
In	2500	2500	2000	2000	2000	2000	4000
Ir	2139	2094	2000	1900	1806	1740	–
Isd	1.5-10	1.5-10	1.5-10	1.5-10	1.5-10	1.5-10	–
Tr	0.5-24	0.5-24	0.5-24	0.5-24	0.5-24	0.5-24	–
I2t	ON or OFF	ON or OFF	ON or OFF	ON or OFF	ON or OFF	ON or OFF	–
Ii (In)	2-15	2-15	2-15	2-15	2-15	2-15	5000

UPS rating	1250 kW						
	Input			Bypass/Output			Battery
Voltage (V)	380	400	415	380	400	415	380-415
Disconnect device type	MTZ2 25 H2 3P or 4P D/O or F +MIC 5.0X+_+			MTZ2 25 H2 3P or 4P D/O or F +MIC 5.0X+_+	MTZ2 20 H2 3P or 4P D/O or F +MIC 5.0X+_+		MasterPacT NW40HDC-D MicroLogic 1.0 DC (48655+65274)
In	2500	2500	2500	2500	2000	2000	4000
Ir	2377	2326	2244	2111	2000	1933	–
Isd	1.5-10	1.5-10	1.5-10	1.5-10	1.5-10	1.5-10	–
Tr	0.5-24	0.5-24	0.5-24	0.5-24	0.5-24	0.5-24	–
I2t	ON or OFF	ON or OFF	ON or OFF	ON or OFF	ON or OFF	ON or OFF	–
Ii (In)	2-15	2-15	2-15	2-15	2-15	2-15	5000

Recommended Downstream Protection for Distribution Breakers for 400 V (IEC)

NOTE: The recommended downstream protection for distribution circuit breakers is sized for protection of the SCRs in the static bypass switch and for coordination with the unit input disconnect device (UIB)/static switch input disconnect device (SSIB) when external backfeed protection is used.

UPS rating	500 kW	600 kW	625 kW	750 kW	875 kW	1000 kW	1125 kW	1250 kW
Voltage (V)	400	400	400	400	400	400	400	400
Disconnect device type	MTZ1 06 L1 or ComPact NS630bL/ LB MicroLogic or ComPact NSX630 S/ L/R MicroLogic or Masterpact NT06 L1	MTZ1 06 L1 or ComPact NS630bL/ LB MicroLogic or ComPact NSX630 S/ L/R MicroLogic or Masterpact NT06 L1	MTZ1 06 L1 or ComPact NS630bL/ LB MicroLogic or ComPact NSX630 S/ L/R MicroLogic or Masterpact NT06 L1	MTZ1 08 L1 or ComPact NS800bL/ LB MicroLogic or ComPact NSX630 S/ L/R MicroLogic or Masterpact NT08 L1	MTZ1 10 L1 or ComPact NS1000L MicroLogic or ComPact NSX630 S/ L/R MicroLogic or Masterpact NT10 L1	MTZ1 10 L1 or ComPact NS1000L MicroLogic or ComPact NSX630 S/ L/R MicroLogic or Masterpact NT10 L1	MTZ1 10 L1 or ComPact NS1000L MicroLogic or ComPact NSX630 S/ L/R MicroLogic or Masterpact NT10 L1	MTZ1 10 L1 or ComPact NS1000L MicroLogic or ComPact NSX630 S/ L/R MicroLogic or Masterpact NT10 L1

Recommended Cable Sizes for 380/400/415 V (IEC)

⚠⚠DANGER

HAZARD OF ELECTRIC SHOCK, EXPLOSION, OR ARC FLASH

- All wiring must comply with all applicable national and/or electrical codes.
- The maximum allowable cable size is 300 mm^2.
- Shrink sleeves must be fitted over the cable lug crimped zone and must overlap with the cable insulation on all power cables.

Failure to follow these instructions will result in death or serious injury.

The maximum number of cable connections per busbar:

- 6 on input/output/bypass busbars
- 8 on DC+/DC- busbars
- 12 on N busbars
- 18 on PE busbars

NOTE: Overcurrent protection is to be provided by others.

Cable sizes in this manual are based on the minimum requirements in table B.52.3 and table B.52.5 of IEC 60364-5-52 with the following assertions:

- 90 °C conductors
- An ambient temperature of 30 °C
- Use of copper or aluminum conductors
- Installation method F
- For input/bypass/output cables: Single layer on a perforated cable tray; For DC cables, see Guidance for Organizing Battery Cables, page 54.

PE cable size is based on table 54.2 of IEC 60364-5-54.

If the ambient temperature is greater than 30 °C, larger conductors are to be selected in accordance with the correction factors of the IEC.

The DC cables are sized for the kW rating at end of discharge voltage and not the upstream breaker in accordance with IEC 60364 433.3 Omission of devices for protection against overload.

NOTE: Recommended cable sizes and maximum allowable cable size may vary for the auxiliary products. Not all auxiliary products support aluminum cables. Refer to the installation manual provided with the auxiliary product.

NOTE: The DC cable sizes given here are recommendations – Always follow the specific instructions in the battery solution documentation for DC cable sizes and DC PE cable sizes and ensure that the DC cable sizes match the battery breaker rating.

Copper

UPS rating	**500 kW**			**600 kW**			**625 kW**			**750 kW**		
Voltage (V)	**380**	**400**	**415**	**380**	**400**	**415**	**380**	**400**	**415**	**380**	**400**	**415**
Input phases (mm^2)	2x240	2x240	2x185	3x185/ 2x300	3x185/ 2x300	3x185/ 2x300	3x185/ 2x300	3x185/ 2x300	3x185/ 2x300	3x240	3x240	3x240
Input PE (mm^2)	1x240	1x240	1x185	2x185/ 1x300	2x185/ 1x300	2x185/ 1x300	2x185/ 1x300	2x185/ 1x300	2x185/ 1x300	2x240	2x240	2x240
Bypass/ output phases (mm^2)	2x240	2x185	2x185	2x300	2x240	2x240	3x185/ 2x300	2x300	2x240	3x240	3x240	3x185
Bypass PE/ output PE (mm^2)	1x240	1x185	1x185	1x300	1x240	1x240	2x185/ 1x300	1x300	1x240	2x240	2x240	2x185

Copper (Continued)

UPS rating	500 kW			600 kW			625 kW			750 kW		
Voltage (V)	**380**	**400**	**415**	**380**	**400**	**415**	**380**	**400**	**415**	**380**	**400**	**415**
Neutral (mm^2)	2x240	2x185	2x185	2x300	2x240	2x240	3x185/ 2x300	2x300	2x240	3x240	3x240	3x185
DC+/DC- (mm^2)	3x150	3x150	3x150	3x240	3x240	3x240	3x240	3x240	3x240	4x240	4x240	4x240
DC PE (mm^2)	2x150	2x150	2x150	2x240	2x240	2x240	2x240	2x240	2x240	2x240	2x240	2x240

Copper

UPS rating	875 kW			1000 kW			1125 kW			1250 kW		
Voltage (V)	**380**	**400**	**415**	**380**	**400**	**415**	**380**	**400**	**415**	**380**	**400**	**415**
Input phases (mm^2)	4x240/ 3x300	4x240/ 3x300	4x185/ 3x300	5x185/ 4x300	5x185/ 4x240	4x240	5x240/ 4x300	5x240/ 4x300	5x240/ 4x300	6x240/ 5x300	6x240/ 5x300	5x240
Input PE (mm^2)	2x240/ 2x300	2x240/ 2x300	2x185/ 2x300	3x185/ 2x300	3x185/ 2x240	2x240	3x240/ 2x300	3x240/ 2x300	3x240/ 2x300	3x240/ 3x300	3x240/ 3x300	3x240
Bypass/ output phases (mm^2)	4x185/ 3x300	4x185/ 3x300	4x185/ 3x300	4x240	4x240/ 3x300	4x240/ 3x300	4x300	4x300	4x240	4x300	4x300	4x300
Bypass PE/ output PE (mm^2)	2x185/ 2x300	2x185/ 2x300	2x185/ 2x300	2x240	2x240/ 2x300	2x240/ 2x300	2x300	2x300	2x240	2x300	2x300	2x300
Neutral (mm^2)	4x185/ 3x300	4x185/ 3x300	4x185/ 3x300	4x240	4x240/ 3x300	4x240/ 3x300	4x300	4x300	4x240	4x300	4x300	4x300
DC+/DC- (mm^2)	5x240/ 4x300	5x240/ 4x300	5x240/ 4x300	5x240	5x240	5x240	6x240/ 5x300	6x240/ 5x300	6x240/ 5x300	7x240/ 6x300	7x240/ 6x300	7x240/ 6x300
DC PE (mm^2)	2x240/ 2x300	2x240/ 2x300	2x240/ 2x300	3x240	3x240	3x240	3x240/ 3x300	3x240/ 3x300	3x240/ 3x300	4x240/ 3x300	4x240/ 3x300	4x240/ 3x300

Aluminum

UPS rating	500 kW			600 kW			625 kW		
Voltage (V)	**380**	**400**	**415**	**380**	**400**	**415**	**380**	**400**	**415**
Input phases (mm^2)	3x240/ 2x300	3x240/ 2x300	3x240	4x185/ 3x240	4x185/ 3x300	3x240	4x185/ 3x240	4x185/ 3x300	3x240
Input PE (mm^2)	2x240/ 1x300	2x240/ 1x300	2x240	2x185/ 2x240	2x185/ 2x300	2x240	2x185/ 2x240	2x185/ 2x300	2x240
Bypass/ output phases (mm^2)	3x185	3x185/ 2x300	3x150/ 2x300	3x240	3x240	3x240	4x185	3x240	3x240
Bypass PE/ output PE (mm^2)	2x185	2x185/ 1x300	2x150/ 1x300	2x240	2x240	2x240	2x185	2x240	2x240
Neutral (mm^2)	3x185	3x185/ 2x300	3x150/ 2x300	3x240	3x240	3x240	4x185	3x240	3x240
DC+/DC- (mm^2)	3x240	3x240	3x240	4x240	4x240	4x240	4x240	2x240	4x240
DC PE (mm^2)	2x240	2x240	2x240	2x240	2x240	2x240	2x240	2x240	2x240

Aluminum

UPS rating	750 kW			875 kW			1000 kW		
Voltage (V)	**380**	**400**	**415**	**380**	**400**	**415**	**380**	**400**	**415**
Input phases (mm^2)	4x240	4x240	4x240	5x240/ 4x300	5x240/ 4x300	5x240/ 4x300	6x240/ 5x300	6x240/ 5x300	5x240
Input PE (mm^2)	2x240	2x240	2x240	3x240/ 2x300	3x240/ 2x300	3x240/ 2x300	3x240/ 3x300	3x240/ 3x300	3x240
Bypass/ output phases (mm^2)	4x240	4x240	4x240/ 3x300	4x300	4x300	4x240	4x300	4x300	4x300
Bypass PE/ output PE (mm^2)	2x240	2x240	2x240/ 2x300	2x300	2x300	2x240	2x300	2x300	2x300
Neutral (mm^2)	4x240	4x240	4x240/ 3x300	4x300	4x300	4x240	4x300	4x300	4x300
DC+/DC- (mm^2)	5x240/ 4x300	5x240/ 4x300	5x240/ 4x300	6x240/ 5x300	6x240/ 5x300	6x240/ 5x300	7x240/ 6x300	7x240/ 6x300	7x240/ 6x300
DC PE (mm^2)	3x240/ 2x300	3x240/ 2x300	3x240/ 2x300	3x240/ 3x300	3x240/ 3x300	3x240/ 3x300	4x240/ 3x300	4x240/ 3x300	4x240/ 3x300

NOTE: Aluminum cables are not supported for 1125 kW and 1250 kW.

Load Sharing in a Parallel System

NOTICE

RISK OF EQUIPMENT DAMAGE

To ensure correct load sharing in all operation modes in a parallel system, the following recommendations apply:

- The bypass cables must be the same length for all UPSs.
- The output cables must be the same length for all UPSs.
- The input cables must be the same length for all UPSs in a single mains system.
- Cable formation recommendations must be followed.
- The reactance of busbar layout in the bypass/input and output switchgear must be the same for all UPSs.

If the above recommendations are not followed the result can be uneven load sharing in eConversion, ECO mode, or bypass operation and overload of individual UPSs.

Failure to follow these instructions can result in equipment damage.

The impedance of the bypass paths need to be controlled in a parallel UPS system. When operating in eConversion, ECO mode, or bypass operation, the parallel load sharing is determined by the total impedance of the bypass path comprising cables, switchgear, static bypass switch, and cable formation.

Parallel System – Dual Mains

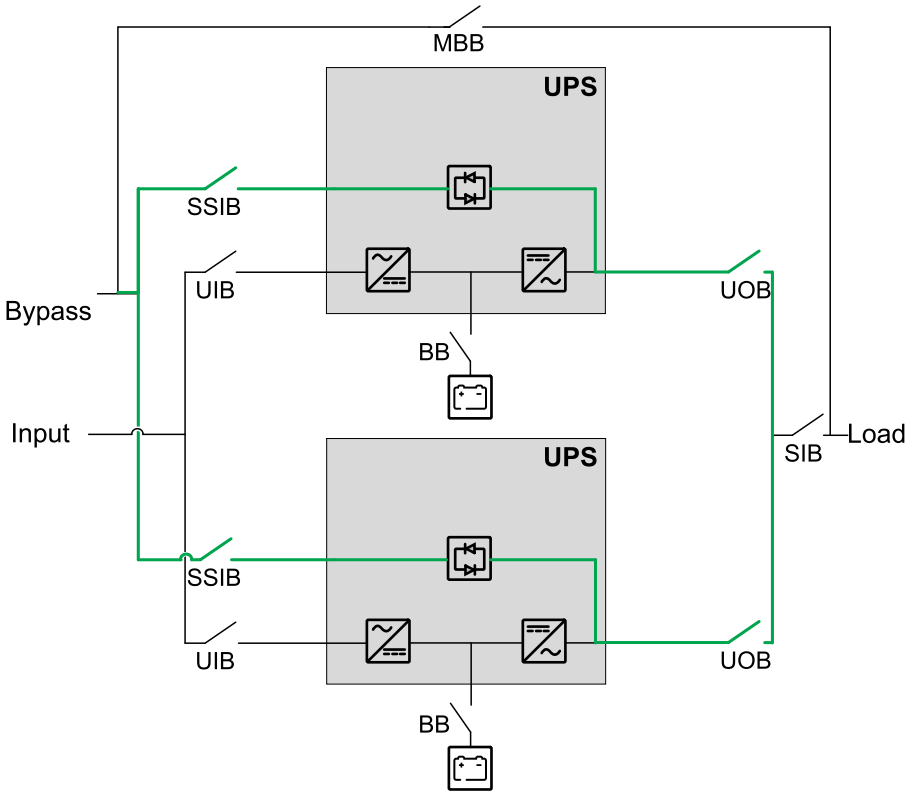

Recommended Bolt and Lug Sizes for 380/400/415 V (IEC)

Cable size mm²	Bolt size	Cable lug type
16	M10 x 40 mm	TLK 16-10
25	M10 x 40 mm	TLK 25-10
35	M10 x 40 mm	TLK 35-10
50	M10 x 40 mm	TLK 50-10
70	M10 x 40 mm	TLK 70-10
95	M10 x 40 mm	TLK 95-10
120	M10 x 40 mm	TLK 120-10
150	M10 x 40 mm	TLK 150-10
185	M10 x 40 mm	TLK 185-10
240	M10 x 40 mm	TLK 240-10
300	M10 x 40 mm	TLK 300-12

Inverter Short Circuit Capabilities (Bypass not Available)

IK1 – Short Circuit between a Phase and Neutral

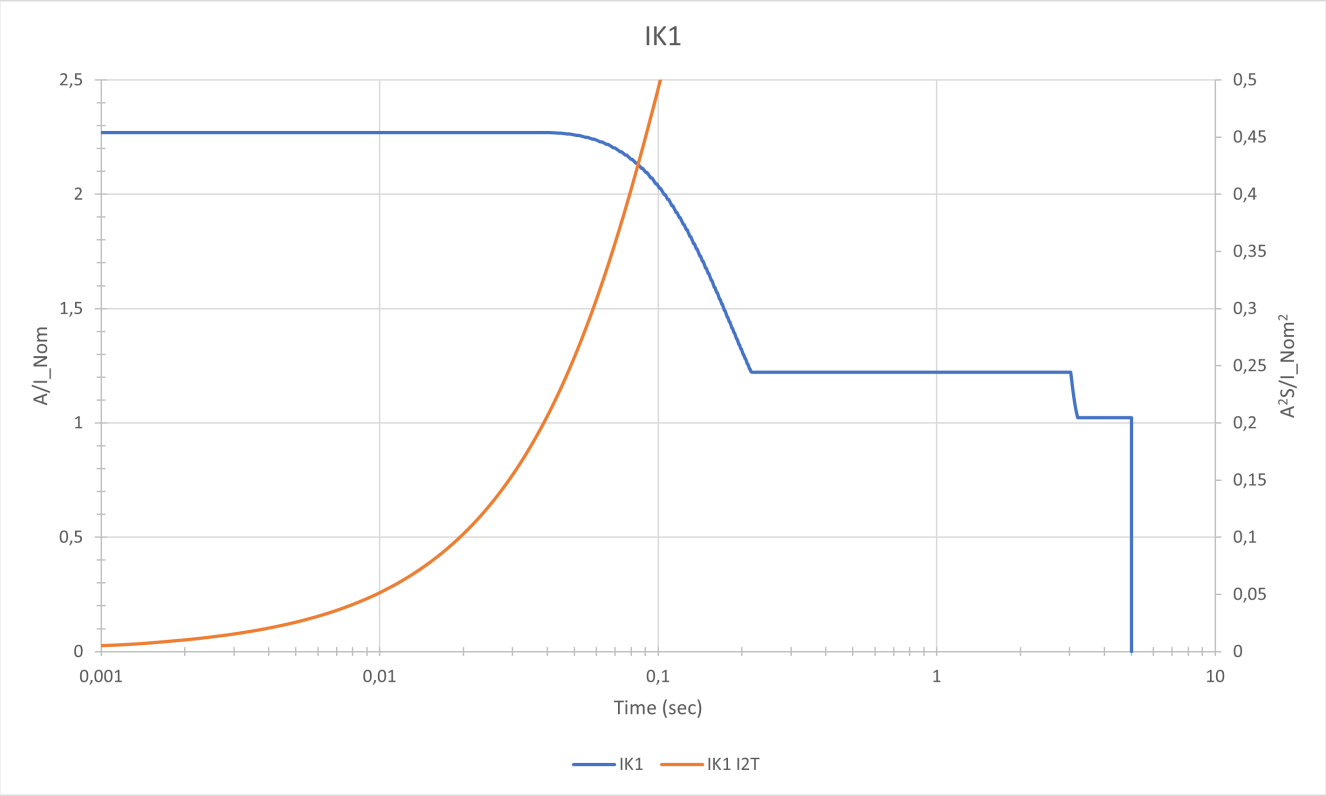

IK1 400 V

S [kVA]	10 ms		20 ms		30 ms		50 ms	
	I[A]	I²t [A²t]	I[A]	I²t [A²t]	I[A]	I²t [A²t]	I[A]	I²t [A²t]
500	1650	27 020	1650	54 030	1650	81 040	1630	135 810
600/625	2060	42 210	2060	84 410	2060	126 620	2040	212 200
750	2470	60 780	2470	121 550	2470	182 320	2450	305 570
875	2880	82 720	2880	165 440	2880	248 160	2860	415 910
1000	3290	108 050	3290	216 090	3290	324 130	3260	543 230
1125	3700	136 740	3700	273 480	3700	410 220	3670	687 530
1250	4110	168 820	4110	337 630	4110	506 450	4080	848 800

IK1 400 V

S [kVA]	100 ms		1 s		5 s	
	I[A]	I²t [A²t]	I[A]	I²t [A²t]	I[A]	I²t [A²t]
500	1480	256 940	890	1 032 660	750	3 719 150
600/625	1840	401 460	1110	1 613 530	930	5 811 170
750	2210	578 100	1330	2 323 470	1120	8 368 080
875	2580	786 850	1550	3 162 500	1300	11 389 890
1000	2950	1 027 730	1770	4 130 620	1490	14 876 590
1125	3320	1 300 710	1990	5 227 810	1670	18 828 180
1250	3680	1 605 820	2210	6 454 090	1860	23 244 660

IK2 – Short Circuit between Two Phases

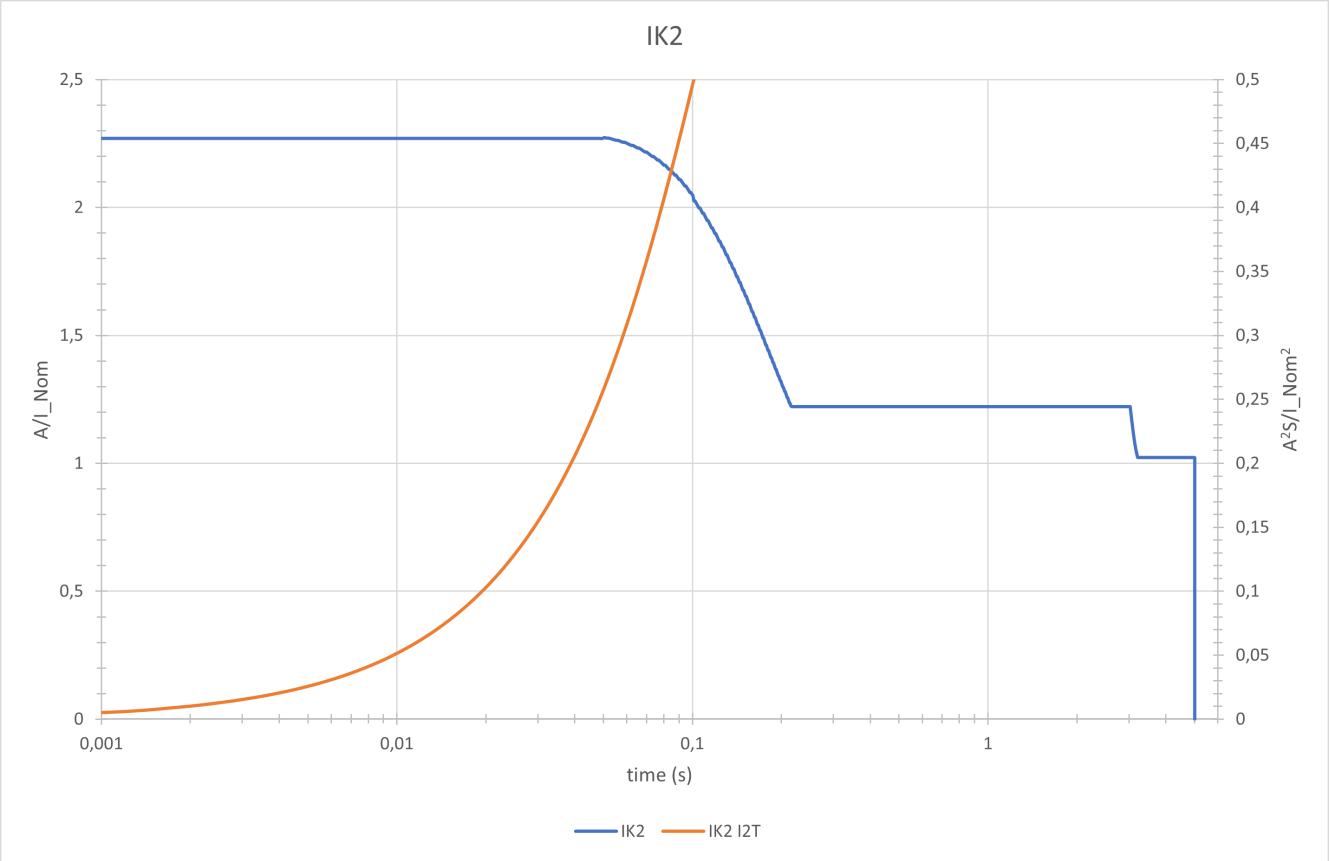

IK2 400 V

S [kVA]	10 ms		20 ms		30 ms		50 ms	
	I[A]	I²t [A²t]	I[A]	I²t [A²t]	I[A]	I²t [A²t]	I[A]	I²t [A²t]
500	1650	27 020	1650	54 030	1650	81 040	1650	133 800
600/625	2060	42 210	2060	84 410	2060	126 620	2060	209 060
750	2470	60 780	2470	121 550	2470	182 320	2470	301 040
875	2880	82 720	2880	165 440	2880	248 160	2890	409 740
1000	3290	108 050	3290	216 090	3290	324 130	3300	535 170
1125	3700	136 740	3700	273 480	3700	410 220	3710	677 330
1250	4110	168 820	4110	337 630	4110	506 450	4120	836 210

IK2 400 V

S [kVA]	100 ms		1 s		5 s	
	I[A]	I²t [A²t]	I[A]	I²t [A²t]	I[A]	I²t [A²t]
500	1490	260 620	890	1 034 590	750	3 720 410
600/625	1860	407 220	1110	1 616 540	930	5 813 140
750	2230	586 400	1330	2 327 820	1120	8 370 920
875	2600	798 150	1550	3 168 420	1300	11 393 750
1000	2970	1 042 480	1770	4 138 340	1490	14 881 630
1125	3340	1 319 380	1990	5 237 590	1670	18 834 560
1250	3710	1 628 870	2210	6 466 160	1860	23 252 540

IK3 – Short Circuit between Three Phases

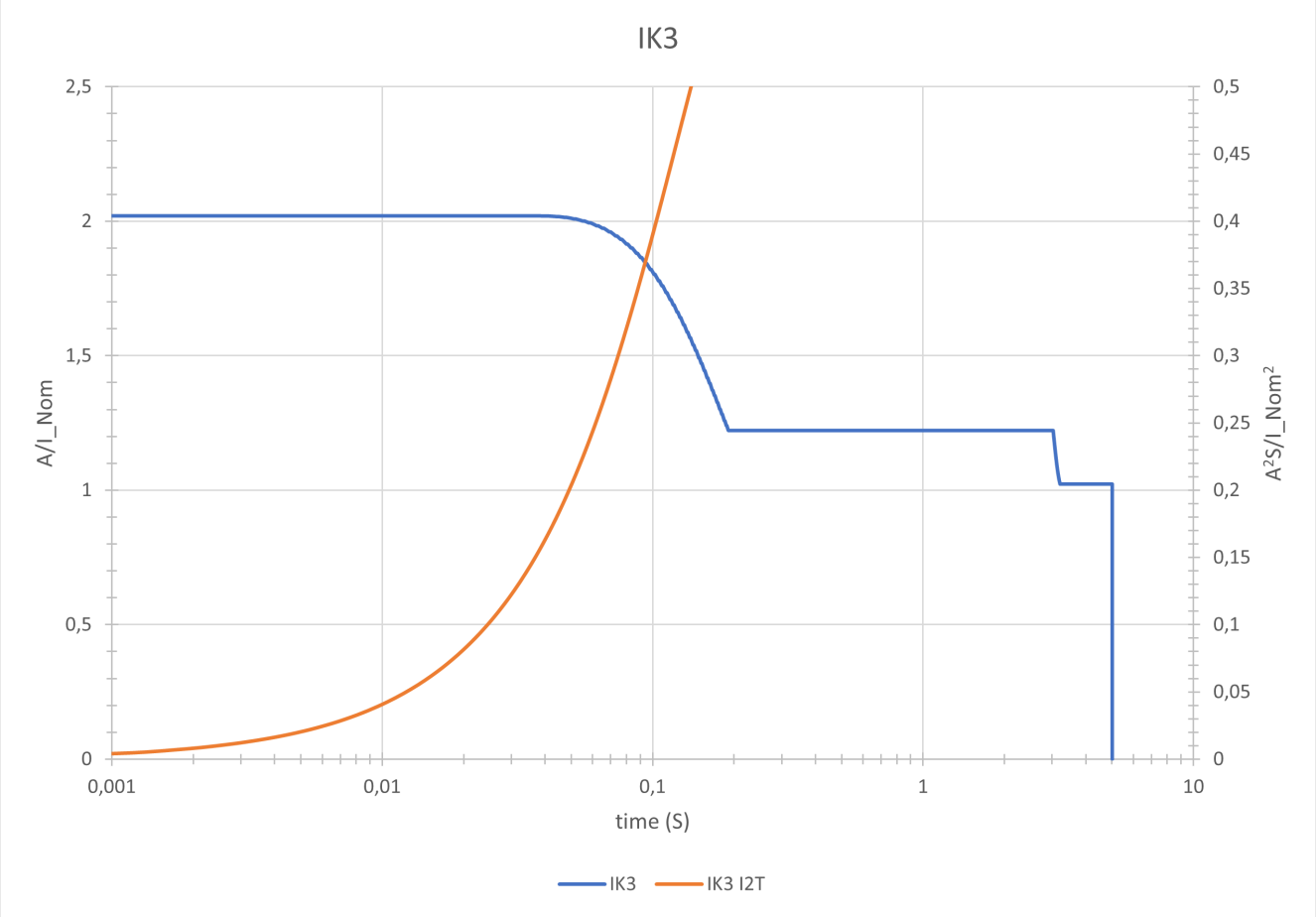

IK3 400 V

S [kVA]	10 ms		20 ms		30 ms		50 ms	
	I[A]	I²t [A²t]	I[A]	I²t [A²t]	I[A]	I²t [A²t]	I[A]	I²t [A²t]
500	1470	21 390	1470	42 780	1470	64 170	1460	105 880
600/625	1830	33 420	1830	66 840	1830	100 260	1820	165 430
750	2200	48 130	2200	96 250	2200	144 380	2190	238 220
875	2560	65 510	2560	131 010	2560	196 510	2550	324 240
1000	2930	85 560	2930	171 110	2930	256 670	2920	423 500
1125	3300	108 280	3300	216 560	3300	324 840	3280	535 990
1250	3660	133 680	3660	267 360	3660	401 040	3640	661 720

IK3 400 V

S [kVA]	100 ms		1 s		5 s	
	I[A]	I²t [A²t]	I[A]	I²t [A²t]	I[A]	I²t [A²t]
500	1310	205 060	890	947 860	750	3 633 680
600/625	1640	320 400	1110	1 481 020	930	5 677 620
750	1970	461 380	1330	2 132 670	1120	8 175 770
875	2300	627 980	1550	2 902 800	1300	11 128 130
1000	2620	820 220	1770	3 791 410	1490	14 534 700
1125	2950	1 038 090	1990	4 798 500	1670	18 395 470
1250	3280	1 281 600	2210	5 924 070	1860	22 710 460

Leakage Current

The earth leakage current is the leakage current which flows through the protective earth conductor to ground. The earth leakage current is measured in the earth/ground cable and is always present.

The leakage current at start-up is higher than the continuous leakage current during operation.

For a 380/400/415 V 1250 kW UPS system 4-wire installation at 100% load:

- The start-up leakage current can be up to 3 A.
- The continuous maximum leakage current is 350 mA with 200 Hz filter on.

Torque Specifications

Bolt size	Torque
M6	5 Nm
M8	17.5 Nm
M10	30 Nm
M12	50 Nm

Requirements for a Third Party Battery Solution

Battery circuit breaker boxes from Schneider Electric are recommended for the battery interface. Please contact Schneider Electric for more information.

Third Party Battery Circuit Breaker Requirements

⚠⚠DANGER

HAZARD OF ELECTRIC SHOCK, EXPLOSION, OR ARC FLASH

- All selected battery circuit breakers must be equipped with instantaneous trip functionality with an undervoltage release coil or a shunt trip release coil.
- Trip delay must be set to zero on all battery circuit breakers.

Failure to follow these instructions will result in death or serious injury.

NOTE: There are more factors to consider when selecting a battery circuit breaker than the requirements listed below. Please contact Schneider Electric for more information.

Design Requirements for a Battery Circuit Breaker

Battery circuit breaker rated DC voltage > Normal battery voltage	The normal voltage of the battery configuration is defined as the highest nominal occurring battery voltage. This can be equivalent to the float voltage which may be defined as **number of battery blocks x number of cells x cell float voltage**.
Battery circuit breaker rated DC current > Rated discharge battery current	This current is controlled by the UPS and must include maximum discharge current. This will typically be the current at the end of discharge (minimum operation DC voltage or in overload condition or a combination).
DC landings	Two DC landings for DC cables (DC+ and DC-) are required.
AUX switches for monitoring	One AUX switch must be installed in each battery circuit breaker and connected to the UPS. The UPS can monitor up to four battery circuit breakers.
Short-circuit breaking capability	The short-circuit breaking capability must be higher than the short-circuit DC current of the (largest) battery configuration.
Minimum trip current	The minimum short-circuit current to trip the battery circuit breaker must match the (smallest) battery configuration, to make the circuit breaker trip in case of a short circuit, up to the end of its life time.

Guidance for Organizing Battery Cables

NOTE: For third party batteries, use only high rate batteries for UPS applications.

NOTE: When the battery bank is placed remotely, the organizing of the cables is important to reduce voltage drop and inductance. The distance between the battery bank and the UPS must not exceed 200 m. Contact Schneider Electric for installations with a longer distance.

NOTE: To minimize the risk of electromagnetic radiation, it is highly recommended to follow the below guidance and to use grounded metallic tray supports.

Cable length	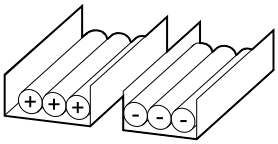	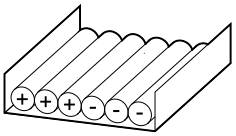	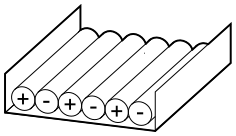	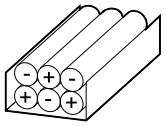
<30 m	Not recommended	Acceptable	Recommended	Recommended
31-75 m	Not recommended	Not recommended	Acceptable	Recommended
76-150 m	Not recommended	Not recommended	Acceptable	Recommended
151-200 m	Not recommended	Not recommended	Not recommended	Recommended

Environment

	Operating	Storage
Temperature	0 °C to 40 °C without load derating. 40 °C to 50 °C when derated to 75% power. **Recommended operating conditions for optimized service life of the UPS**: 17 °C to 27 °C	-25 °C to 55 °C for systems without batteries.
Relative humidity	5-90% non-condensing **Recommended operating conditions for optimized service life of the UPS**: 30-60% non-condensing	0-95% non-condensing
Elevation	Designed for operation in 0-3000 m elevation. Derating required from 1000-3000 m with forced air cooling: 0 to 1000 m: 1.000 1000 to 1500 m: 0.975 1500 to 2000 m: 0.950 2000 to 2500 m: 0.925 2500 to 3000 m: 0.900	0-15000 m
Audible noise one meter from unit	69 dB at 70% load 78 dB at 100% load **NOTE:** The noise level can be higher during charging/battery operation. Use appropriate hearing protection per local regulations.	
Protection class	IP20	
Color	RAL 9003, gloss level 85%	

NOTE: If the equipment is expected to remain in storage for more than 18 months from the date of receipt, please consult your Schneider Electric customer services representative for additional storage related requirements that will help to ensure the long-term reliability and performance of the equipment.

Compliance

Safety	IEC 62040-1: 2017, Edition 2.0, Uninterruptible Power Systems (UPS) - Part 1: Safety requirements
EMC/EMI/RFI	IEC 62040-2: 2016, 3rd edition Uninterruptible Power Systems (UPS) - Part 2: Electromagnetic compatibility (EMC) requirements C3 IEC 62040-2: 2005, 2nd edition Uninterruptible Power Systems (UPS) - Part 2: Electromagnetic compatibility (EMC) requirements C3
Performance	Performance in accordance with: IEC 62040-3: 2021-04, 3rd edition Uninterruptible Power Systems (UPS) - Part 3: Method of specifying the performance and test requirements. Output performance classification (according to IEC 62040-3, Clause 5.3.4): VFI SS 11
Transportation	IEC 60721-4-2 Level 2M2
Earthing system(49)	TN, TNC, TN-S, TNC-S, IT, TT
Overvoltage category	OVC III
Protective class	I
Pollution degree	2

(49) Corner (line) grounding is not permitted.

UPS Weights and Dimensions

Scalable UPS Models

UPS rating	Weight kg	Height mm	Width mm	Depth mm
500 kW	851	1970	1200	1000
625 kW	904	1970	1200	1000
750 kW	957	1970	1200	1000
875 kW	1010	1970	1200	1000
1000 kW	1063	1970	1200	1000
1125 kW	1116	1970	1200	1000
1250 kW	1169	1970	1200	1000

Non-Scalable UPS Models

UPS rating	Weight kg	Height mm	Width mm	Depth mm
600 kW	904	1970	1200	1000

Power Module Weights and Dimensions

Commercial reference	Weight kg	Height mm	Width mm	Depth mm
GVPM125KH	54	130	560	740

Clearance

NOTE: Clearance dimensions are published for airflow and service access only. Consult with the local safety codes and standards for additional requirements in your local area.

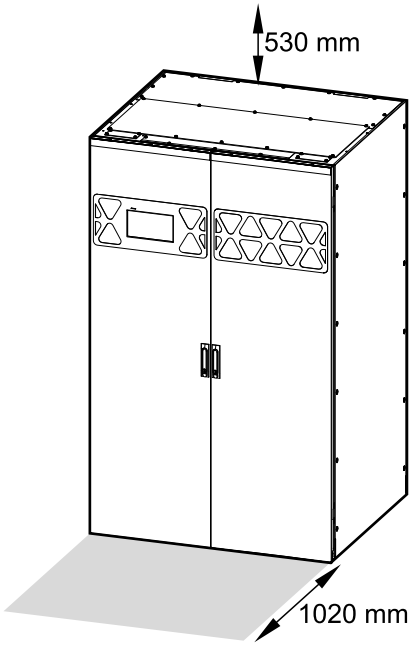

Single System Overview

UIB	Unit input disconnect device
SSIB	Static switch input disconnect device
UOB	Unit output disconnect device
BB	Battery disconnect device
MBB	Maintenance bypass disconnect device

NOTE: In Schneider Electric literature, 'disconnect device' is used as a generic term covering circuit breakers or switches as their position may vary depending on configuration. Details about the individual configuration are found in the electrical diagram and/or by reading the symbol on the front of each disconnect device.

Single System – Single Mains

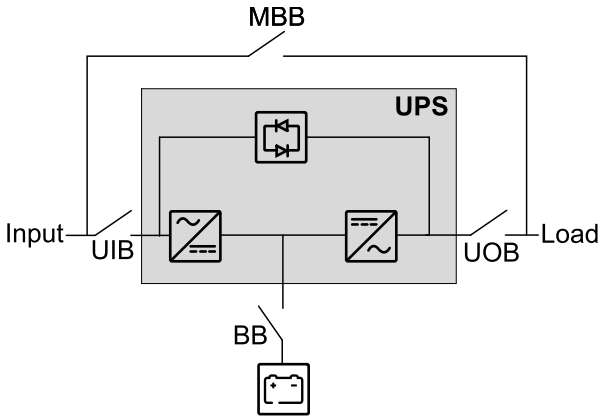

Single System – Dual Mains

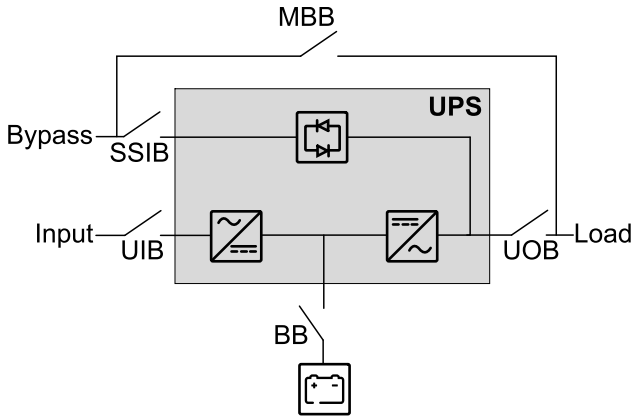

Parallel System Overview

UIB	Unit input disconnect device
SSIB	Static switch input disconnect device
UOB	Unit output disconnect device
SIB	System isolation disconnect device
BB	Battery disconnect device
MBB	Maintenance bypass disconnect device

NOTE: In Schneider Electric literature, 'disconnect device' is used as a generic term covering circuit breakers or switches as their position may vary depending on configuration. Details about the individual configuration are found in the electrical diagram and/or by reading the symbol on the front of each disconnect device.

Galaxy VXL can support up to 4 UPSs in parallel for capacity and up to 4+1 UPSs in parallel for redundancy with individual UIB and SSIB.

Parallel System – Single Mains

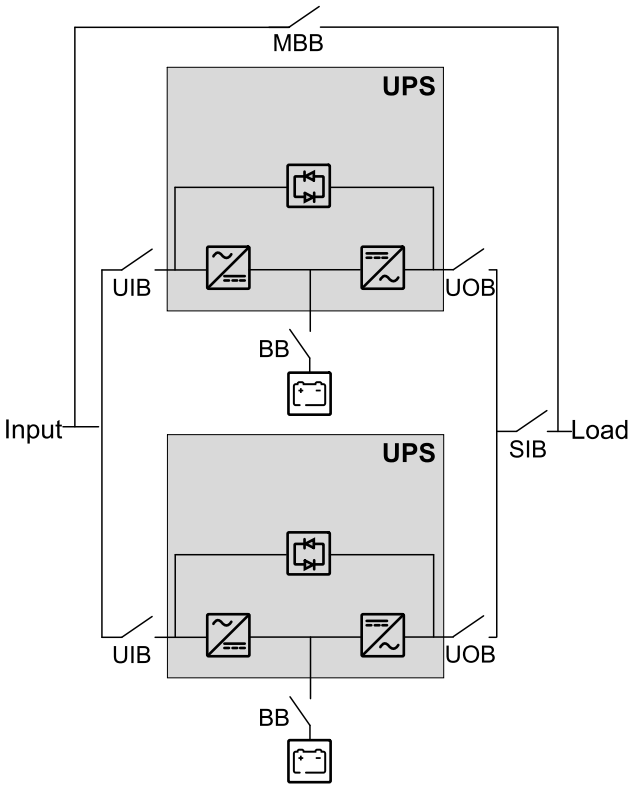

Parallel System – Dual Mains

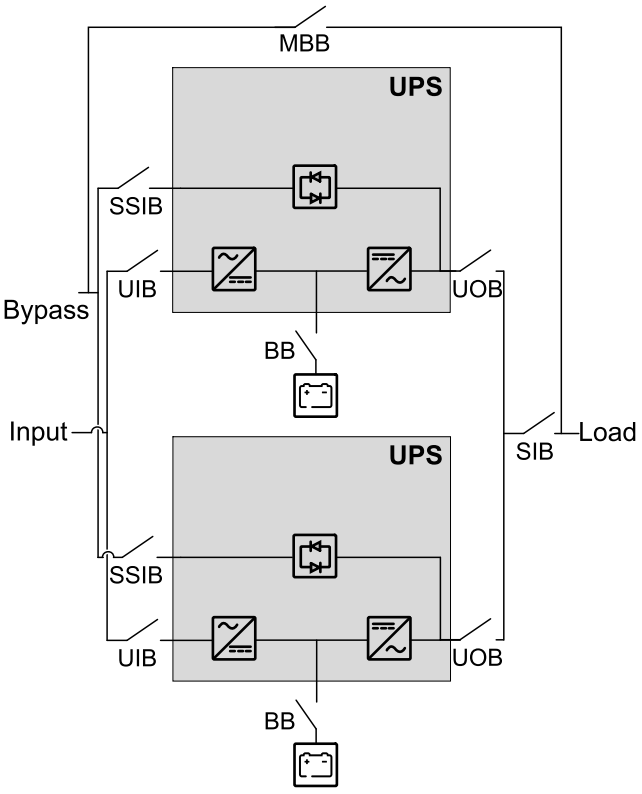

Installation Procedure for the UPS

⚠⚠DANGER

HAZARD OF ELECTRIC SHOCK, EXPLOSION, OR ARC FLASH

The UPS must be secured against movement. Perform one of the following once the UPS is in its final position:

- Lower the leveling feet until the casters no longer have contact with the floor, OR
- Install the seismic anchoring kit.

Failure to follow these instructions will result in death or serious injury.

Single System

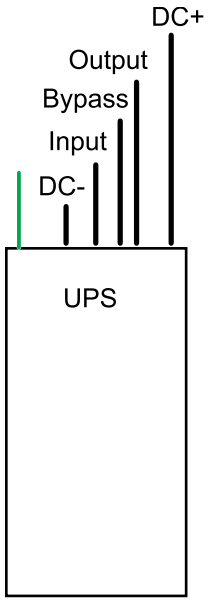

Parallel System

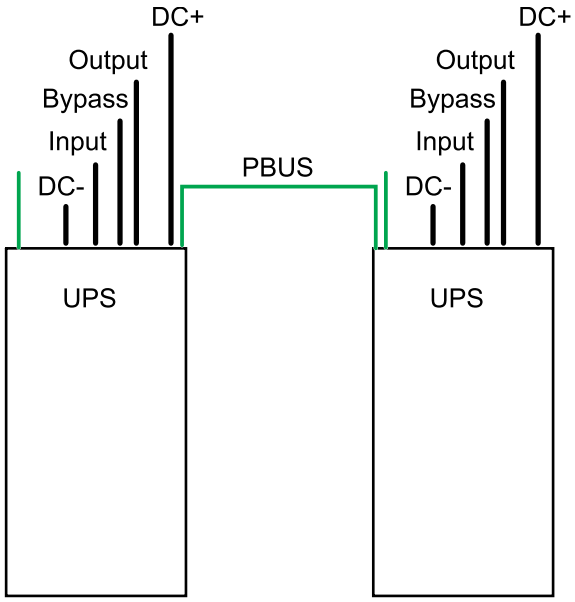

Signal cable
Power cable

1. Remove the Front Doors from the UPS, page 61.
2. Perform one of the following procedures:
   - Without seismic anchoring: Position the UPS without Seismic Anchoring, page 63, OR
   - With seismic anchoring: Mount the Seismic Anchoring and Position the UPS, page 64.
3. Prepare the UPS for Top Cable Entry, page 70.
4. Connect the Power Cables in the UPS, page 73.
5. Only for external synchronization: Connect the Signal Cables for External Synchronization, page 79.
6. Connect the Signal Cables, page 88.
7. Connect the Signal Cables from Switchgear and Third-Party Auxiliary Products, page 92.
8. Connect the External Communication Cables, page 98.
9. Connect the Modbus Cables, page 99.
10. Only for parallel system: Connect the PBUS Cables, page 101.

11. Install the Power Module(s), page 102.
12. Final installation, page 109.

For moving or decommissioning the UPS after installation has been completed, see Decommission or Move the UPS to a New Location, page 112.

Remove the Front Doors from the UPS

1. Remove the packaging bag (marked (A) in the illustration) without cutting it – save the packaging bag (A) for later use.

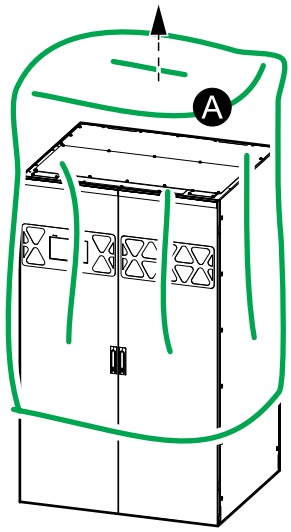

2. Open the front doors.
3. Disconnect the display signal cable and the two LED strip signal cables from the cabinet. Roll up and fasten the signal cables to the doors so they do not get damaged.

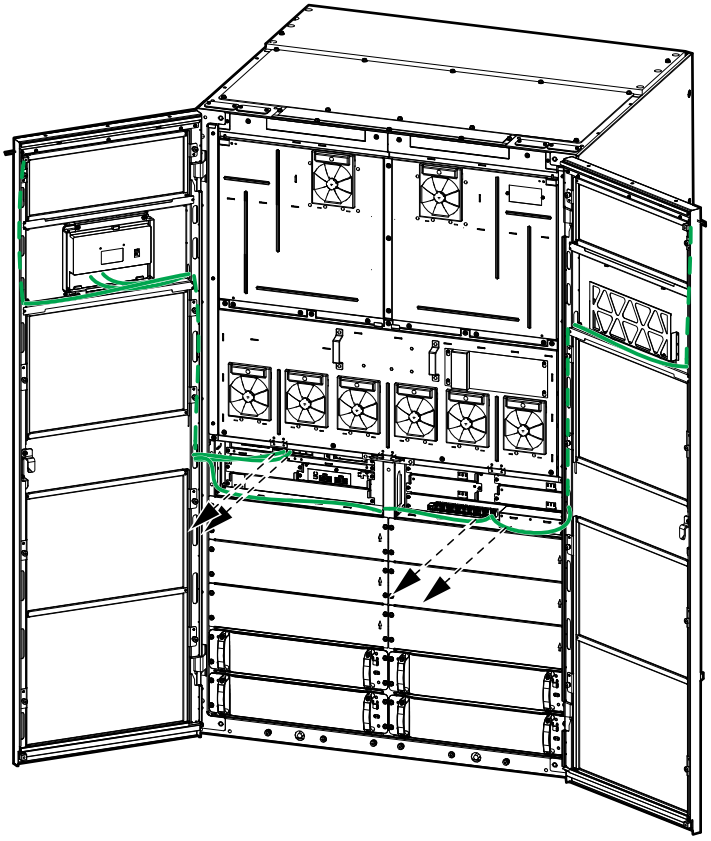

4. Remove kit 0M-18450 (bag with spring washers) from the documentation compartment in the right front door and save for later use.

5. Remove the front doors. Store the front doors safely until reinstallation.

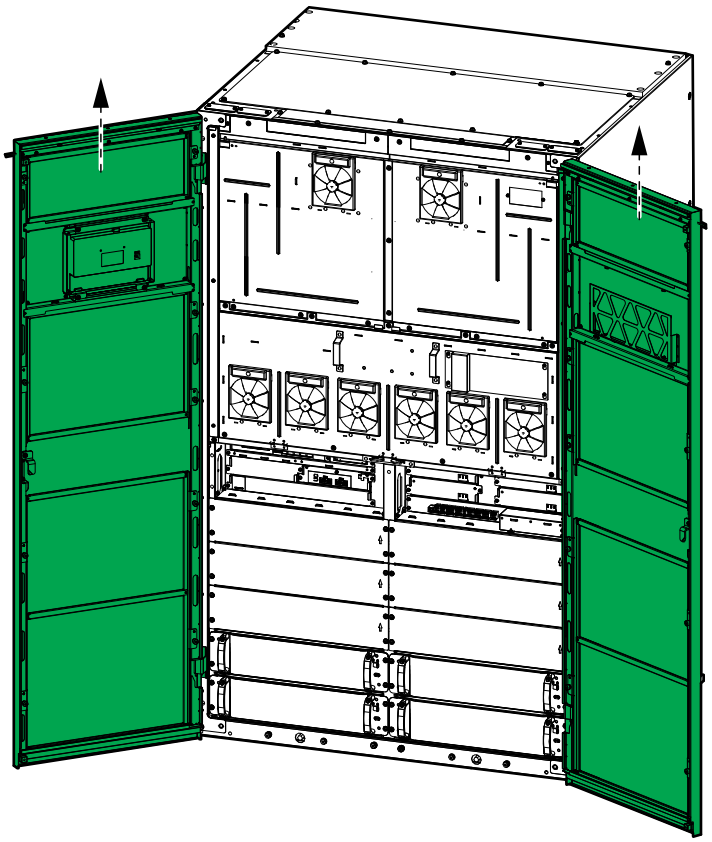

Position the UPS without Seismic Anchoring

1. Push the UPS into position.
2. Lower the front and rear leveling feet on the UPS with a wrench until they have full contact with the floor. The casters must not have contact with the floor. Use a bubble-leveler to check that the UPS is level.

NOTICE
RISK OF EQUIPMENT DAMAGE Do not move the cabinet after the leveling feet have been lowered. **Failure to follow these instructions can result in equipment damage.**

Front View

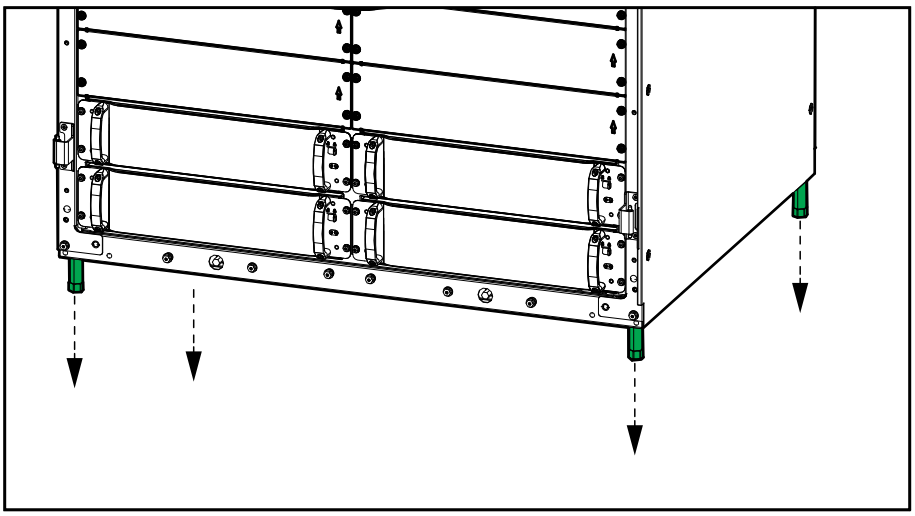

NOTE: For installations with limited rear access, only lower the two front feet.

Mount the Seismic Anchoring and Position the UPS

Use the optional seismic anchoring kit GVXLOPT002 for this procedure.

⚠⚠DANGER

HAZARD OF ELECTRIC SHOCK, EXPLOSION, OR ARC FLASH

Cover the UPS system with the packaging bag while making anchoring holes to prevent dust or other conductive particles from entering the system.

Failure to follow these instructions will result in death or serious injury.

⚠WARNING

HAZARD OF TILTING

All rear and front seismic anchoring brackets must be installed.

Failure to follow these instructions can result in death, serious injury, or equipment damage.

1. Cover the UPS with the packaging bag (marked (A) in the illustration) to protect against dust from drilling in the floor. Roll up the rear side of the packaging bag, so the rear bottom part of the UPS (marked (B) in the illustration) is free.

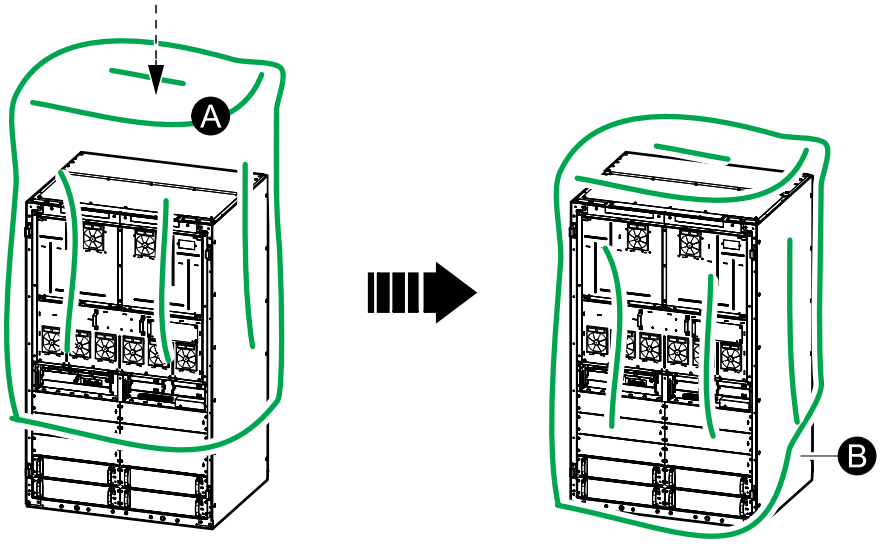

2. Place the rear seismic anchoring bracket for the UPS in the final installation area.

3. Mark the 10 hole locations on the floor.

Front View

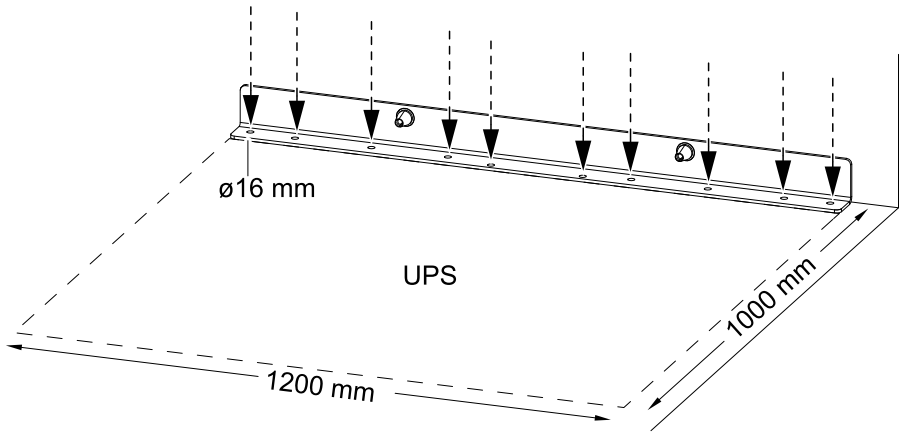

4. Drill the 10 anchoring holes according to national and local requirements.
5. Mount the rear seismic anchoring bracket to the floor. Use appropriate hardware for the floor type – the hole diameter in the rear seismic anchoring bracket is ø16 mm. Minimum requirement is M12 strength grade 8.8 hardware (not provided).
6. Use a bubble-leveler to ensure that the rear seismic anchoring bracket is level. Use the leveling shims if necessary.

7. Push the UPS into position against the rear seismic anchoring bracket - the UPS will connect to the conic outcroppings on the rear seismic anchoring bracket.

> **⚠CAUTION**
>
> **RISK OF EQUIPMENT DAMAGE**
>
> When pushing the UPS into position, push on the frame to avoid damaging the signal cables/plates.
>
> **Failure to follow these instructions can result in injury or equipment damage.**

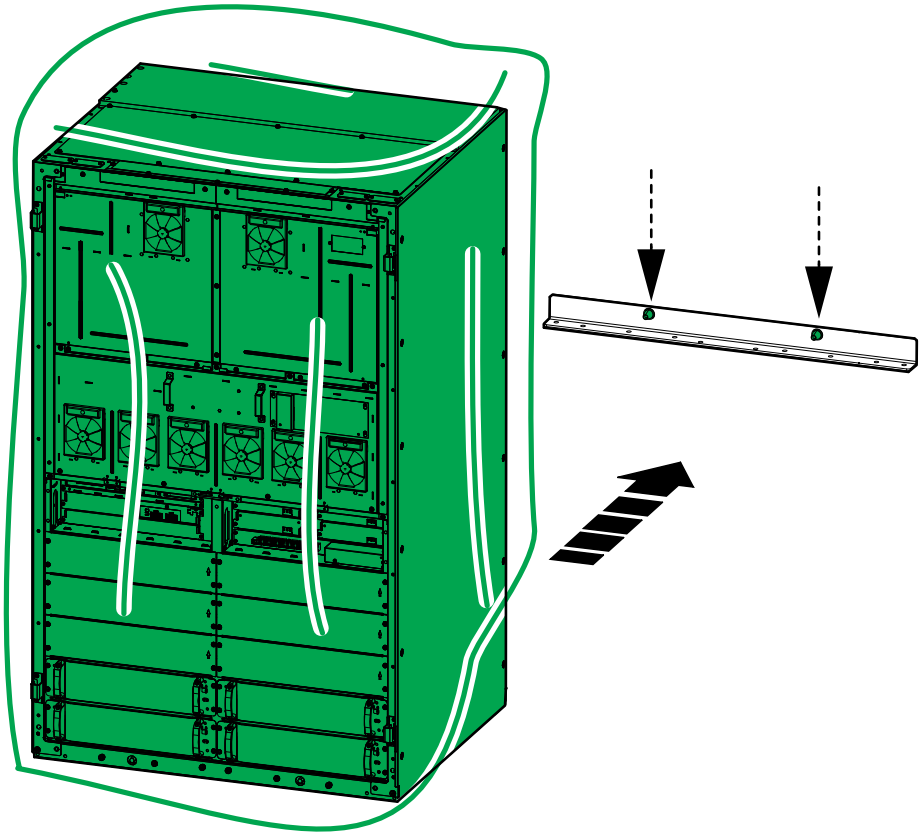

8. Fasten the cabinet to the rear seismic anchoring bracket by tightening the bolts. Torque to 50 Nm (36.87 lb-ft).

Front View

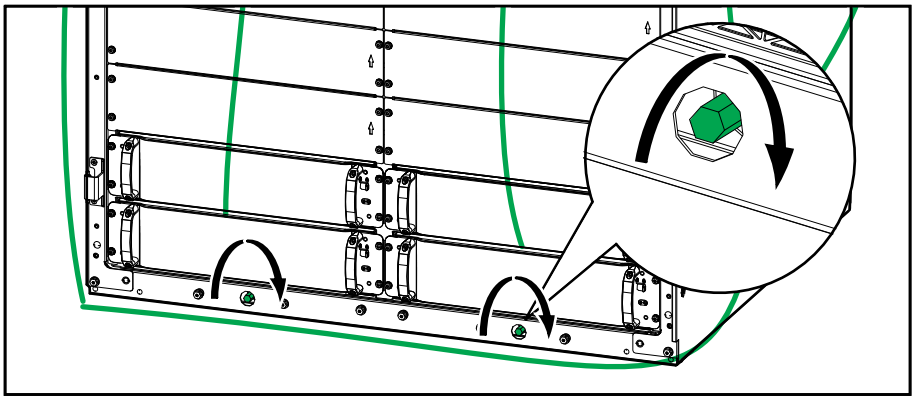

9. Lower the two front feet on the UPS until they have full contact with the floor – use a bubble-leveler to ensure that the cabinet is level.

Front View

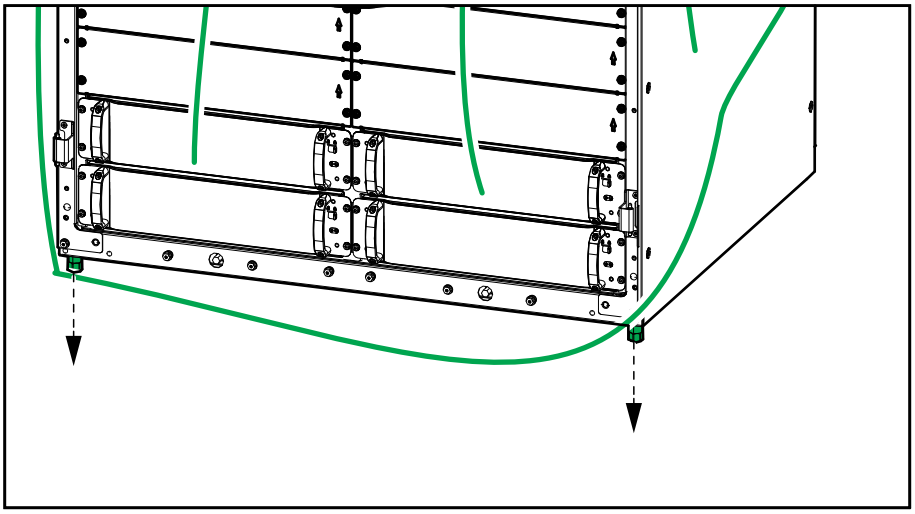

10. Remove the eight M8x30 screws from the front of the UPS. These screws are needed for the front seismic anchoring bracket.

Front View

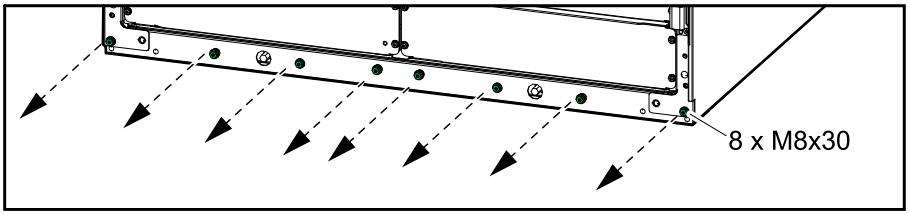

11. Install the front seismic anchoring bracket on the UPS with two M8x30 screws.

Front View

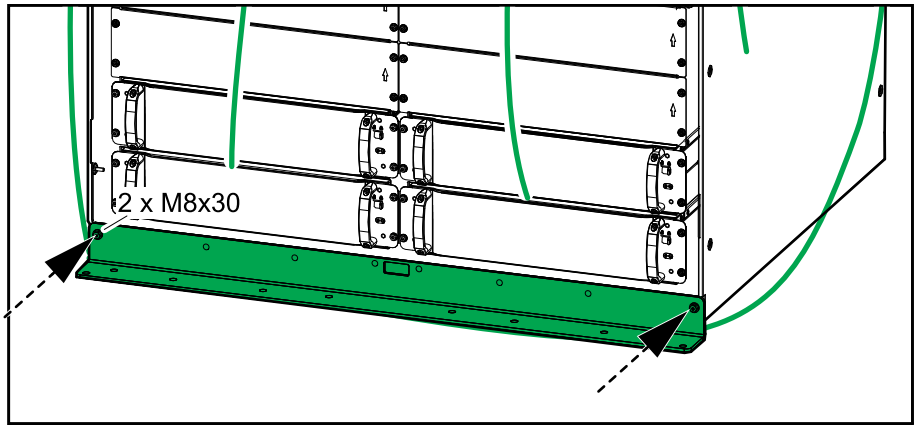

12. Mark the 10 hole locations on the floor.

Front View

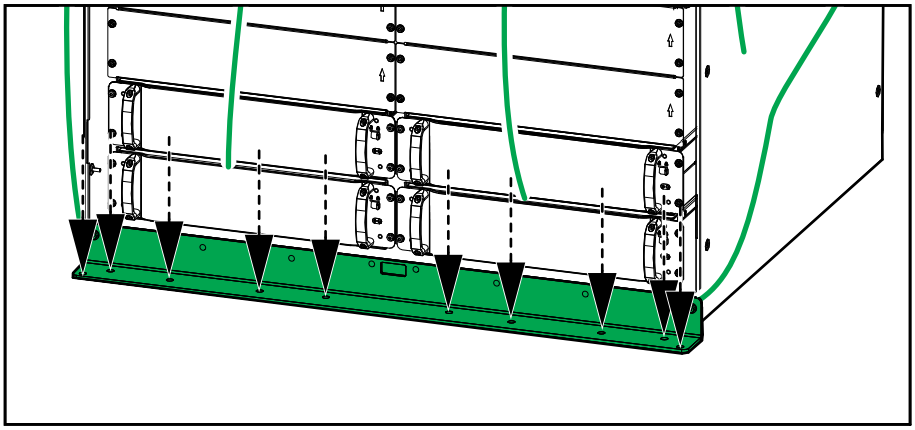

13. Remove the front anchoring bracket from the UPS. Secure the packaging bag against the UPS with tape to create a seal.

    NOTE: The packaging bag must be tight against the frame to protect the power modules from dust when drilling holes in the floor.

14. Drill the 10 anchoring holes according to national and local requirements.
15. Remove the packaging bag from the UPS without cutting it – save the packaging bag for later use.

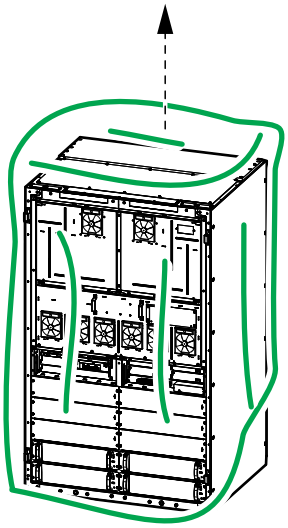

16. Reinstall the front seismic anchoring bracket on the UPS with the eight reused M8x30 screws.

Front View

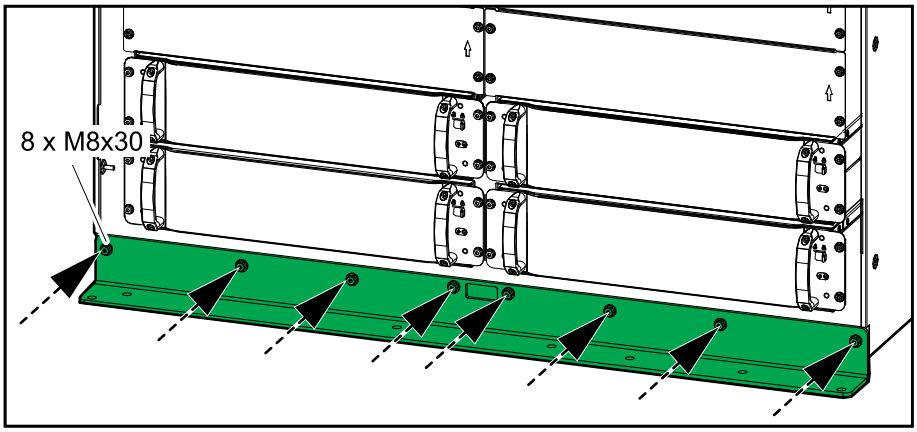

17. Mount the front seismic anchoring bracket to the floor. Use appropriate hardware for the floor type – the hole diameter in the front seismic anchoring bracket is ø16 mm. Minimum requirement is M12 strength grade 8.8 hardware (not provided).

Front View

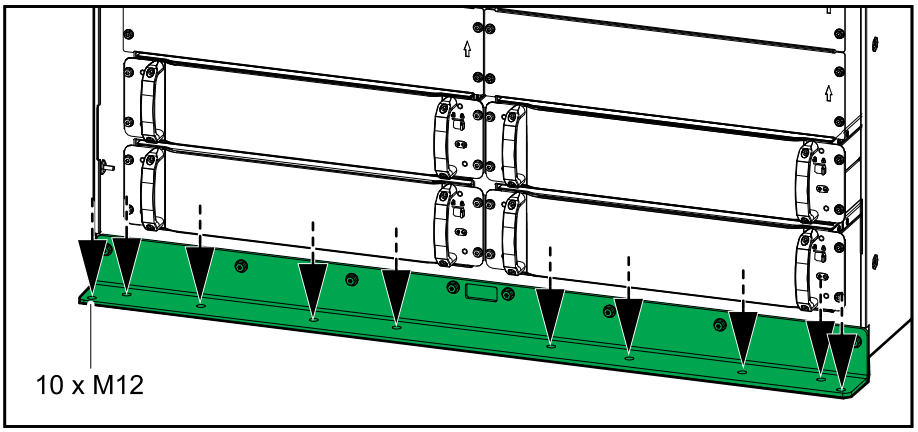

Prepare the UPS for Top Cable Entry

⚠⚠DANGER

HAZARD OF ELECTRIC SHOCK, EXPLOSION, OR ARC FLASH

- Do not drill or punch holes with the gland plates installed and do not drill or punch holes in close proximity to the cabinet.
- Ensure that the holes do not have sharp edges that can damage the cables.

Failure to follow these instructions will result in death or serious injury.

1. Prepare for power cables:
   a. Remove the gland plate for power cables from the top of the UPS.

Front View

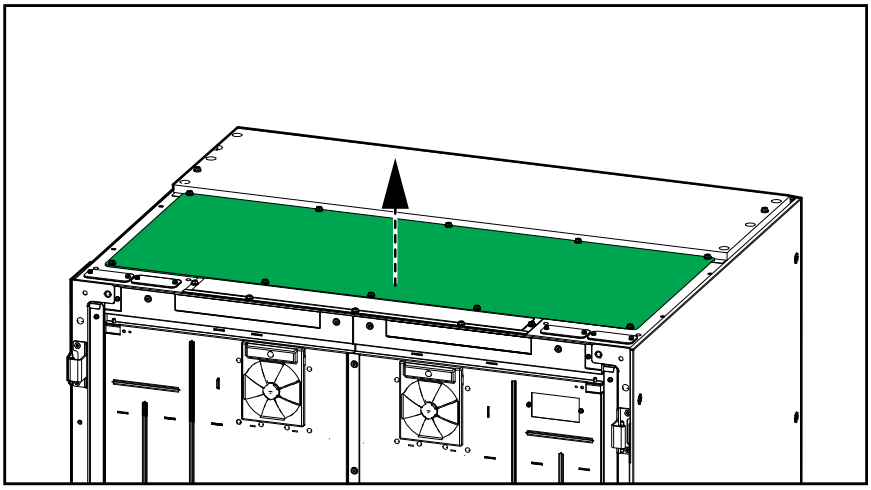

   b. Drill/punch holes for power cables or conduits/grommets in the gland plate for power cables. Install conduits/grommets (not provided), if applicable.
   c. Reinstall the gland plate for power cables.
2. Route the power cables into the UPS as shown.

Front View

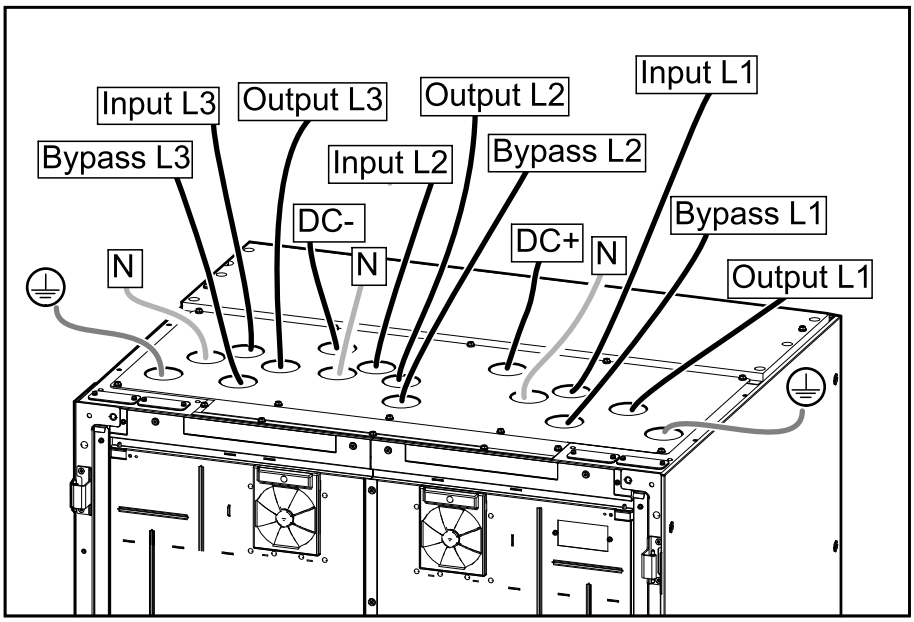

3. Remove the non-Class 2/non-SELV protection cover from the non-Class 2/ non-SELV signal terminals. Remove the long narrow covers.

Front View

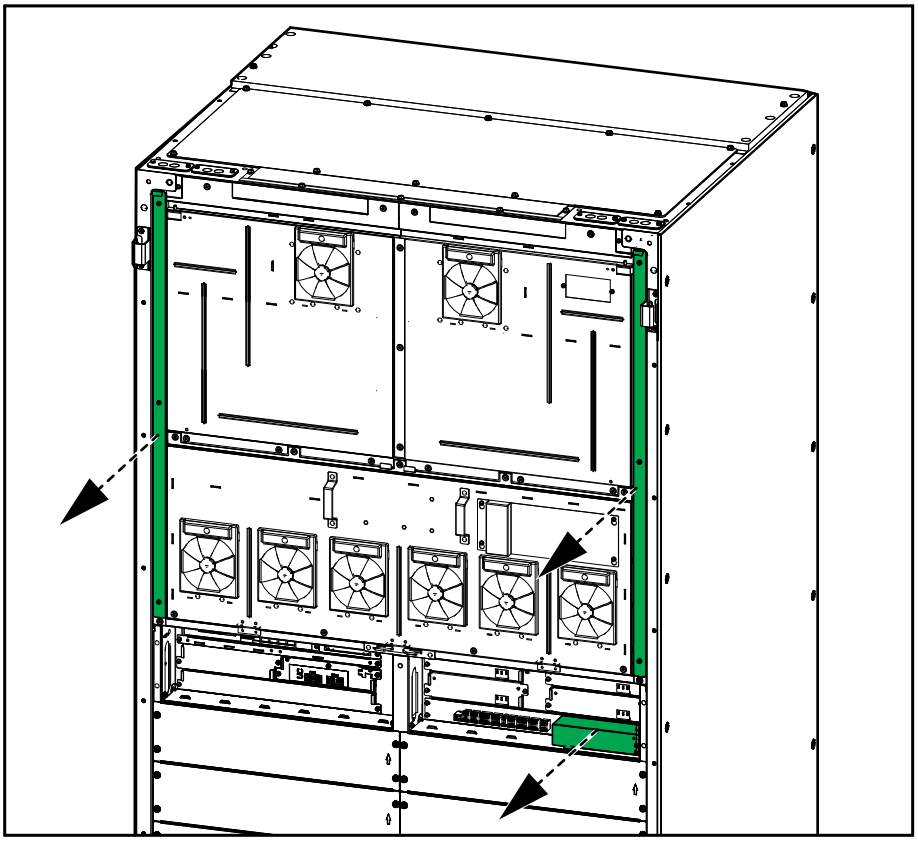

4. Prepare for signal cables:
   a. Remove the gland plates and brush plates from the top of the UPS.

Front View

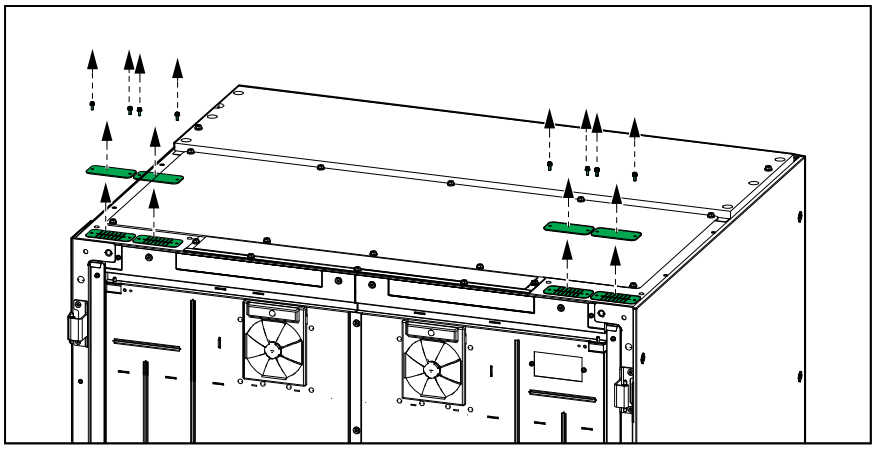

   b. **For installation without conduits/grommets**: Reinstall the brush plates.
   c. **For installation with conduits/grommets**: Drill holes in the gland plates for conduits/grommets, install conduits/grommets (not provided), and reinstall the gland plates.

5. Route the signal cables into the UPS as shown to separate the Class 2/SELV cables from the non-Class 2/non-SELV cables.

Front View

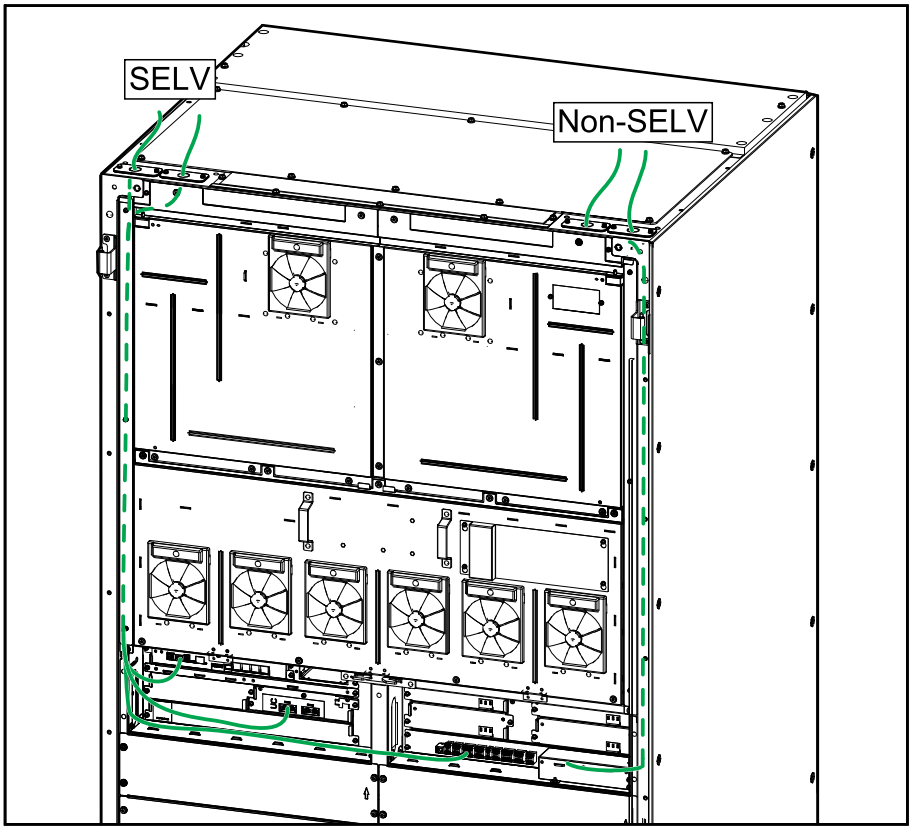

Connect the Power Cables in the UPS

NOTE: If a breaker kit for AC power supply of external Lithium-ion BMS (GVXLOPT004) is part of your installation, the breaker kit for AC power supply of external Lithium-ion BMS must be installed **before** the power cables are connected in the UPS. Follow the installation manual provided with the breaker kit for AC power supply of external Lithium-ion BMS.

1. Remove the two inner doors. Save all parts for reinstallation:
   a. Remove the two screws and the two L-shaped parts. Remove the 13 screws.

Front View

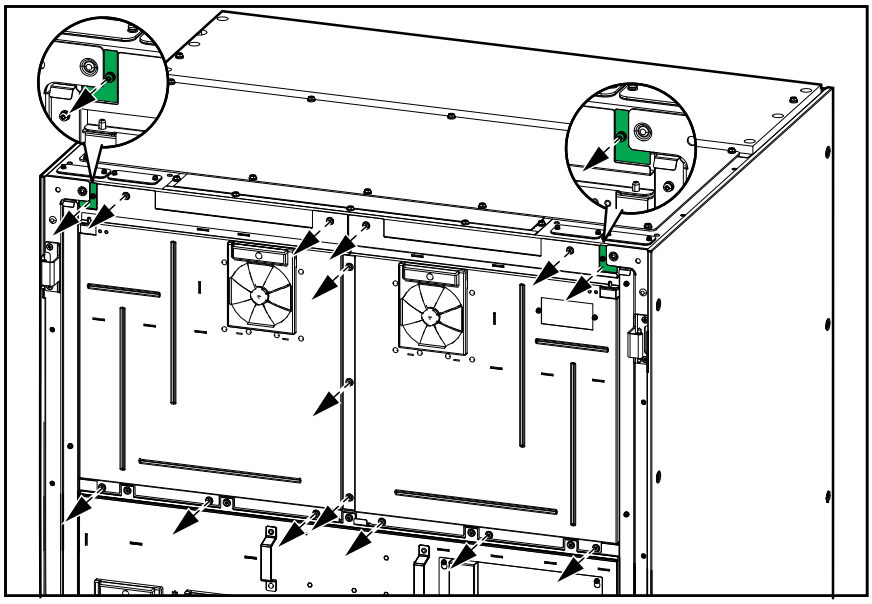

   b. Open the two inner doors.
   c. Unplug the signal cable connectors.
   d. Remove the nut and brackets in both sides.

Front View

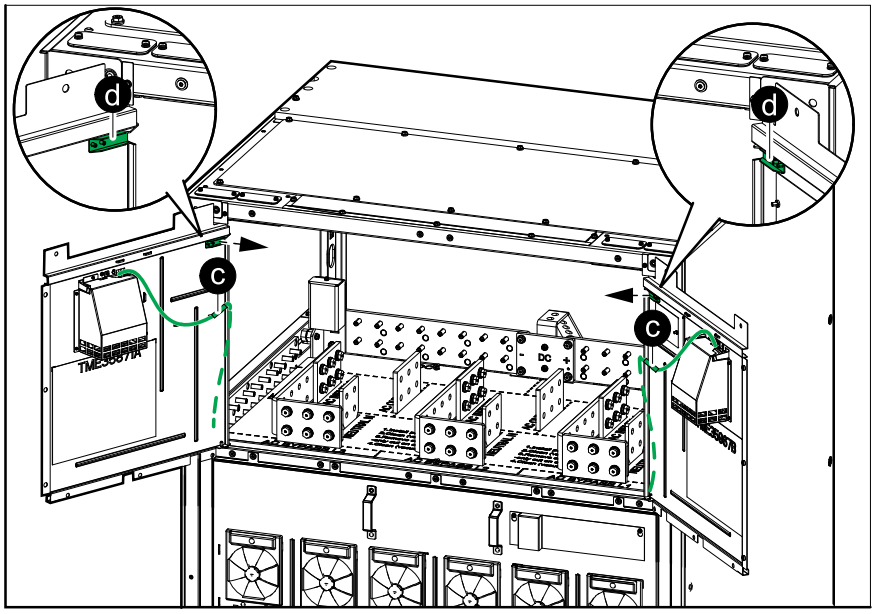

   e. Lift the inner doors upwards to remove them.

Front View

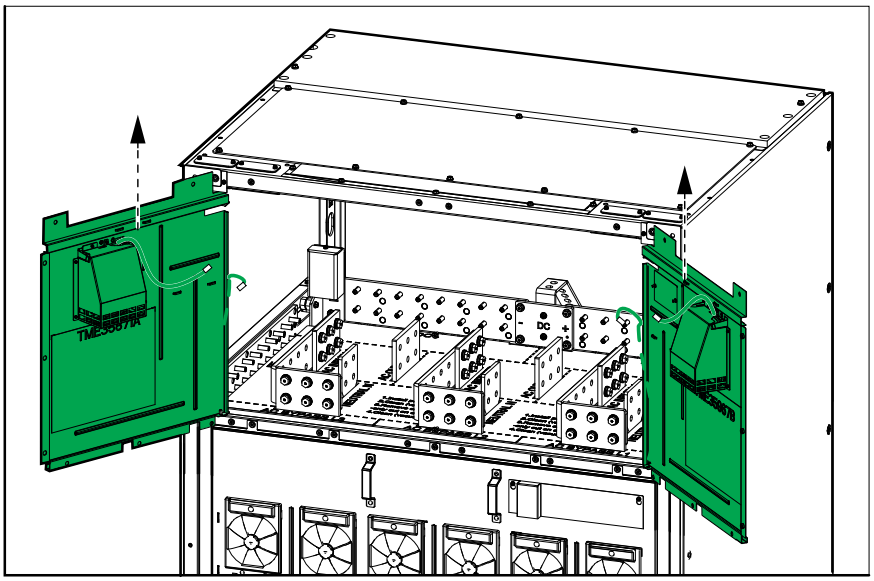

2. **Only for dual mains system**: Remove the three single mains busbars. Save the three single mains busbars for testing during start-up of the UPS.

Front View

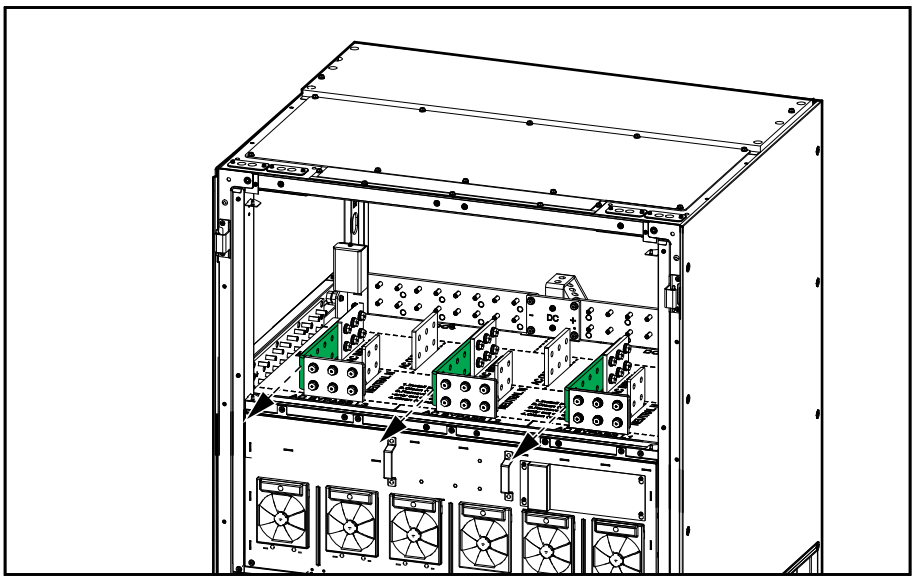

3. **Only for TNC earthing system**: Move busbar 880-63490 to connect the N busbar to the PE busbar in the UPS:
   a. Remove the four screws and remove busbar 880-63490 from its original position (A). Save the screws.
   b. Install busbar 880-63490 with the four screws in the new position (B). Lift/move the cardboard plate enough to get access, but do not remove the cardboard plate.

Front View

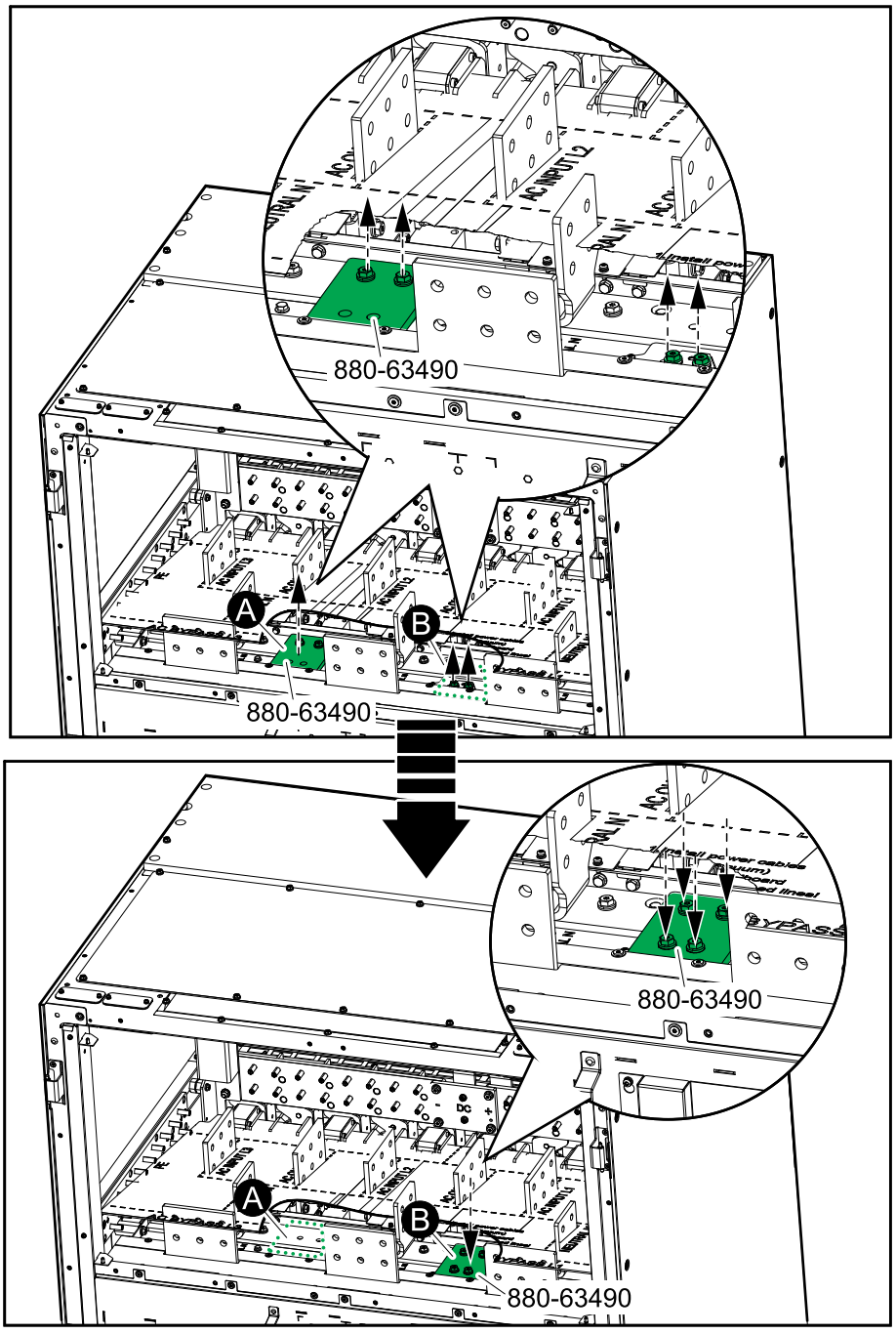

4. Connect the power cables in the described order. Assemble the cable lugs to the busbars as shown.

Front View

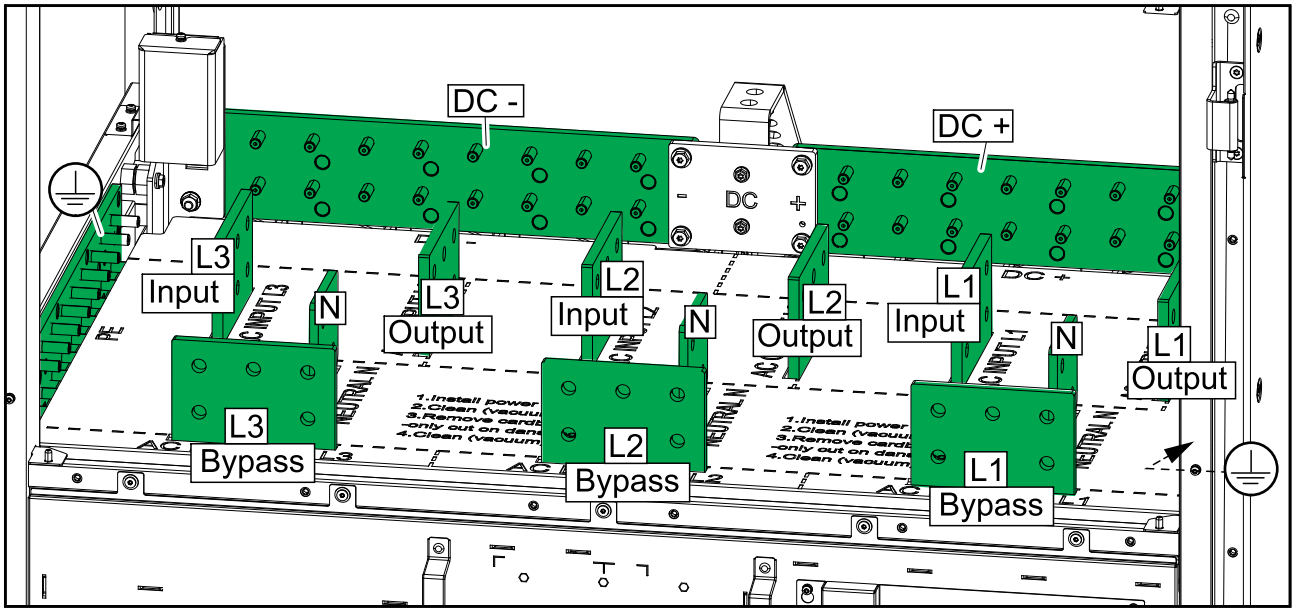

⚠CAUTION

RISK OF CABLE LUG DISCONNECTION

- Use the provided spring washers when connecting the cable lugs to the busbars as shown in the illustration.
- Connect the cable lugs to the busbars as shown in the illustration.

Failure to follow these instructions can result in injury or equipment damage.

Cable Lug to Busbar Assembly

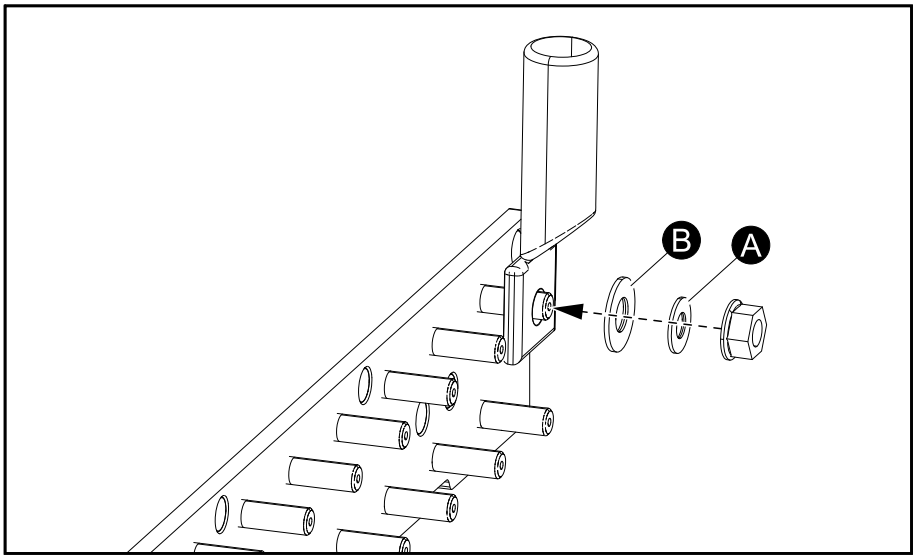

Cable Lug to Busbar Assembly

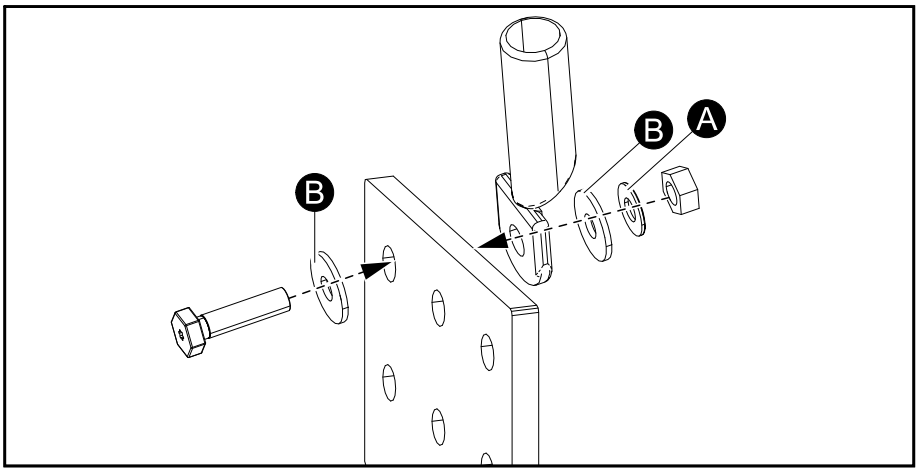

Spring washer (A) – provided in kit 0M-18450. Flat washer (B) (not provided).

a. Connect the PE cables.

b. Connect the DC- cables. Connect the DC+ cables. **Ensure correct polarity – incorrect polarity will damage the power modules at start-up.**

> **⚠ CAUTION**
>
> **RISK OF EQUIPMENT DAMAGE**
>
> Ensure correct connection of DC cables. Ensure correct polarity – incorrect polarity will damage the power modules at start-up.
>
> **Failure to follow these instructions can result in injury or equipment damage.**

c. Connect the output cables (L1, L2, L3, N). Note that the three N busbars are common for input, bypass, and output.

d. Connect the input cables (L1, L2, L3, N). Note that the three N busbars are common for input, bypass, and output.

e. **Only for dual mains system**: Connect the bypass cables (L1, L2, L3, N). Note that the three N busbars are common for input, bypass, and output.

5. Remove all debris and clean the cabling area. Cut up the cardboard plate and remove it. Ensure that no cardboard pieces are left in the cabinet.

Front View

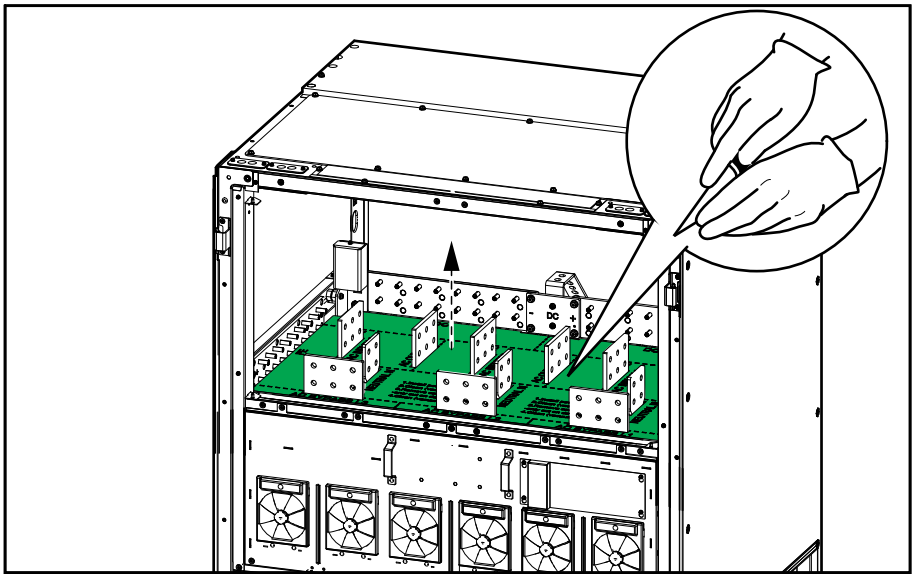

6. Reinstall the two inner doors:

   NOTE: The inner doors also have to be removed for installation of external synchronization. If external synchronization is part of your system, go directly to Connect the Signal Cables for External Synchronization, page 79.

   a. Lift the inner doors onto the hinges.

   b. Reinstall the nut and brackets in both sides.

   c. Reconnect the signal cable connectors.

   d. Close the inner doors and reinstall the 13 screws.

   e. Reinstall the L-shaped part in both sides with the two screws.

Front View

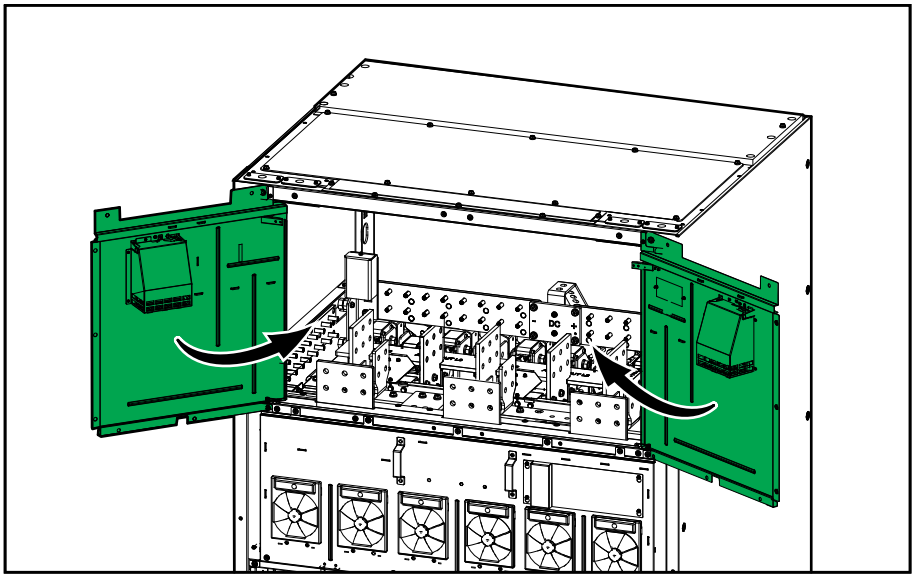

Connect the Signal Cables for External Synchronization

⚠⚠DANGER

HAZARD OF ELECTRIC SHOCK, EXPLOSION, OR ARC FLASH

Check for absence of voltage for all three signal terminals on the external synchronization board 0P4809. When the external synchronization cables are installed, the terminals on the external synchronization board 0P4809 may be energized. Disconnect the fuse disconnector device at the source before removing the transparent protection cover.

Failure to follow these instructions will result in death or serious injury.

Cable Size and Fuse Disconnector Device for External Synchronization

Fuse and disconnector at source	Fuse disconnector marking	Cable size	Conduits
In = 2A, I.R=100 kA	Fuse disconnector identification number and external synchronization UPS number.	2 x 1.5 mm^2	–

The maximum voltage for external synchronization is equal to the input voltage range given in the specifications. The Class 2/SELV cables for external synchronization shall be a double insulated cable and rated for 600 VAC.

1. Remove the two inner doors. Save all parts for reinstallation:
   a. Remove the two screws and the two L-shaped parts. Remove the 13 screws.

      Front View

      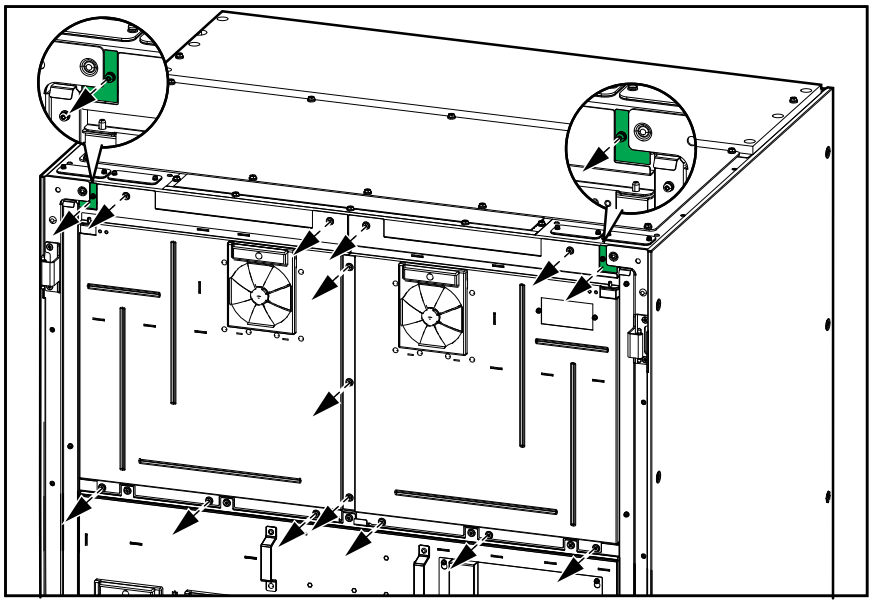

   b. Open the two inner doors.
   c. Unplug the signal cable connectors.
   d. Remove the nut and brackets in both sides.

Front View

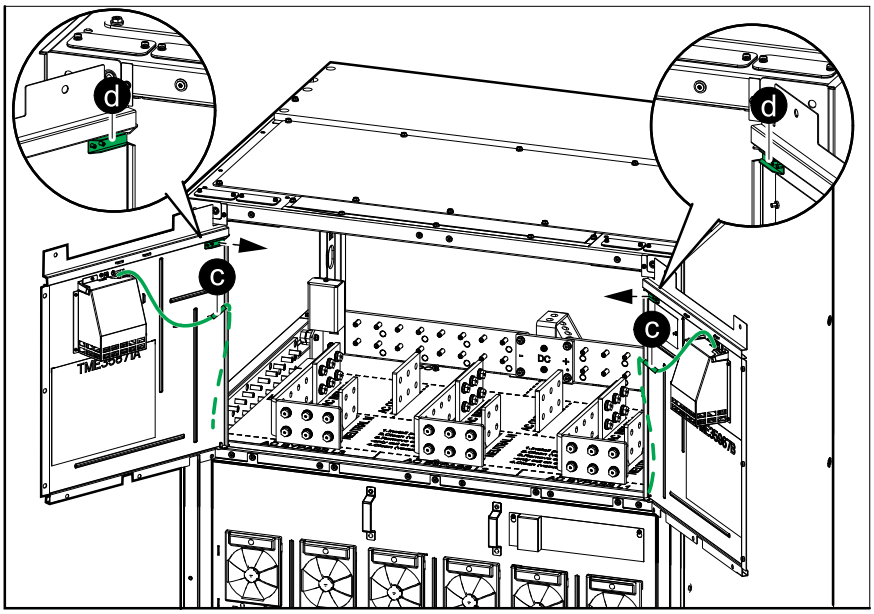

e. Lift the inner doors upwards to remove them.

Front View

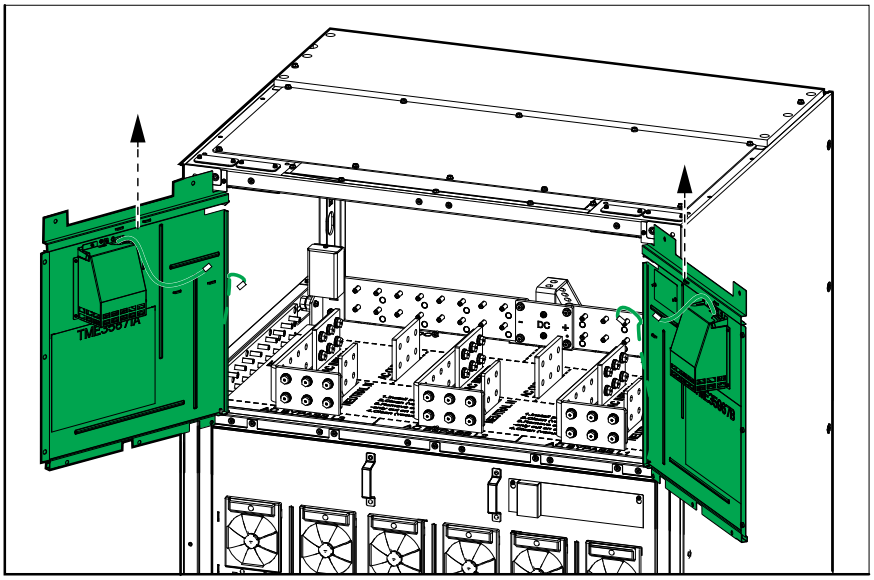

2. Remove the transparent protection cover from the external synchronization board 0P4809. Connect the cables for external synchronization to the external synchronization board 0P4809.

Front View

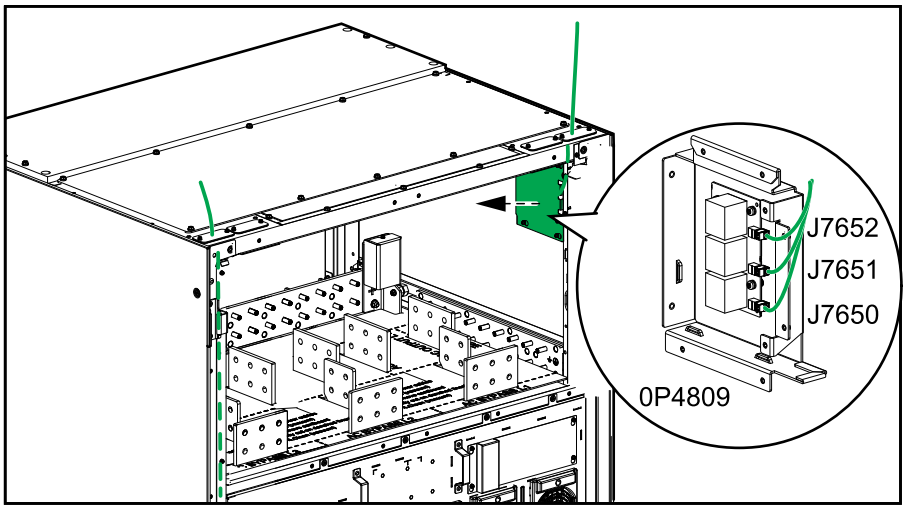

3. Connect the cables for external synchronization to terminals J6603 and J6604.

Front View

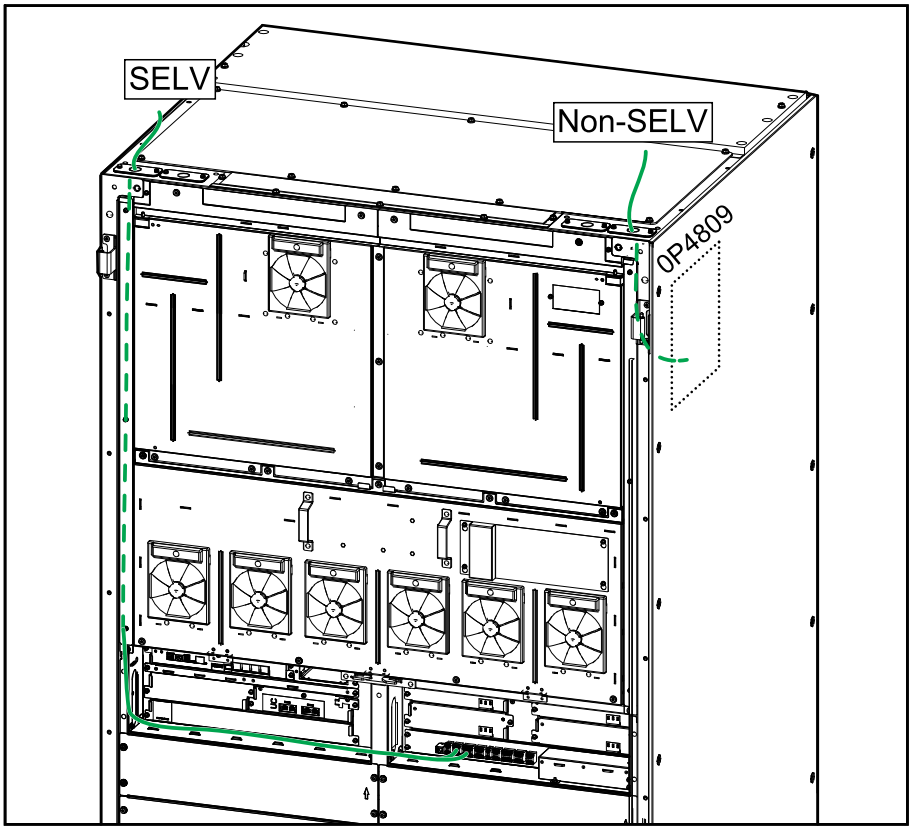

Front View of Signal Connection Terminals in the UPS

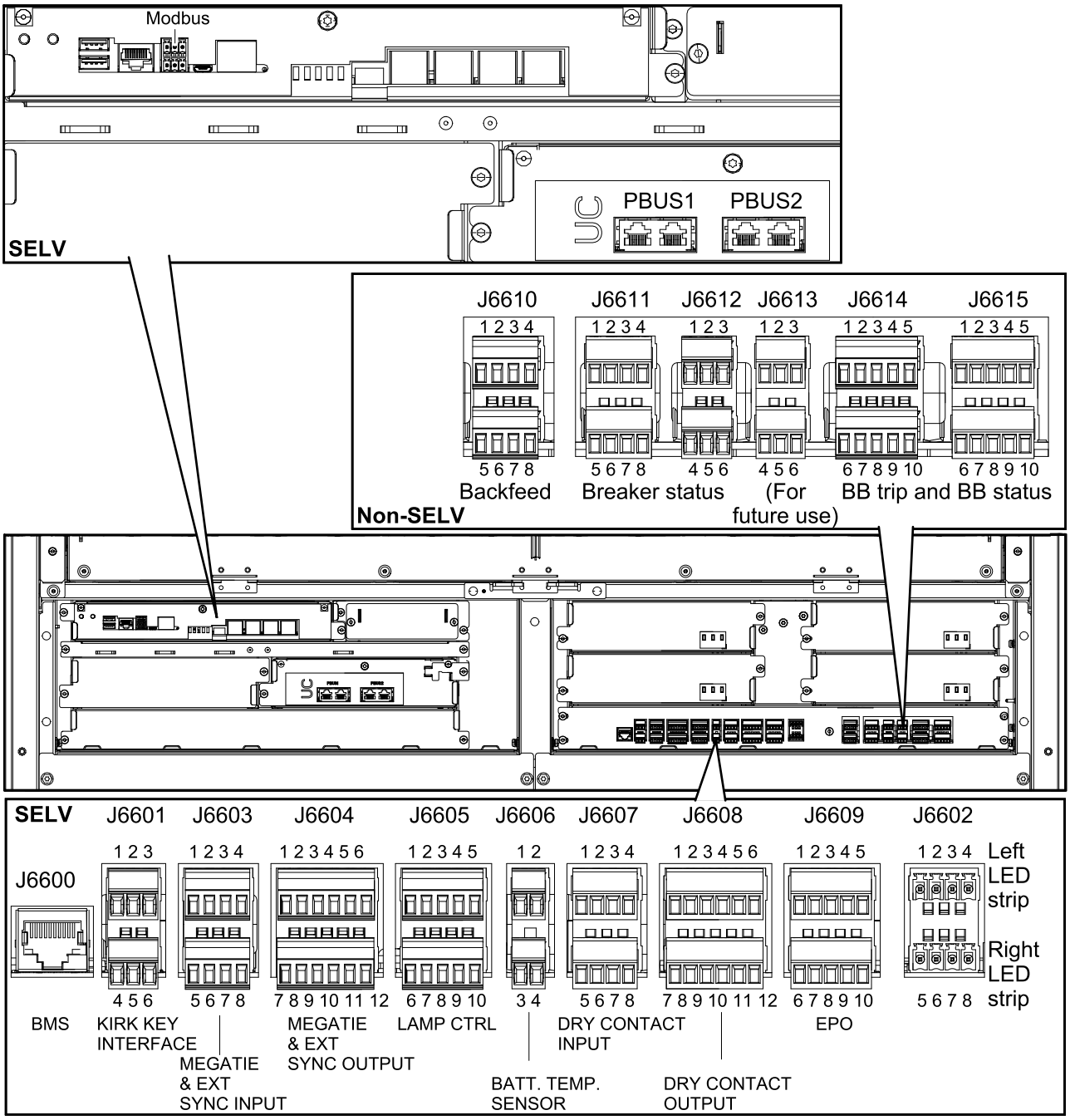

4. Connect the external synchronization per your configuration according to one of the diagrams below. Ensure that fuse disconnector devices are installed at the source as shown in the diagrams.

   NOTE: The connection on J6603 pin 3 and 4 can be with a jumper or can be controlled externally from a PLC or another external system.

Signal Cable Connections for UPS Synchronization to a Fixed Voltage Source

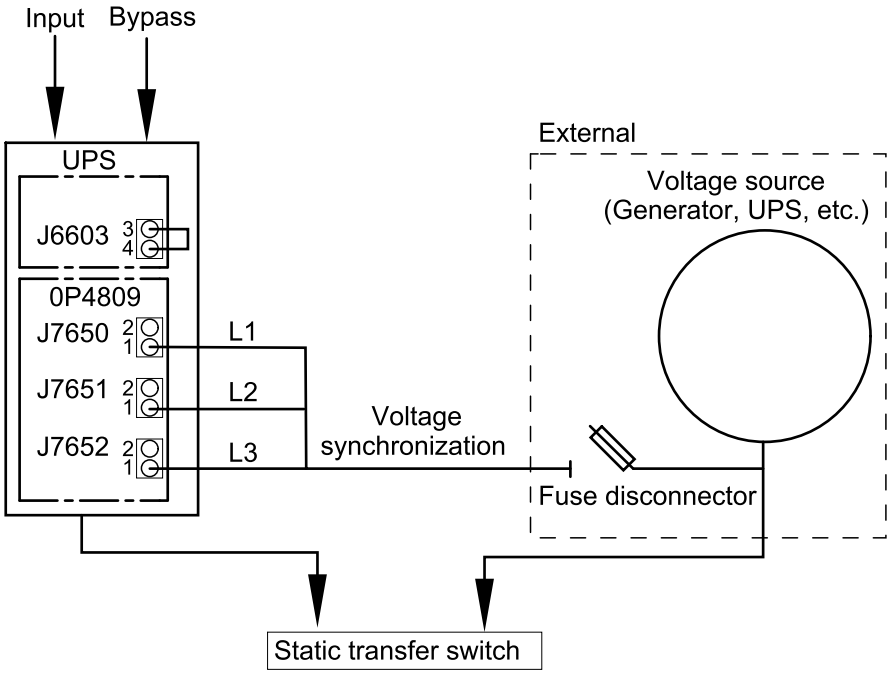

Signal Cable Connections for Advanced Dual UPS Synchronization

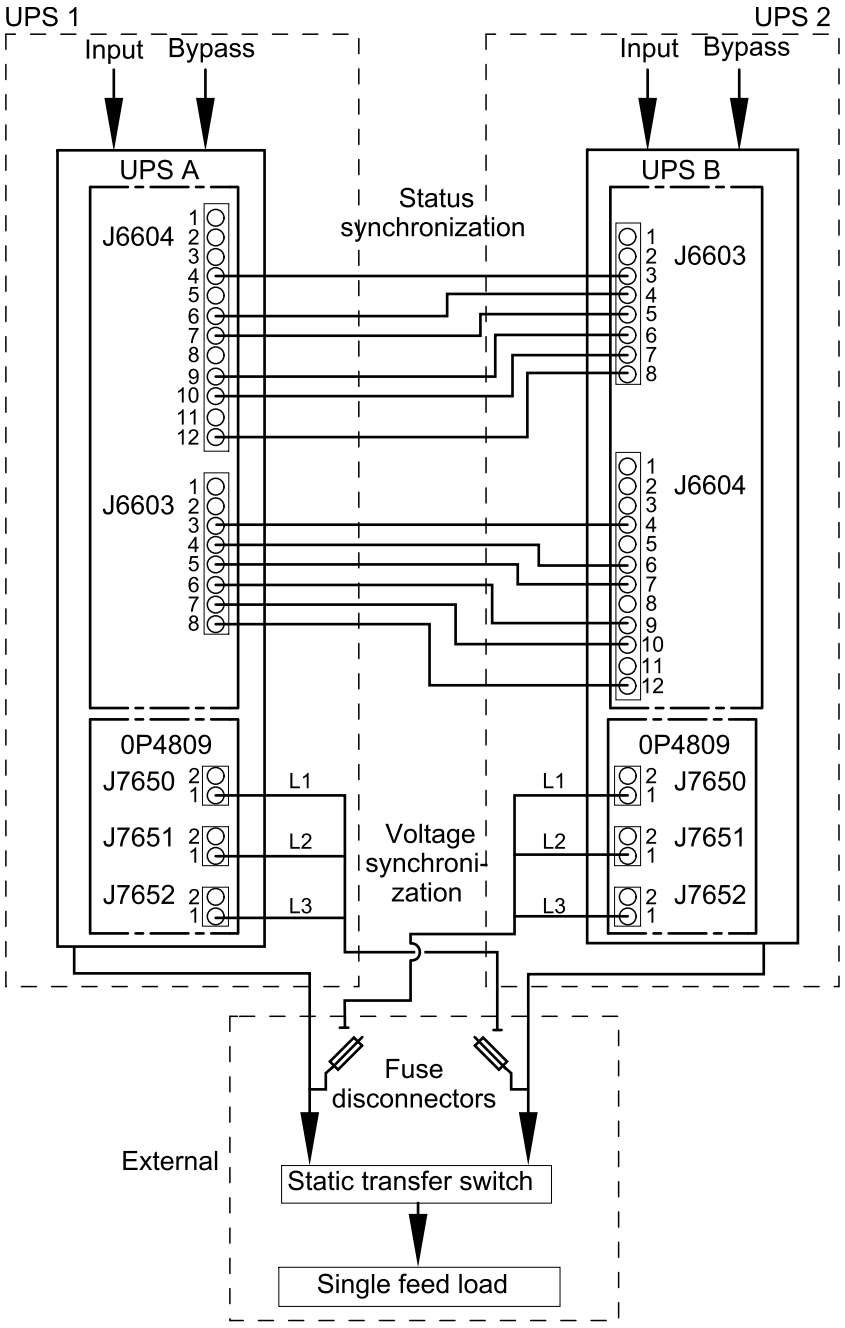

Signal Cable Connections for Advanced Dual UPS Synchronization in a Parallel UPS System with Fixed Sync Master

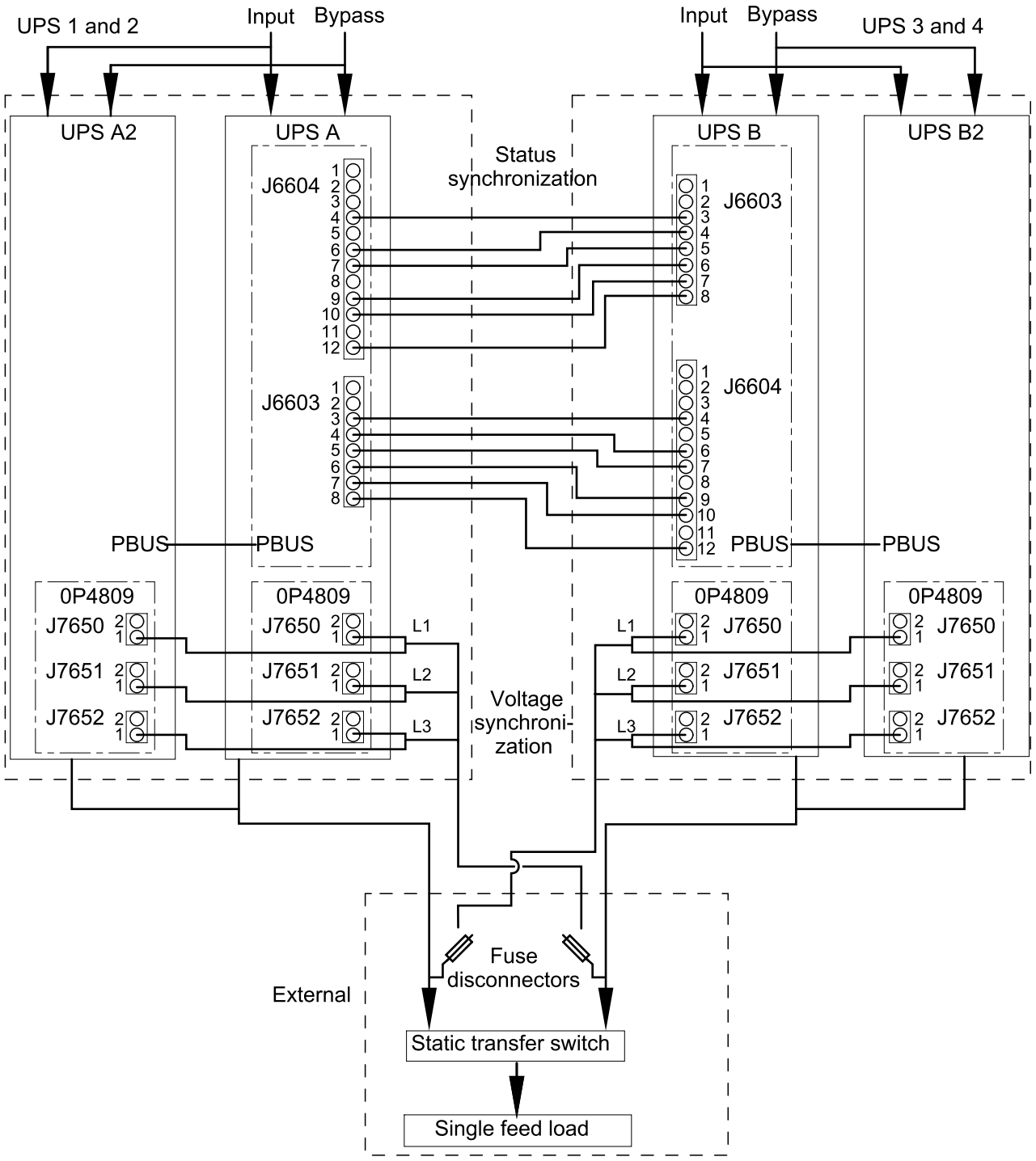

5. Reinstall the transparent protection cover on the external synchronization board 0P4809 after signal cabling is completed.

⚠⚠DANGER

HAZARD OF ELECTRIC SHOCK, EXPLOSION, OR ARC FLASH

The transparent protection cover must be installed over the external synchronization board 0P4809.

Failure to follow these instructions will result in death or serious injury.

6. Add a label (not provided) on the transparent protection cover with the identification number for the external synchronization fuse disconnector.

7. Reinstall the two inner doors:
   a. Lift the inner doors onto the hinges.
   b. Reinstall the nut and brackets in both sides.
   c. Reconnect the signal cable connectors.
   d. Close the inner doors and reinstall the 13 screws.
   e. Reinstall the L-shaped part in both sides with the two screws.

Front View

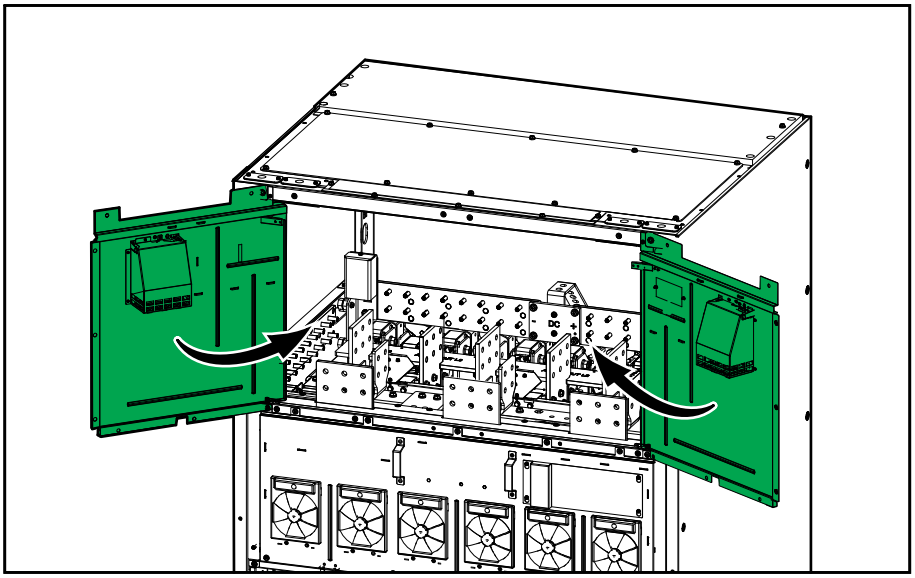

Connect the Signal Cables

⚠CAUTION

RISK OF EQUIPMENT DAMAGE

All Class 2/SELV signal cables shall be double insulated cables and minimum rated for 30 VDC. All non-Class 2/non-SELV signal cables shall be double insulated cables and minimum rated for 600 VAC.

Failure to follow these instructions can result in injury or equipment damage.

Recommended Signal Cable Size

Distance from UPS to equipment	Recommended signal cable size
0-50 m	0.5 mm^2
50-100 m	0.75 mm^2
100-200 m	1 mm^2

Front View of Signal Cable Routing

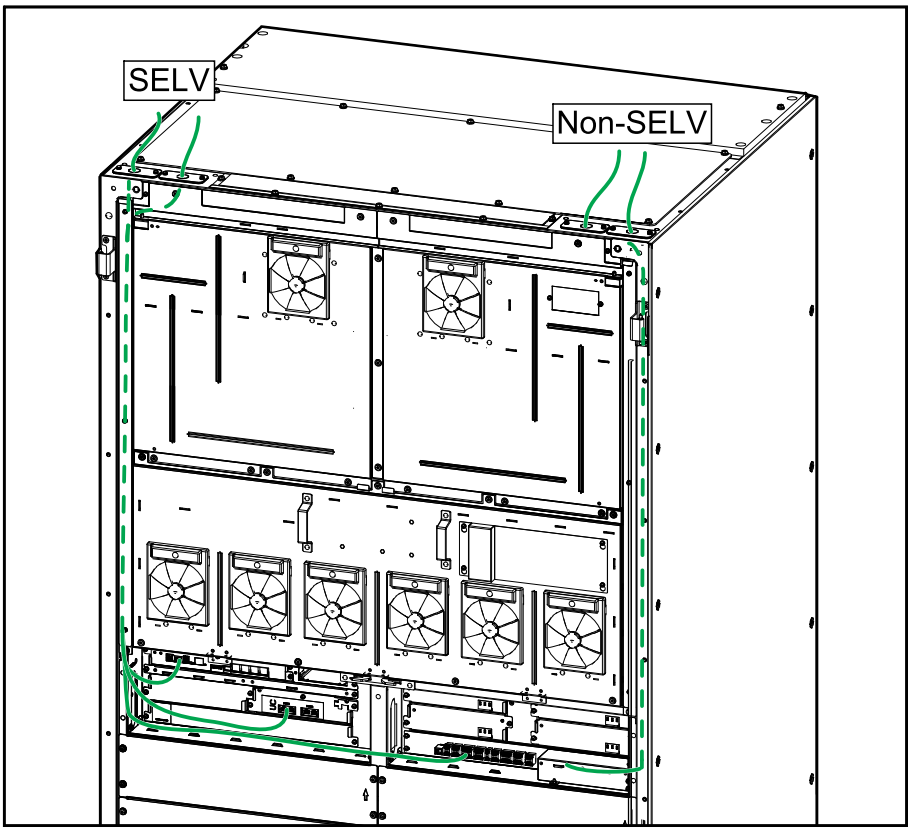

Front View of Signal Connection Terminals in the UPS

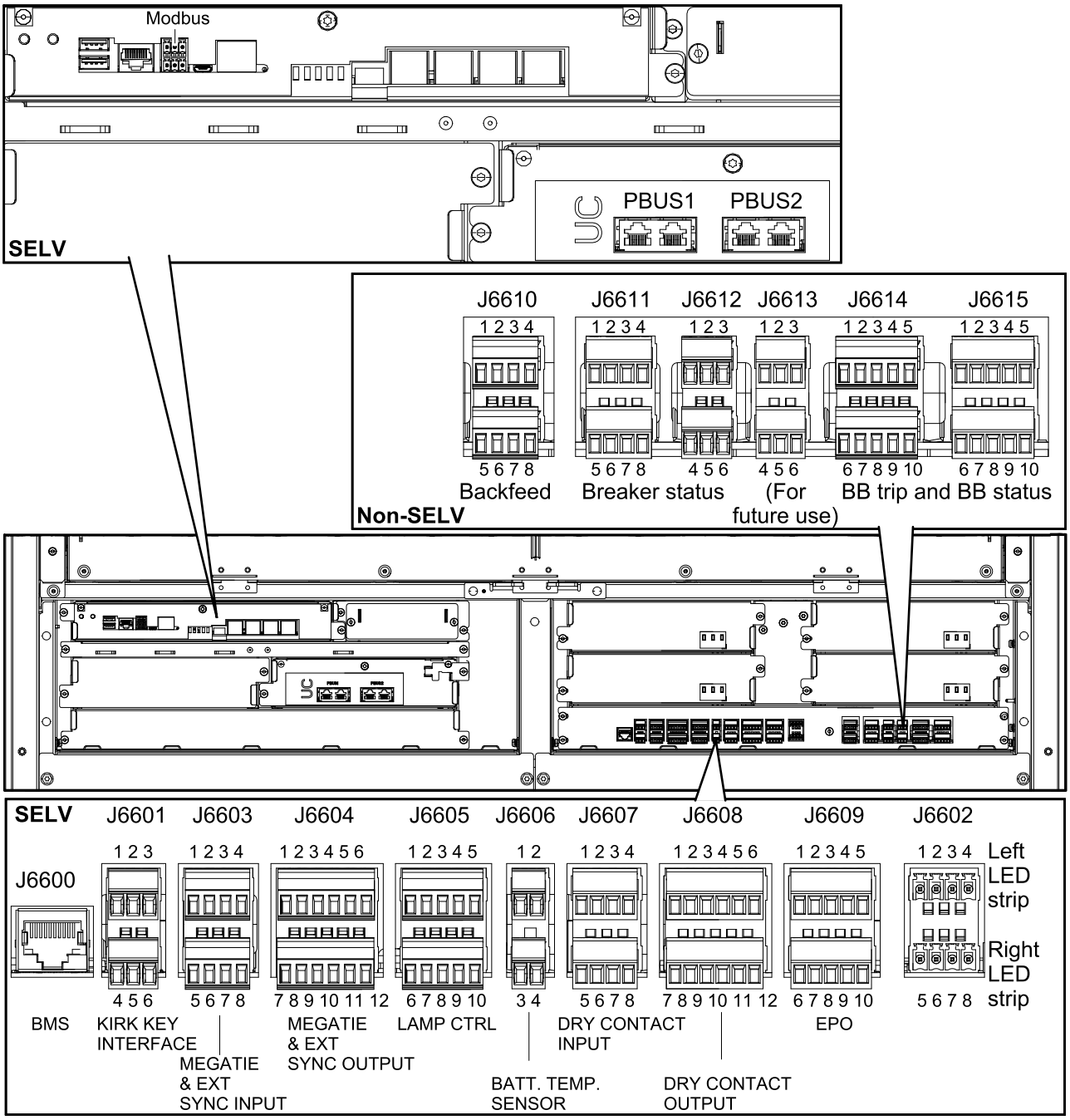

NOTE: Route the signal cables separately from the power cables and route the Class 2/SELV cables separately from the non-Class 2/non-SELV cables.

1. Connect the Class 2/SELV signal cables from the building EPO to terminal J6609 in the UPS according to one of the options below.

   The EPO circuit is considered Class 2/SELV. Class 2/SELV circuits must be isolated from the primary circuitry. Do not connect any circuit to the EPO terminal block unless it can be confirmed that the circuit is Class 2/SELV.

   EPO Configurations (Terminal J6609, 1-10)

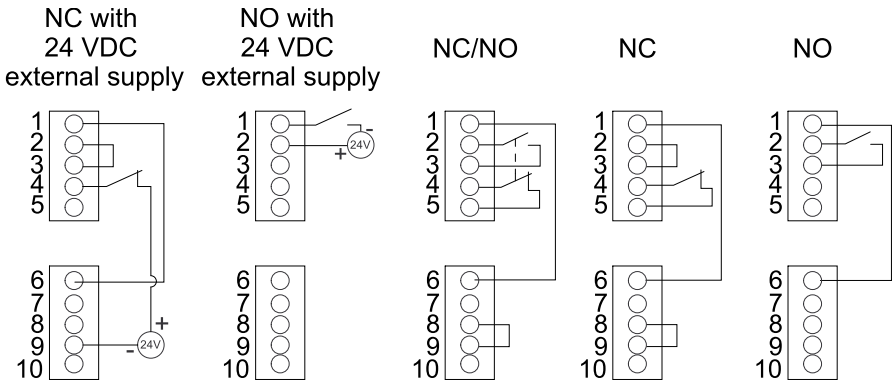

   The EPO input supports 24 VDC.

   NOTE: The default setting for the EPO activation is to turn off the inverter. If you want the EPO activation to transfer the UPS into forced static bypass operation instead, please contact Schneider Electric.

2. Connect the Class 2/SELV signal cables to the input contacts in the UPS.

   Do not connect any circuit to the input contacts unless it can be confirmed that the circuit is Class 2/SELV.

   The input contacts support 24 VDC 10 mA. All circuits connected must have the same 0 V reference.

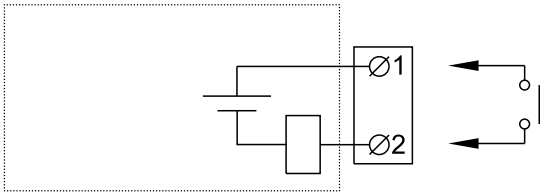

Name	Description	Location
IN _1 (input contact 1)	Configurable input contact	Terminal J6607: 1-2
IN _2 (input contact 2)		Terminal J6607: 3-4
IN _3 (input contact 3)		Terminal J6607: 5-6
IN _4 (input contact 4)		Terminal J6607: 7-8

3. Connect the Class 2/SELV signal cables to the output relays in the UPS.

   The output relays support 24 VAC/VDC 1 A. All external circuitry must be fused with maximum 1 A fast acting fuses.

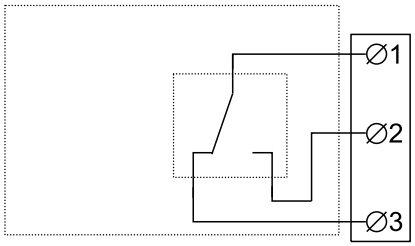

Name	Description	Location
OUT _1 (output relay 1)	Configurable output relay	Terminal J6608: 1-3 for normally closed (NC), 1-2 for normally open (NO)
OUT _2 (output relay 2)		Terminal J6608: 4-6 for normally closed (NC), 4-5 for normally open (NO)
OUT _3 (output relay 3)		Terminal J6608: 7-9 for normally closed (NC), 7-8 for normally open (NO)
OUT _4 (output relay 4)		Terminal J6608: 10-12 for normally closed (NC), 10-11 for normally open (NO)

4. Connect the signal cables from the auxiliary products to the UPS. Follow the instructions in the auxiliary product manuals.

Connect the Signal Cables from Switchgear and Third-Party Auxiliary Products

⚠CAUTION

RISK OF EQUIPMENT DAMAGE

All Class 2/SELV signal cables shall be double insulated cables and minimum rated for 30 VDC. All non-Class 2/non-SELV signal cables shall be double insulated cables and minimum rated for 600 VAC.

Failure to follow these instructions can result in injury or equipment damage.

Recommended Signal Cable Size

Distance from UPS to equipment	Recommended signal cable size
0-50 m	0.5 mm^2
50-100 m	0.75 mm^2
100-200 m	1 mm^2

Front View of Signal Cable Routing

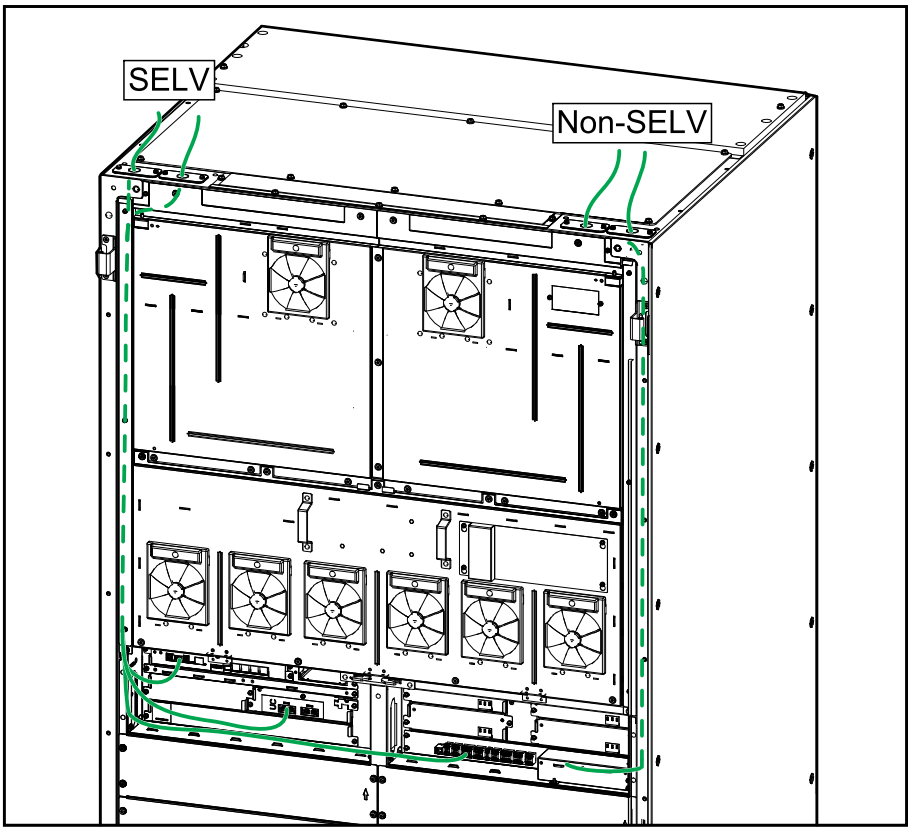

Front View of Signal Connection Terminals in the UPS

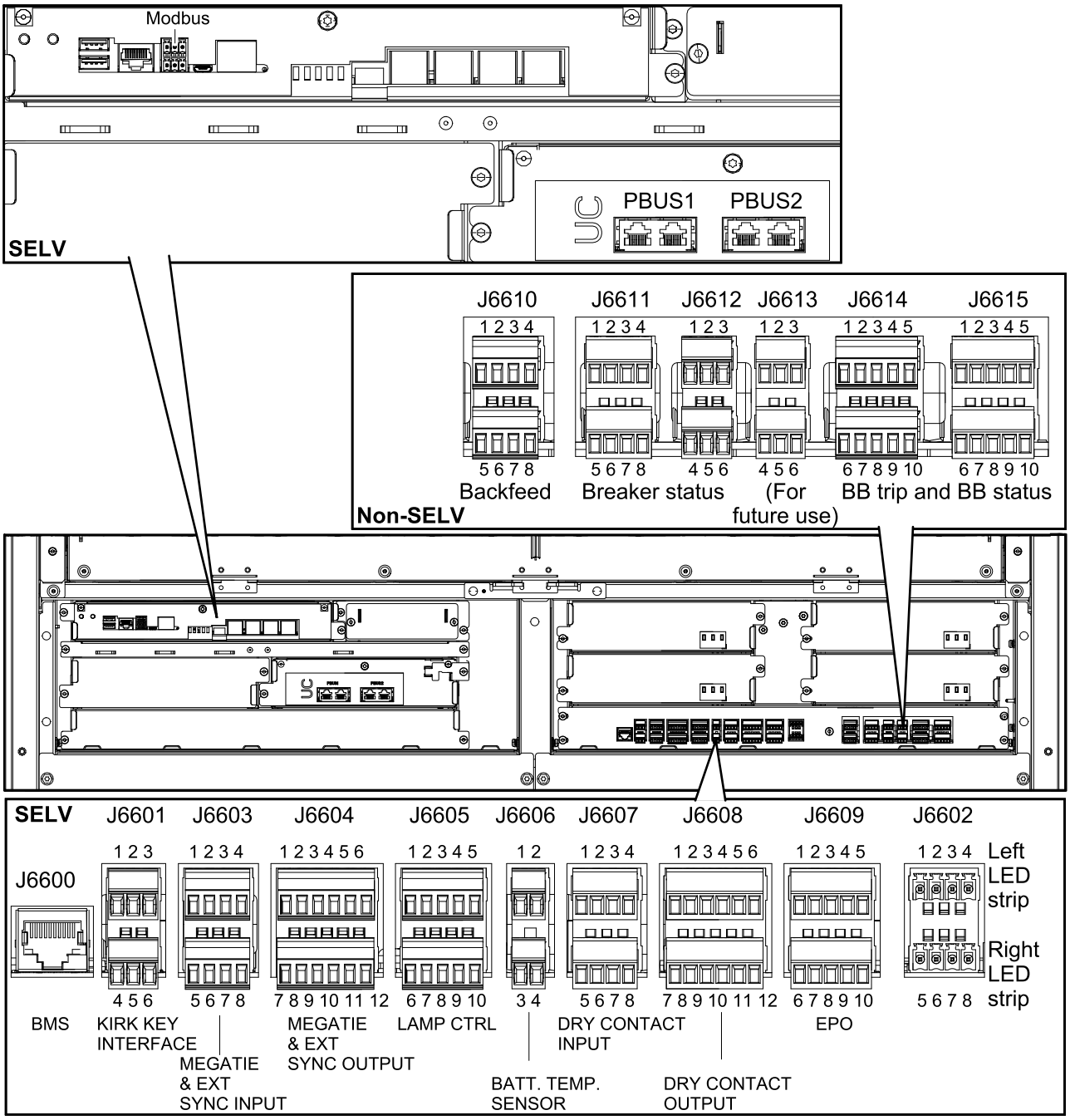

NOTE: Route the signal cables separately from the power cables and route the Class 2/SELV cables separately from the non-Class 2/non-SELV cables.

1. Install the temperature sensor(s) 0M-1160 provided with the UPS in the battery solution. Follow the instructions provided with your battery solution to place the temperature sensor in the battery solution. If nothing is specified, install the temperature sensor in the top corner of the battery cabinet.

⚠WARNING

HAZARD OF FIRE

Position the temperature sensor as described to ensure correct temperature measurements.

Failure to follow these instructions can result in death, serious injury, or equipment damage.

2. Route the battery temperature sensor cables from the battery solution to the UPS and connect as shown.

   NOTE: Two temperature sensors 0M-1160 are provided with the UPS.

   NOTE: The battery temperature sensor cables are considered Class 2/SELV. Class 2/SELV circuits must be isolated from the primary circuitry.

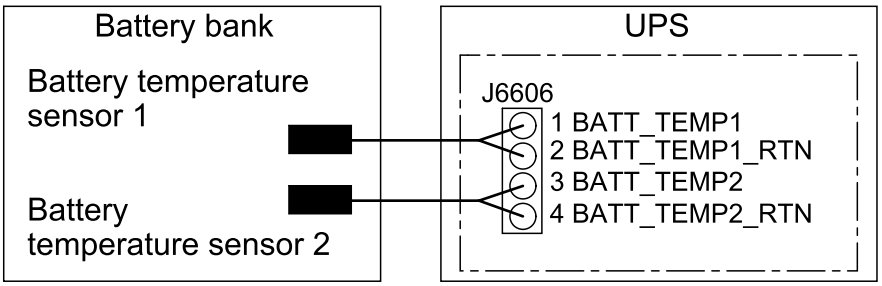

3. Connect signal cables from the disconnect device indicator lights in your switchgear to terminal J6605 in the UPS.

   NOTE: The disconnect device indicator light circuit is considered Class 2/SELV. Class 2/SELV circuits must be isolated from the primary circuitry. Do not connect any circuit to the disconnect device indicator light terminals unless it can be confirmed that the circuit is Class 2/SELV.

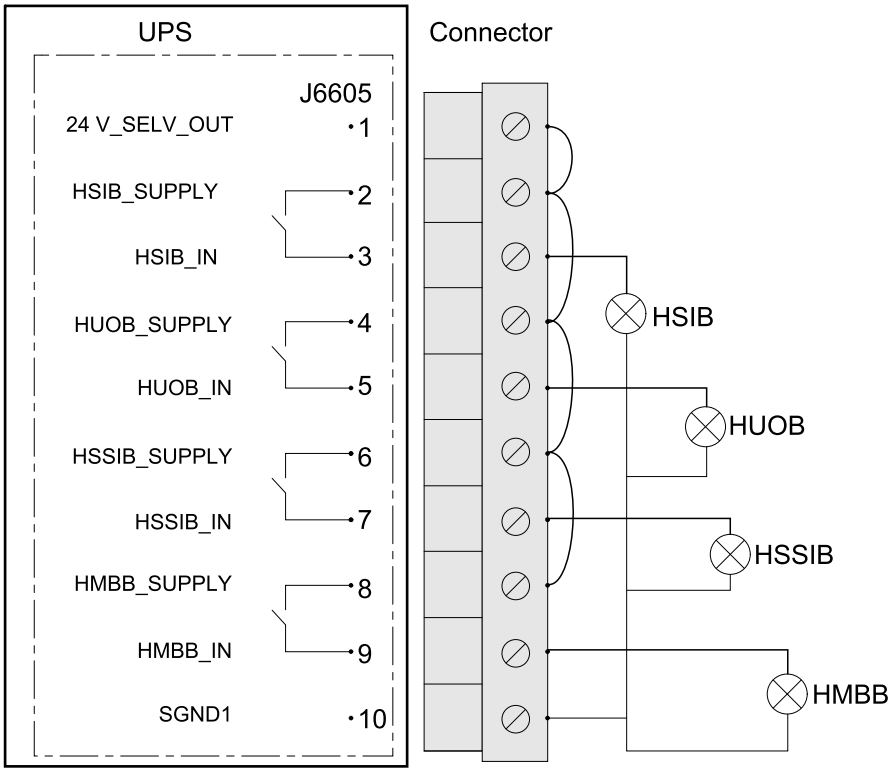

4. Connect the non-Class 2/non-SELV signal cables from the battery disconnect device(s) in your battery solution for shunt trip or undervoltage (UV) trip connection to the UPS. Follow the illustration for connection with internal 24 VDC supply. The UPS can connect to and monitor up to four battery disconnect devices.
   a. Connect the signal cables from battery disconnect device 1 to terminal J6614, 1-5 in the UPS.
   b. Connect the signal cables from battery disconnect device 2 to terminal J6614, 6-10 in the UPS.
   c. Connect the signal cables from battery disconnect device 3 to terminal J6615, 1-5 in the UPS.
   d. Connect the signal cables from battery disconnect device 4 to terminal J6615, 6-10 in the UPS.

Battery Disconnect Device UV Trip Connection with Internal 24 VDC Supply

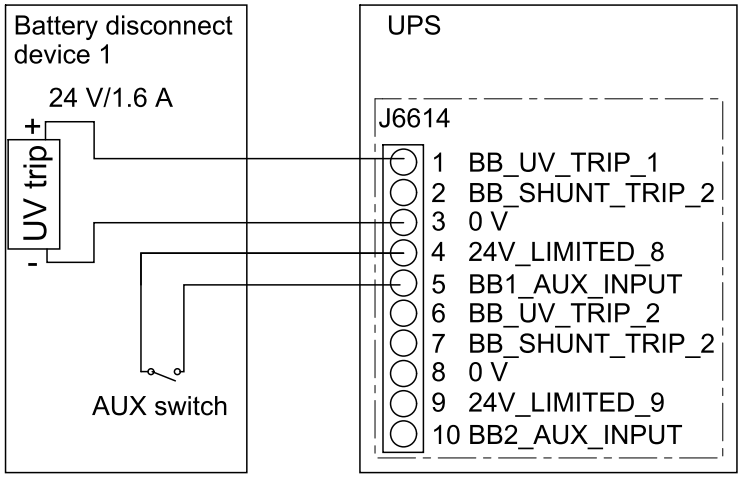

Battery Disconnect Device Shunt Trip Connection with Internal 24 VDC Supply

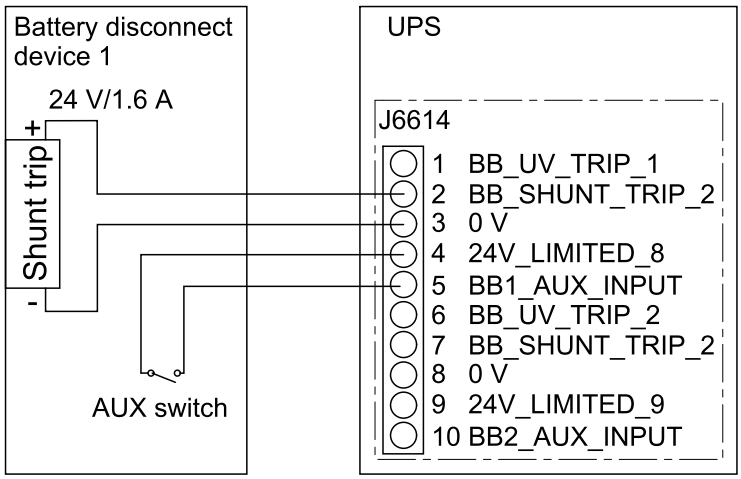

5. Connect signal cables from AUX switches in your switchgear to the UPS.

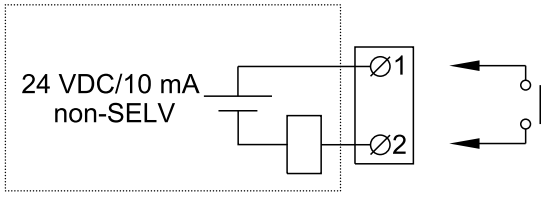

Terminal number	Function	Connection
J6614, 4-5	BB1 (battery disconnect device 1)	Connect to normally open (NO) AUX switch in battery disconnect device number 1.
J6614, 9-10	BB2 (battery disconnect device 2)	Connect to normally open (NO) AUX switch in battery disconnect device number 2.
J6615, 4-5	BB3 (battery disconnect device 3)	Connect to normally open (NO) AUX switch in battery disconnect device number 3.
J6615, 9-10	BB4 (battery disconnect device 4)	Connect to normally open (NO) AUX switch in battery disconnect device number 4.
J6612, 1 and 4	UOB_RED (redundant AUX switch in unit output disconnect device)	Connect to redundant AUX switch in unit output disconnect device UOB.
J6612, 2 and 5	Grid interactive UPS feature: Force UPS into battery operation	Connect to normally open (NO) input contact used for grid interactive UPS feature (fast frequency response). Contact Schneider Electric for details and setup of this feature.
J6612, 3 and 6	SIB (system isolation disconnect device)	Connect to normally open (NO) AUX switch in system isolation disconnect device SIB for parallel system. SIB must contain an AUX switch for each connected UPS.
J6611, 4 and 8	UOB (unit output disconnect device)	Connect to normally open (NO) AUX switch in unit output disconnect device UOB.
J6611, 2 and 6	SSIB (static switch input disconnect device)	Connect to normally open (NO) AUX switch in static switch input disconnect device SSIB. SSIB must contain an AUX switch for each connected UPS.
J6611, 1 and 5	UIB (unit input disconnect device)	Connect to normally open (NO) AUX switch in unit input disconnect device UIB. UIB must contain an AUX switch for each connected UPS.
J6611, 3 and 7	MBB (maintenance bypass disconnect device)	Connect to normally closed (NC) AUX switch in maintenance bypass disconnect device MBB. MBB must contain an AUX switch for each connected UPS.
J6610, 1-8	EXT BF (external backfeed disconnect device)	See Backfeed Protection, page 106.

6. **Only for solenoid key release unit (SKRU)**: Connect signal cables from the solenoid key release unit in your switchgear to the UPS.
   a. Connect the signal cables between the solenoid key release unit and the UPS terminal J6601, as shown.
   b. Add a jumper between pin 3 and 5 in J6601.

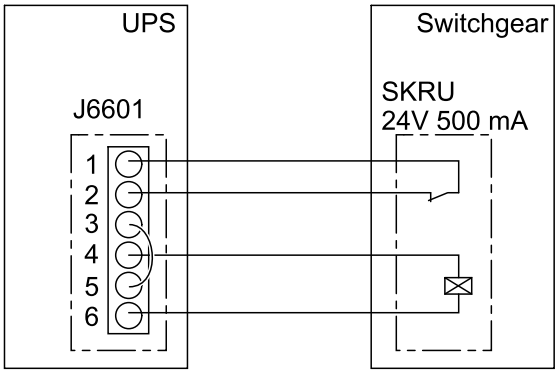

NOTE: SKRU presence must be configured by Schneider Electric Service at start-up.

NOTE: Contacts are closed when the key is trapped.

Connect the External Communication Cables

1. Connect the external communication cables to the ports in the system level controller.

Front View of the UPS

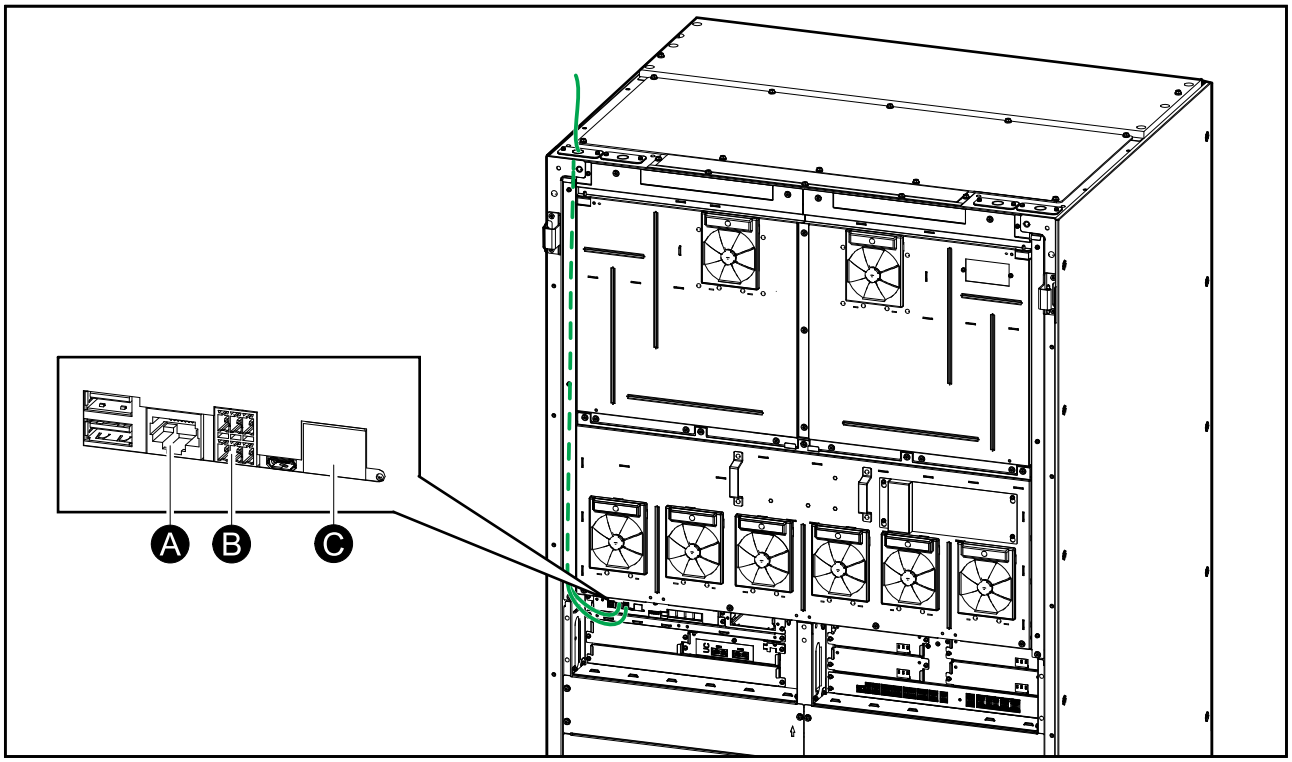

A. Universal I/O port for built-in network management card.

B. Modbus port for built-in network management card.

C. Network port for built-in network management card. Use a shielded network cable.

NOTE: Check that you are connecting to the correct port to avoid network communication conflicts.

Connect the Modbus Cables

1. Connect the Modbus cables to the UPS(s). Use either 2-wire or 4-wire connection.

Front View

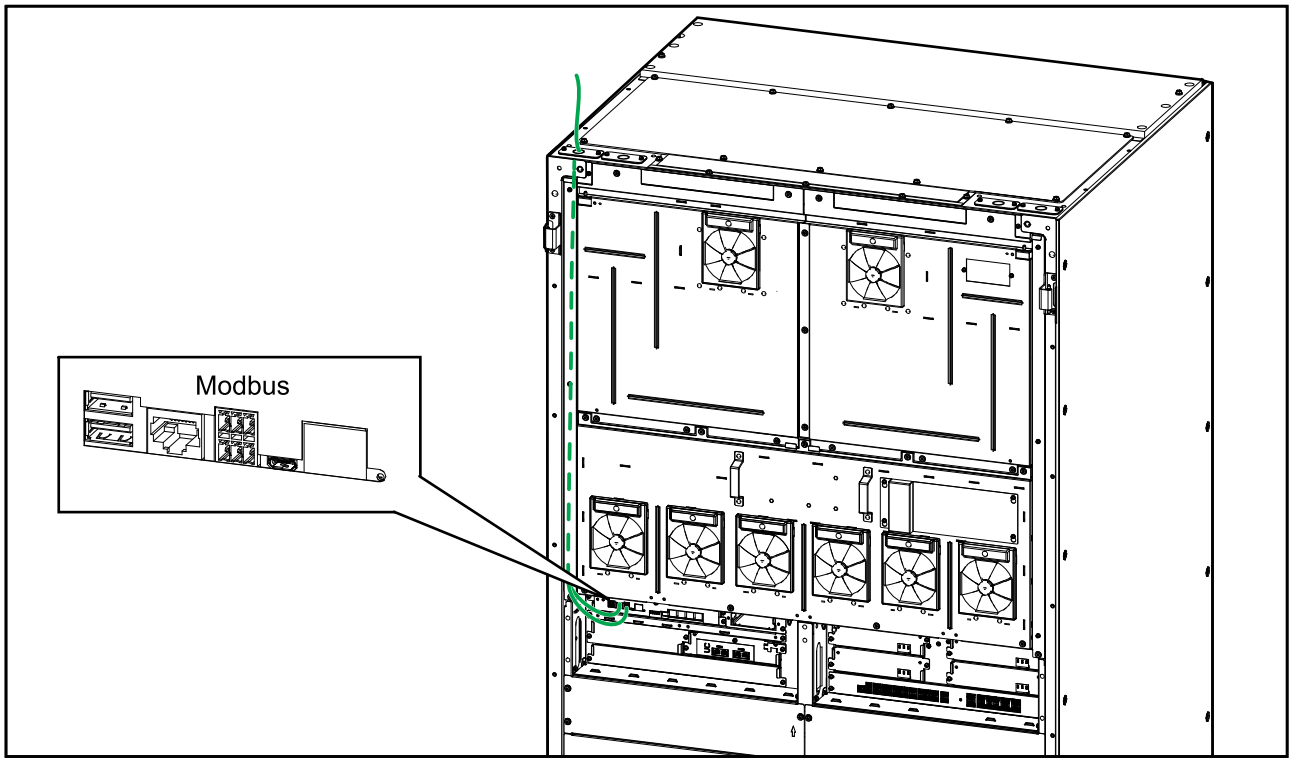

- All Modbus signal cables shall be double insulated/jacket cable and minimum rated for 30 VDC.
- Shielded twisted pair cables must be used for Modbus connections. The shield connection to the ground must be as short as possible (ideally below 1 cm). The cable shield must be connected to the Ch Gnd pin on each device.
- Wiring should be done in accordance with local wiring codes.
- Route signal cables separately from power cables to ensure sufficient isolation.
- The Modbus port is galvanically isolated with the Com pin as ground reference.

  NOTE: The RS-485 interface is opto-isolated and requires the **Com** (common or ground) line to be interconnected across all devices on the RS-485 network; Otherwise, the signal voltage reference may float, increasing susceptibility to noise and resulting in communication errors.

Example: 2-Wire Connection with Two UPSs

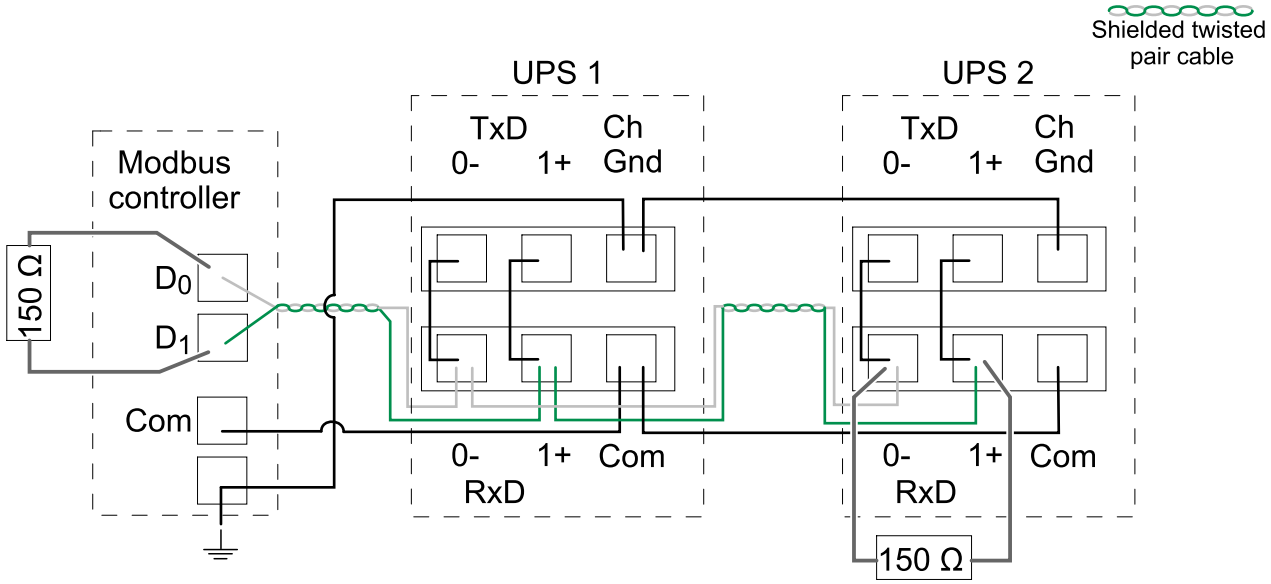

Example: 4-Wire Connection with Two UPSs

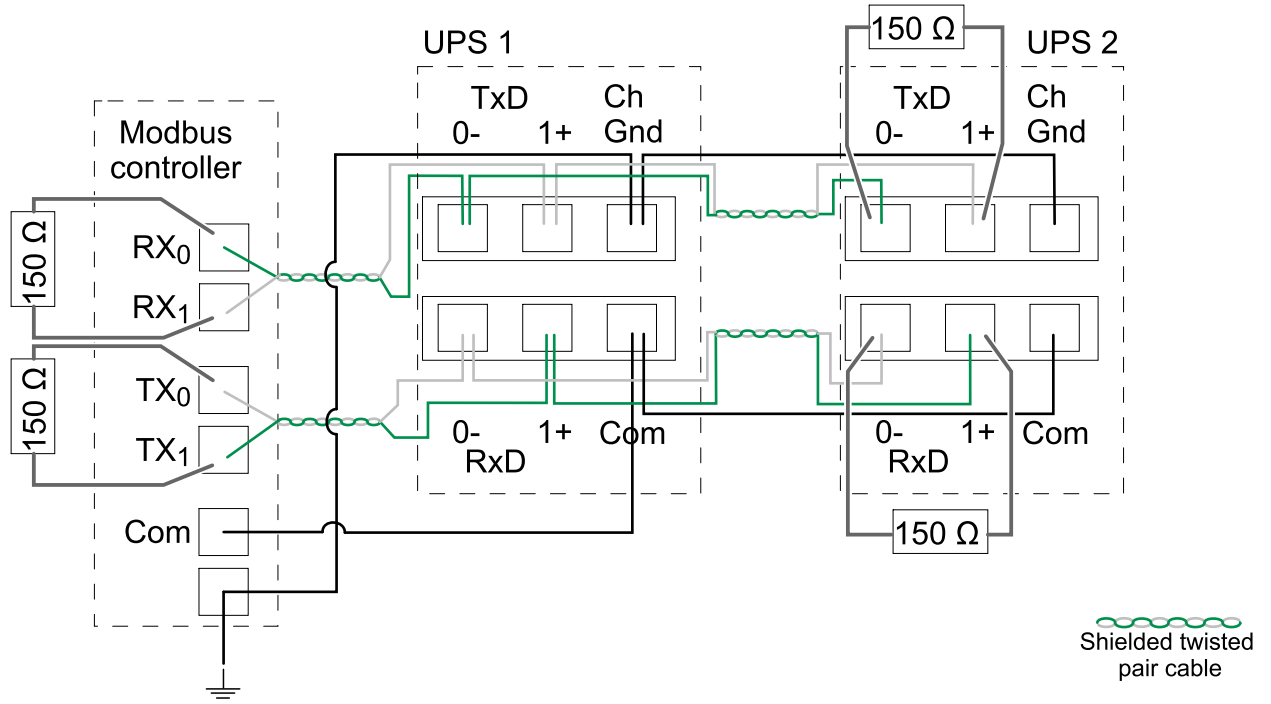

2. Install 150 Ohm termination resistors at each end of each bus (2-wire connection:TxD0 and TxD1; 4-wire connection: TxD0 and TxD1, RxD0 and RxD1) if the buses are very long and operate at high data rates. Busses under 610 meters at 9600 baud or under 305 meters at 19200 baud should not require termination resistors.

Connect the PBUS Cables

⚠CAUTION

RISK OF EQUIPMENT DAMAGE

All PBUS cables shall be double insulated cables and minimum rated for 30 VDC. It is recommended to use the PBUS cables provided by Schneider Electric.

Failure to follow these instructions can result in injury or equipment damage.

1. Connect the provided PBUS 1 (white) and PBUS 2 (red) cables to the PBUS ports on the UPSs.

Front View

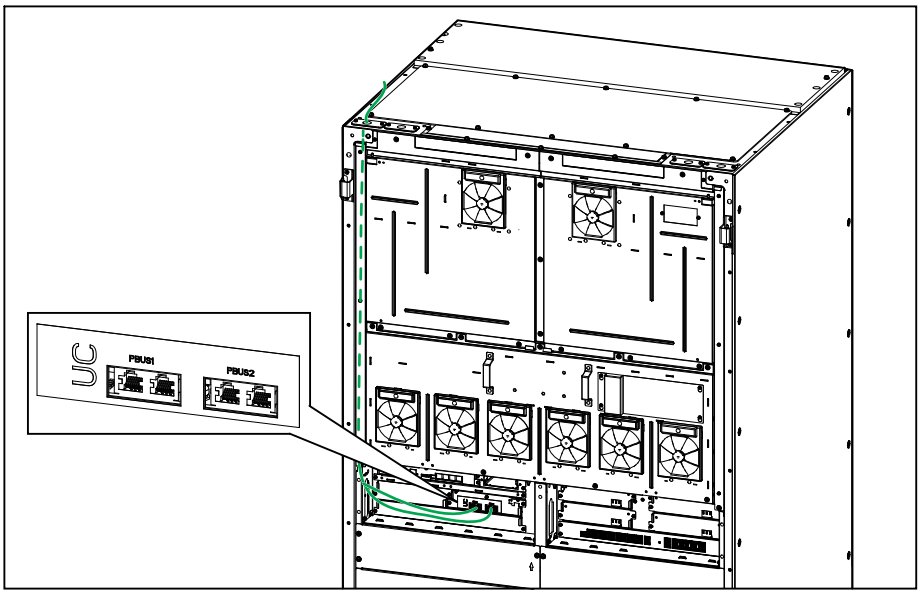

2. Mount termination plugs (T) in the unused connectors.

Example of System with Three UPSs in Parallel

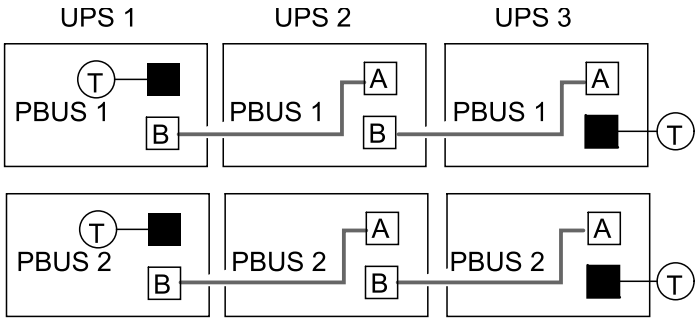

Install the Power Module(s)

The UPS can arrive with or without preinstalled power modules. Additional power modules are shipped separately and must be installed to reach the correct UPS kW rating.

⚠WARNING

HEAVY LOAD

Power modules are heavy (54 kg). Use appropriate lifting equipment and trained personnel to lift and handle the power module. It is recommended to use a scissor lifting cart or similar appropriate lifting equipment as shown in this procedure. See the specifications for the recommended scissor lifting cart below. If no lifting equipment is available, three persons are required to lift and handle the power module.

Failure to follow these instructions can result in death, serious injury, or equipment damage.

Specifications for Recommended Scissor Lifting Cart

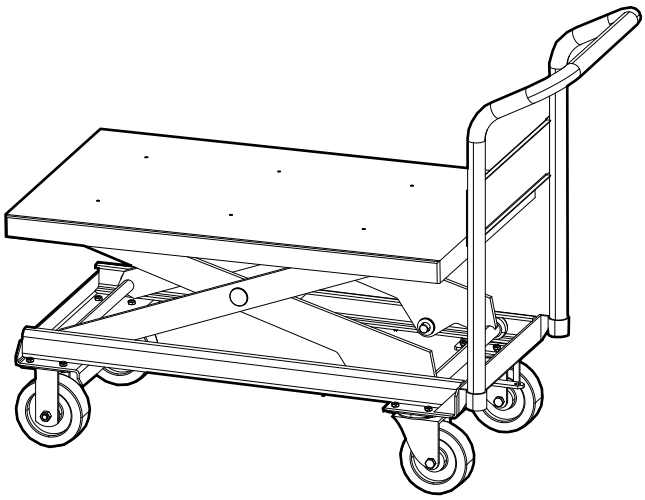

Lifting weight capacity: Minimum 80 kg
Lifting height range (lowest power module position to highest power module position): 100 mm to 650 mm
Table size: Minimum 700 mm x 450 mm
Material: Steel frame with solid wheels with brakes
CE/GS approved

⚠WARNING

HAZARD OF INJURY

Never stack the power modules on top of each other.

Failure to follow these instructions can result in death, serious injury, or equipment damage.

⚠CAUTION

HEAVY LOAD AND POTENTIALLY HOT SURFACE

Use protective gloves and safety shoes when handling the power modules.

Failure to follow these instructions can result in injury or equipment damage.

NOTE: Install the power modules starting from the bottom left slot. Install in the shown order, and start with the lowest number.

Front View

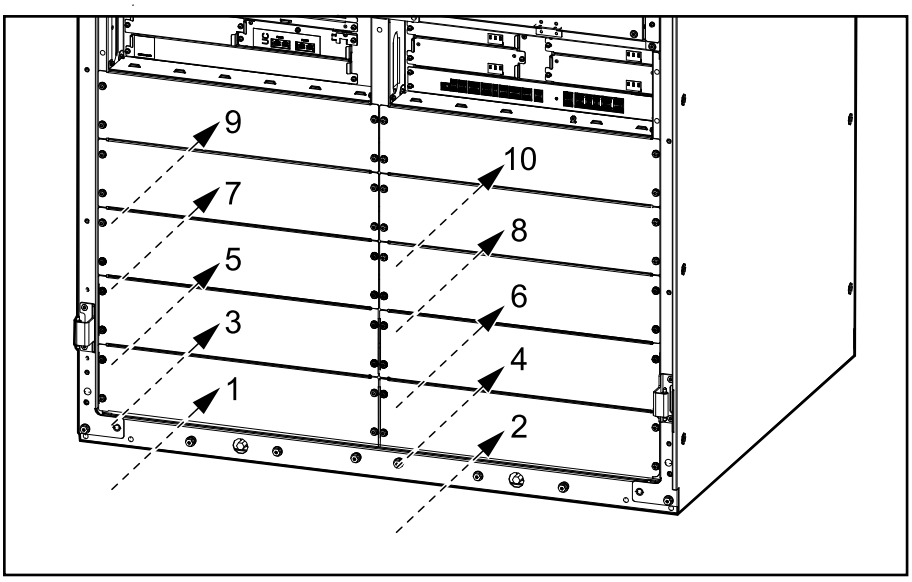

1. Remove the filler plate from the empty power module slot. Save the filler plate for future use. Save the screws for reuse.

Front View

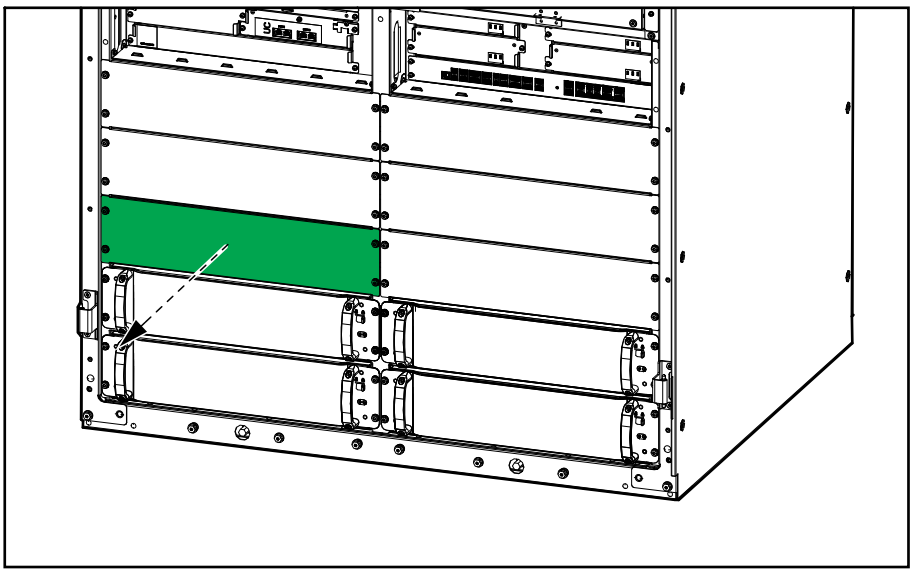

2. Use an appropriate lifting cart to lift the power module to the correct height and push the power module into the power module slot.

Front View

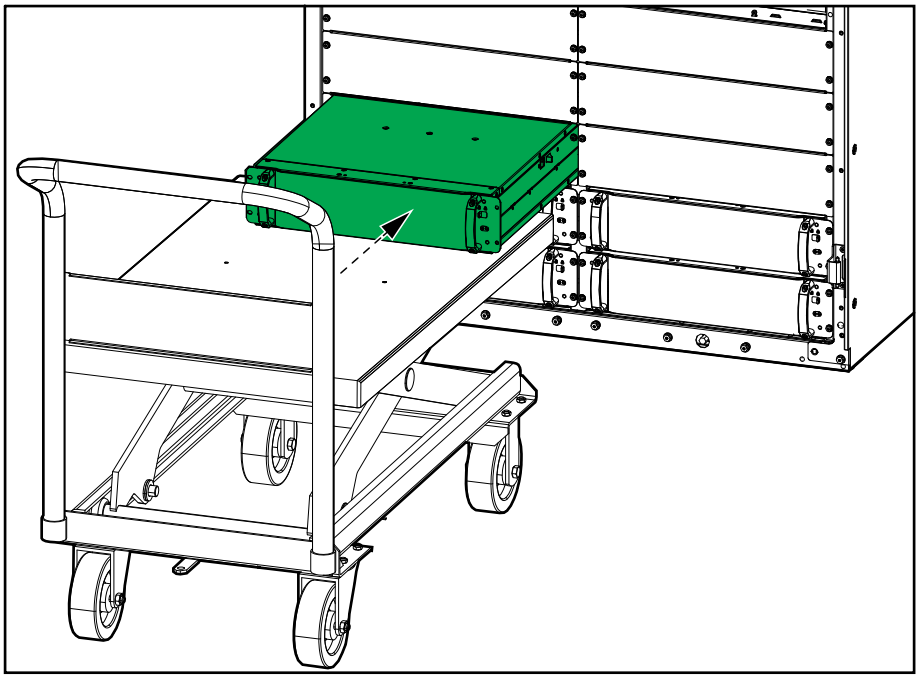

3. Install the four screws in the left and right sides of the power module. Reuse the screws from step 1.

Front View

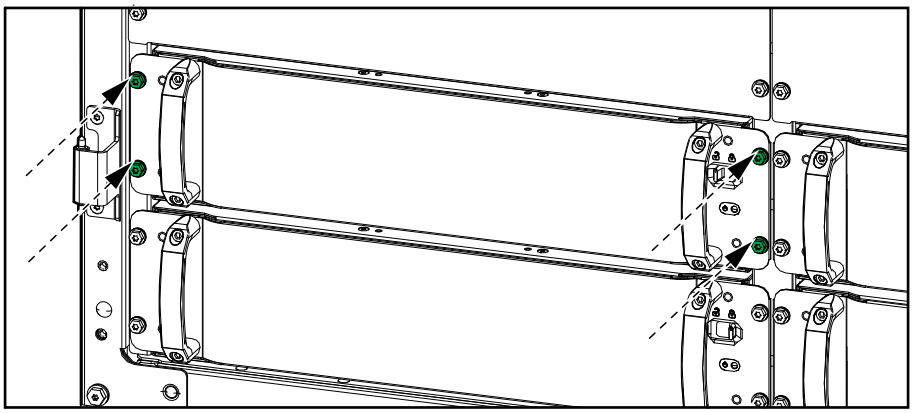

4. Set the enable switch on the power module to the ON (locked) position.

Front View

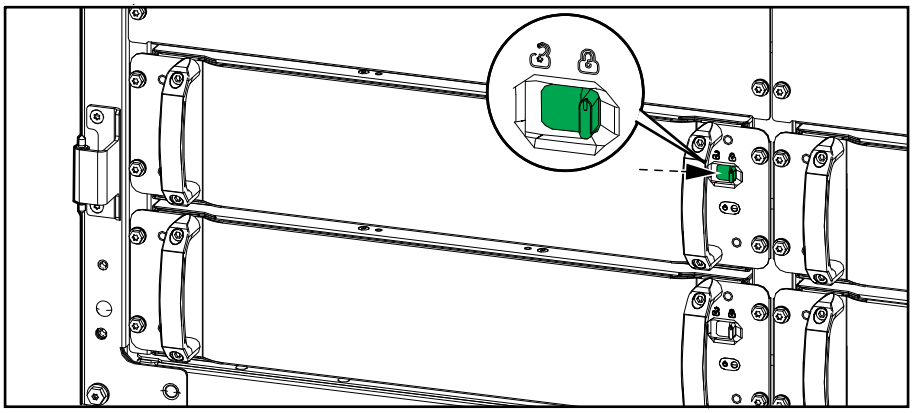

⚠⚠DANGER

HAZARD OF ELECTRIC SHOCK, EXPLOSION, OR ARC FLASH

All power module slots must have either a power module or a filler plate installed.

Failure to follow these instructions will result in death or serious injury.

Backfeed Protection

⚠⚠DANGER

HAZARD OF ELECTRIC SHOCK, EXPLOSION, OR ARC FLASH

Mandatory backfeed protection on bypass must be implemented by one of the following methods:

- Installation of upstream disconnect device with shunt trip connected to the UPS. See diagrams and instructions in Installation of Third Party Backfeed Protection, page 106.
- Installation of backfeed protection cabinet (GVXLOPT001) where the disconnect device is included. Follow the installation manual provided with the backfeed protection cabinet.

Failure to follow these instructions will result in death or serious injury.

Installation of Third Party Backfeed Protection

Connect the disconnect device shunt trip and AUX switch to the UPS as shown below. Use double insulated cables. Disconnect device shunt trip must be rated for 24 VDC nominal, inrush max 200 W. The cable supplying the shunt trip shall be a double insulated cable and rated for 600 VAC. The cables shall be sized taking the cable voltage drop and the recommendation of the shunt trip manufacturer into consideration.

Label 885-92858 (provided with the UPS) must be placed visible at the bypass upstream disconnect device.

⚠⚠DANGER

HAZARD OF ELECTRIC SHOCK, EXPLOSION, OR ARC FLASH

In systems where backfeed protection is not a part of the standard design, an automatic isolation device (such as a breaker, switch, or contactor with trip function, meeting the requirements of IEC62040-1 or UL1778 5th edition – depending on which standard apply to your local area), is required to be installed to prevent hazardous voltage or energy at the input terminals of the isolation device. The device must be rated and controlled according to the specifications in this manual.

Failure to follow these instructions will result in death or serious injury.

When the UPS input is connected through external isolators that, when opened, isolate the neutral or when the automatic backfeed isolation is provided external to the equipment, a label must be fitted at the UPS input terminals, and on all primary power isolators installed remotely from the UPS area and on external access points between such isolators and the UPS, by the user, displaying the following text (or equivalent in a language which is acceptable in the country in which the UPS system is installed):

⚠⚠DANGER

HAZARD OF ELECTRIC SHOCK, EXPLOSION, OR ARC FLASH

Risk of voltage backfeed. Before working on this circuit: Isolate the UPS and check for hazardous voltage between all terminals including the protective earth.

Failure to follow these instructions will result in death or serious injury.

UPS and Third Party Backfeed Protection – Single Mains

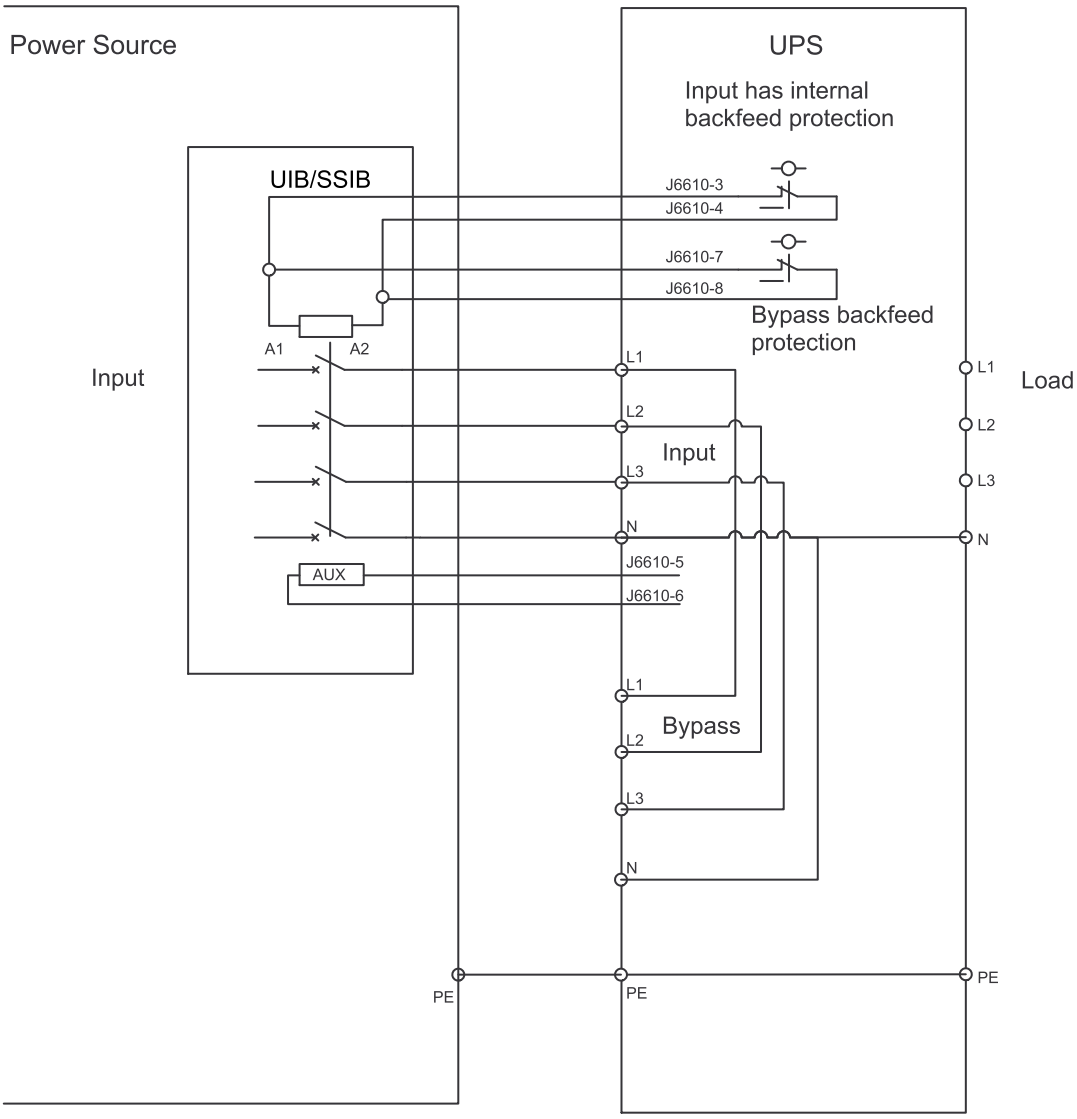

UPS and Third Party Backfeed Protection – Dual Mains

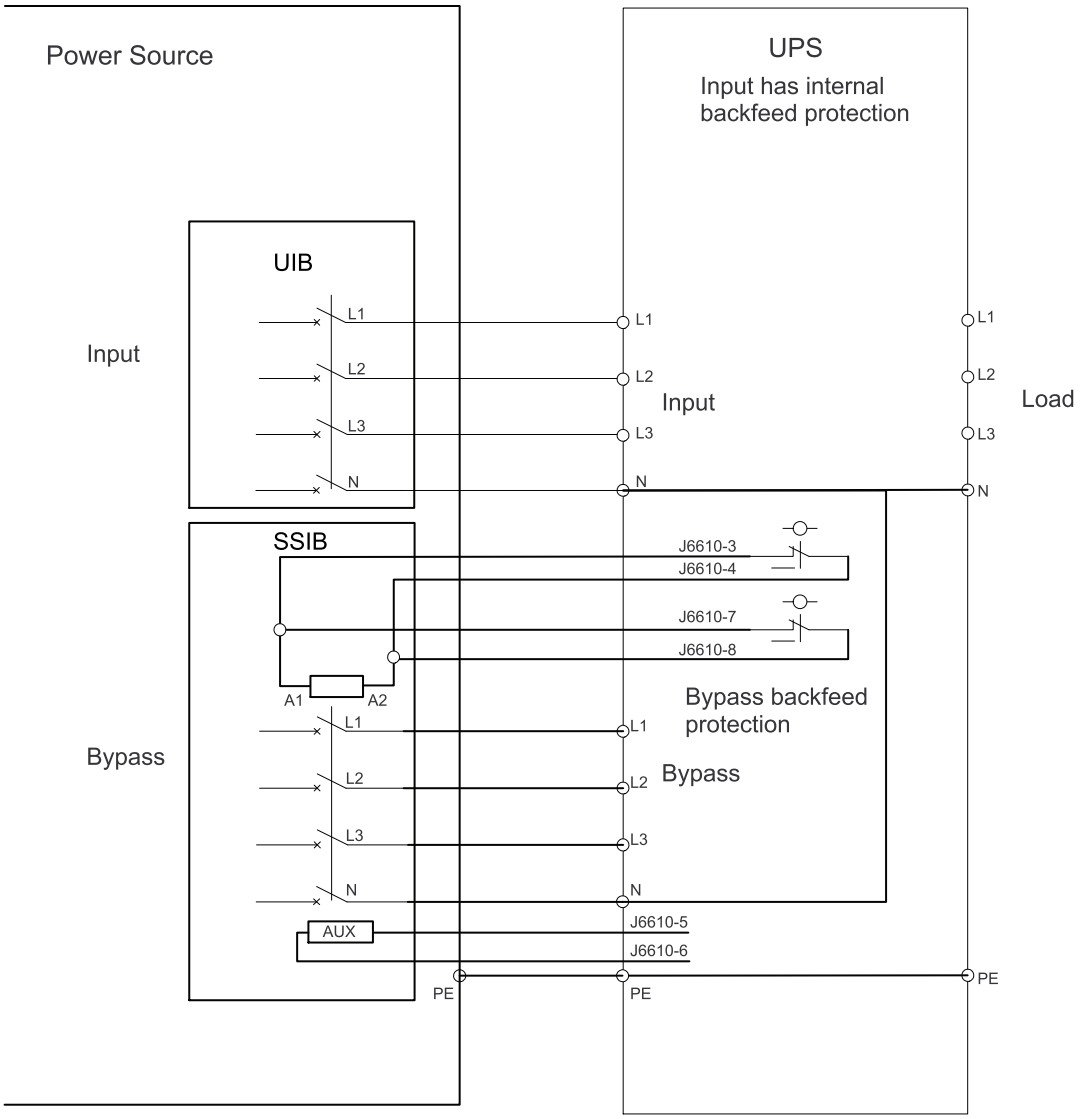

Final installation

1. Reinstall the long narrow covers and the non-Class 2/non-SELV protection cover over the non-Class 2/non-SELV signal terminals.

Front View

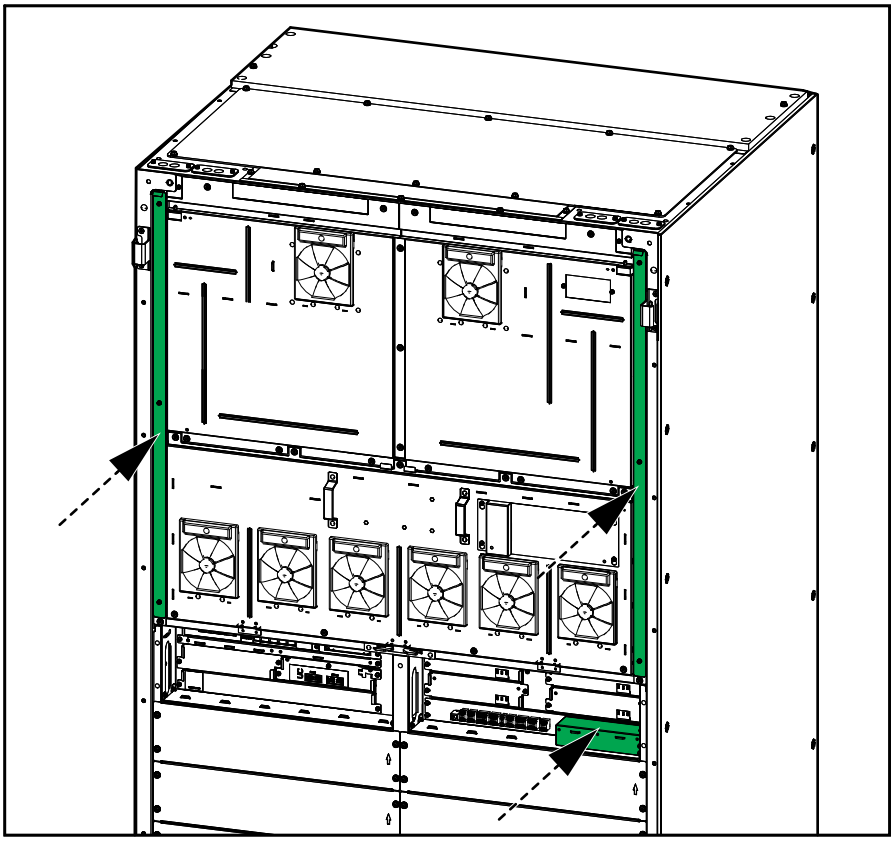

2. Remove the plywood plate and the dust protection label from the top of the UPS.

Front View

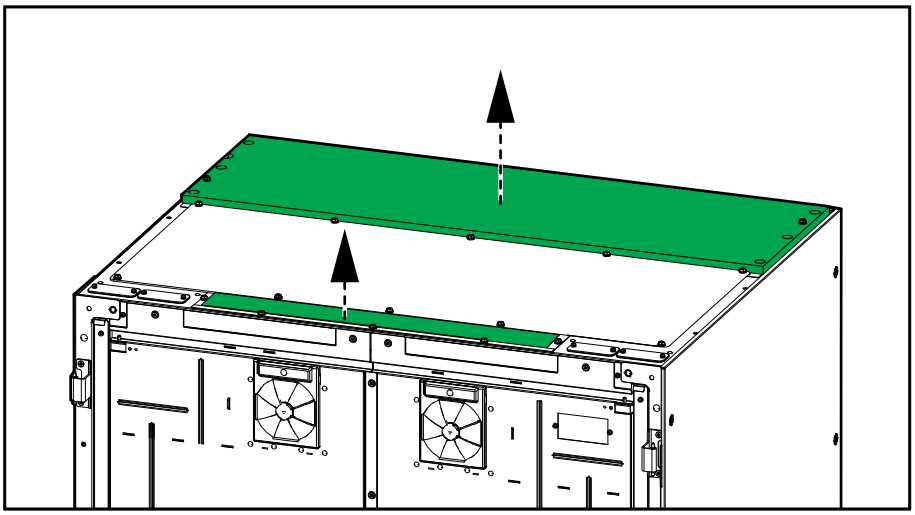

3. Reinstall the front doors.

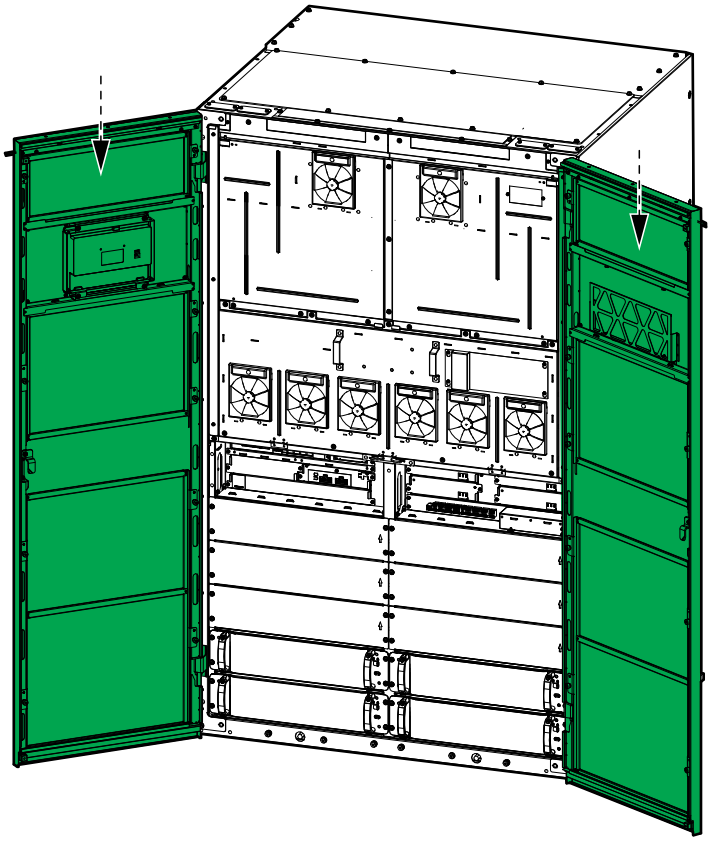

4. Reconnect the display signal cable and the two LED strip signal cables to the cabinet.

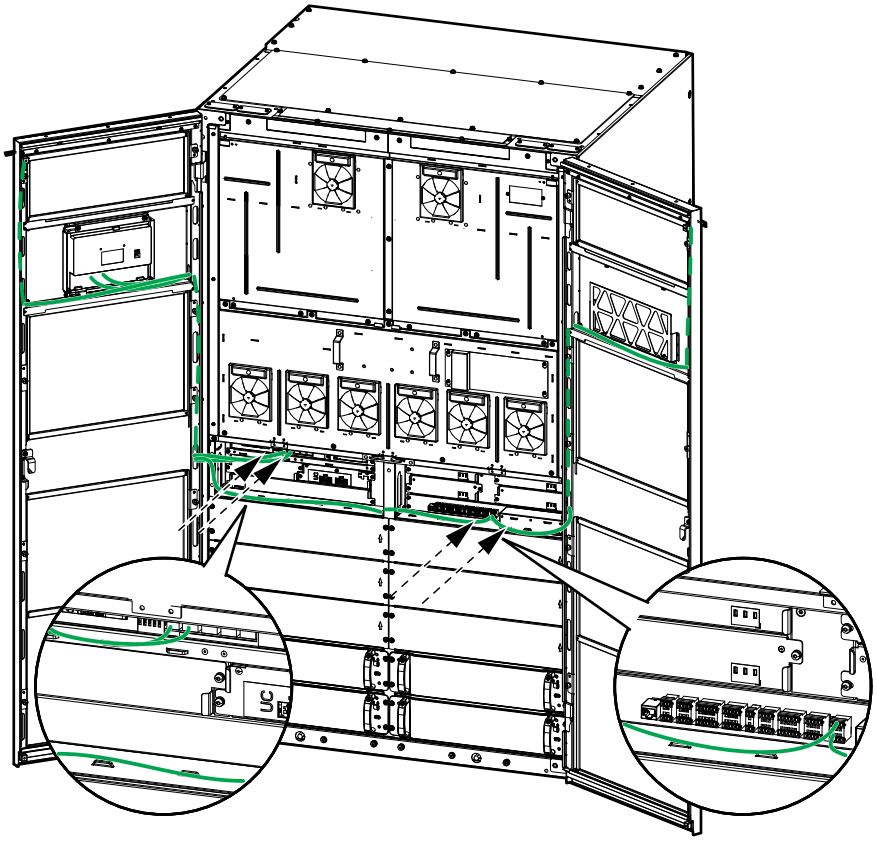

5. Close and lock the front doors.
6. Remove the protective film from the UPS display in the front door.

7. Cut the protective bag as indicated. Cover the UPS with the protective bag (marked (A) in the illustration) until commissioning to protect against dust and contaminants.

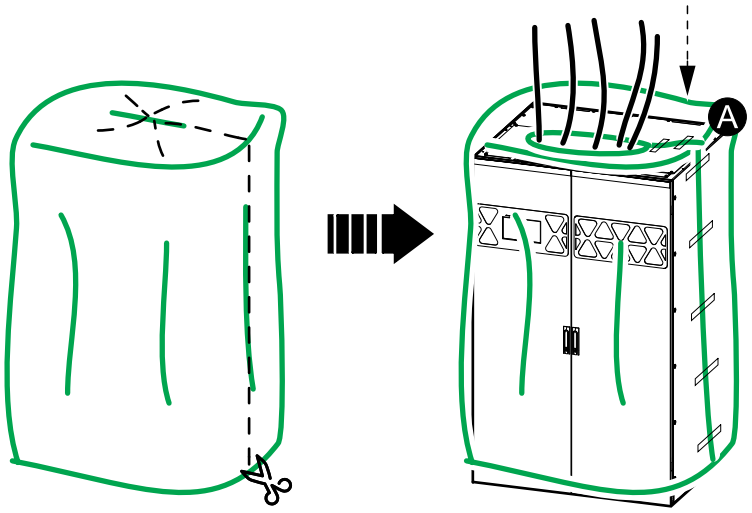

Decommission or Move the UPS to a New Location

1. Shut down the UPS completely – follow the instructions in the UPS operation manual.
2. Lockout/Tagout all disconnect devices in the switchgear in the OFF (open) position.
3. Lockout/Tagout all battery disconnect devices in the switchgear/battery solution in the OFF (open) position.
4. Open the front doors of the UPS.
5. Remove the plate from the measurement points. Save for reinstallation.

Front View

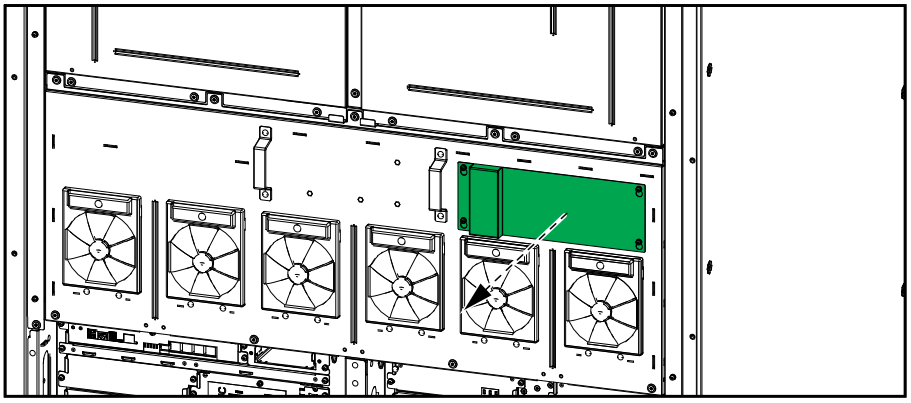

6. Measure for and verify ABSENCE of voltage with a multimeter probe through the holes in the transparent plate for input, bypass, output, neutral, and DC.

Front View

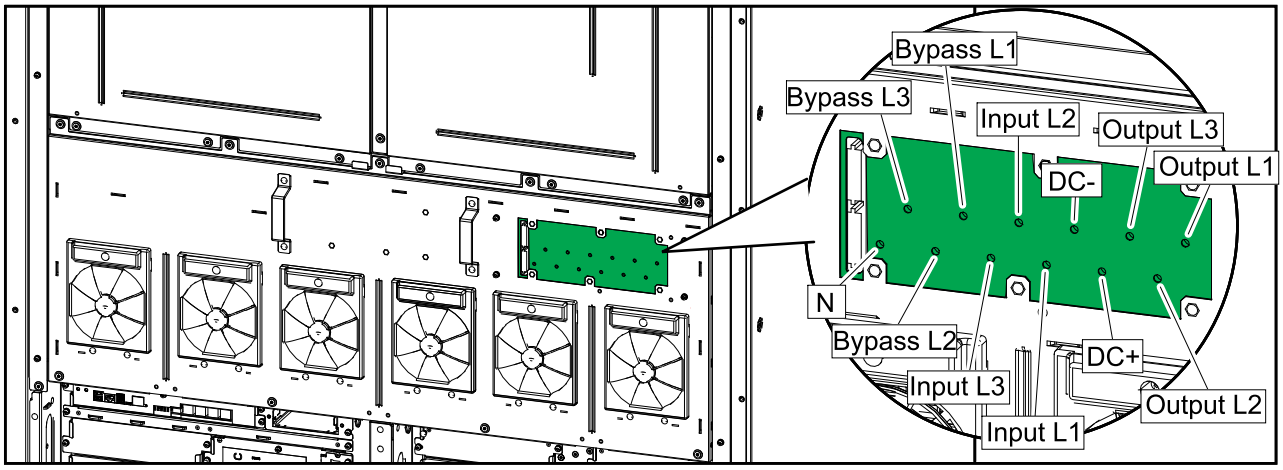

7. Reinstall the plate over the measurement points.
8. Remove all the power modules from the UPS.

⚠WARNING

HEAVY LOAD

Power modules are heavy (54 kg). Use appropriate lifting equipment and trained personnel to lift and handle the power module. It is recommended to use a scissor lifting cart or similar appropriate lifting equipment as shown in this procedure. See the specifications for the recommended scissor lifting cart below. If no lifting equipment is available, three persons are required to lift and handle the power module.

Failure to follow these instructions can result in death, serious injury, or equipment damage.

⚠WARNING

HAZARD OF INJURY

Never stack the power modules on top of each other.

Failure to follow these instructions can result in death, serious injury, or equipment damage.

⚠CAUTION

HEAVY LOAD AND POTENTIALLY HOT SURFACE

Use protective gloves and safety shoes when handling the power modules.

Failure to follow these instructions can result in injury or equipment damage.

Specifications for Recommended Scissor Lifting Cart

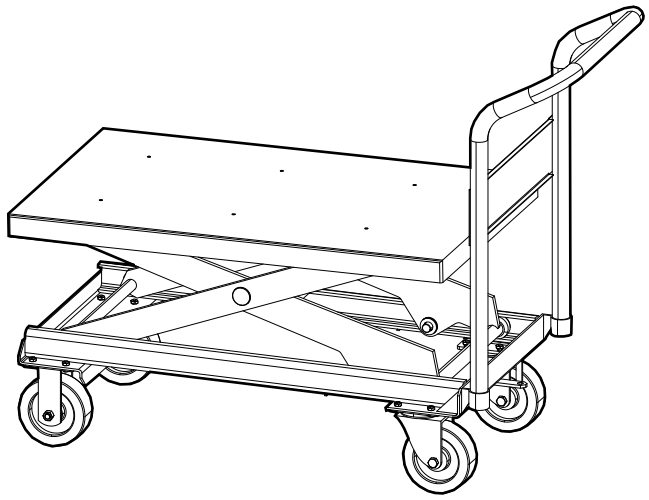

Lifting weight capacity: Minimum 80 kg
Lifting height range (lowest power module position to highest power module position): 100 mm to 650 mm
Table size: Minimum 700 mm x 450 mm
Material: Steel frame with solid wheels with brakes
CE/GS approved

a. Set the enable switch to the OFF (unlocked) position. Remove the four screws from the power module and save the screws.

Front View

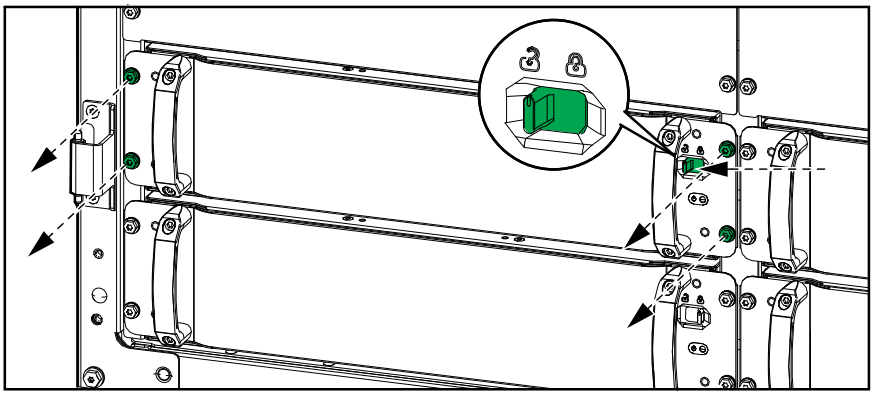

b. Use the provided power module tool(50) to pull the power module out from the power module slot. Place the power module tool as shown.

Front View of Using the Power Module Tool When the Power Module is Next to a Filler Plate

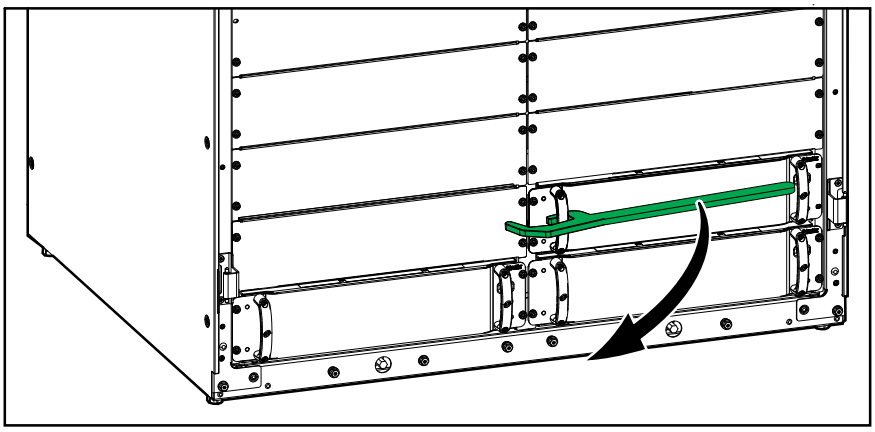

Front View of Using the Power Module Tool When the Power Module is Next to an Empty Slot

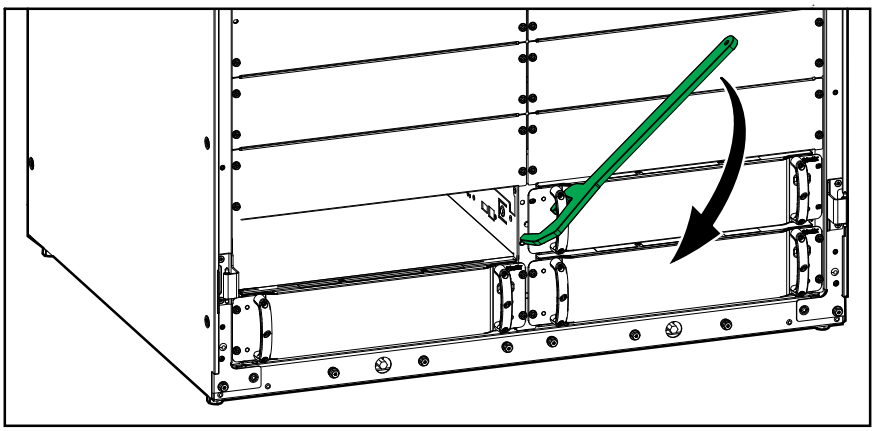

(50) The power module tool is stored in the document compartment in the UPS front door.

Front View of Using the Power Module Tool When the Power Module is Next to a Power Module

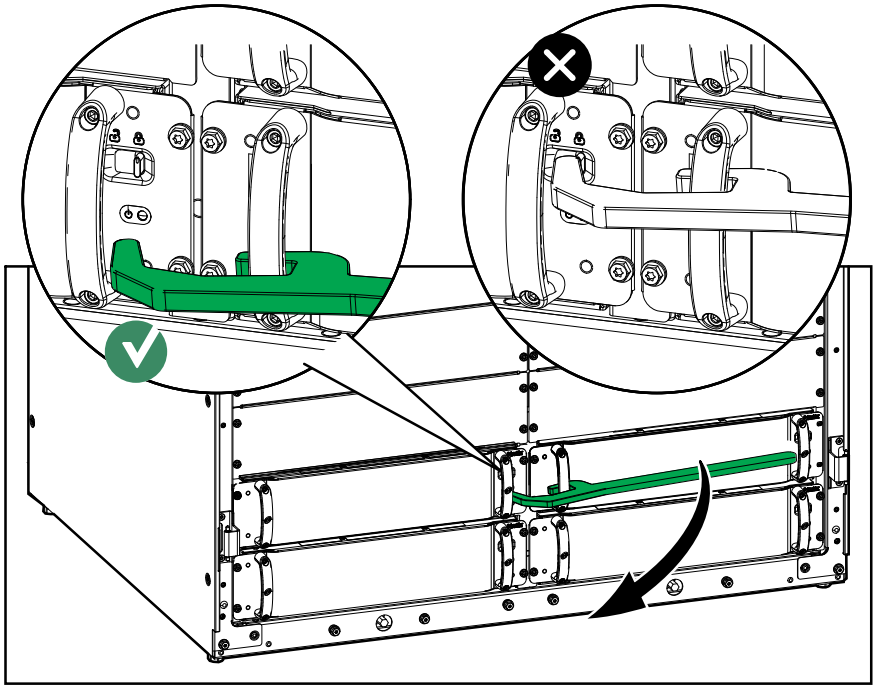

c. Pull the power module halfway out. A locking mechanism prevents the power module from being pulled all the way out.

d. Release the lock by pressing the release button in the right side of the power module and pull the power module out onto an appropriate scissor lifting cart.

Front View

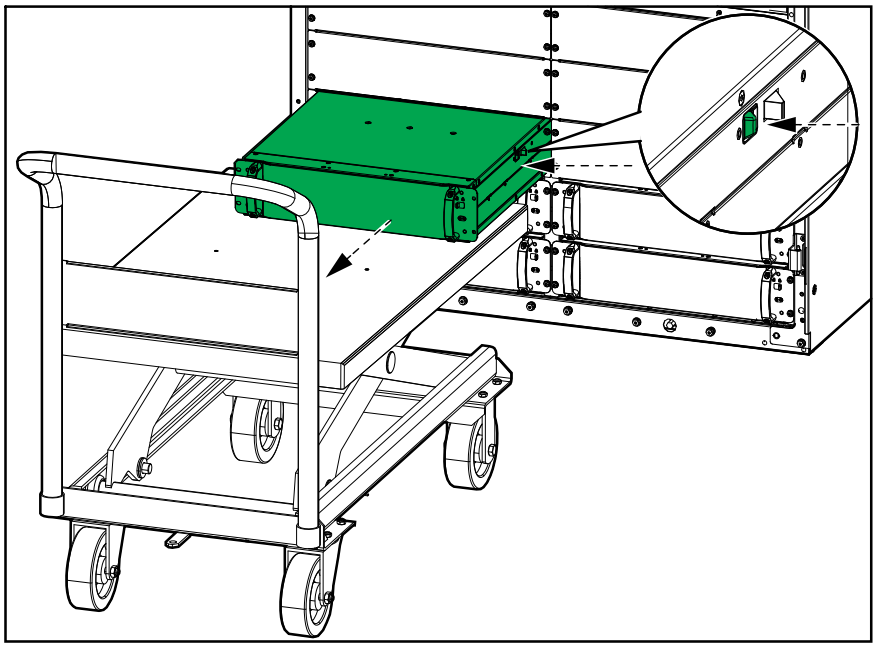

e. Install a filler plate in front of the empty power module slot, if available.

Front View

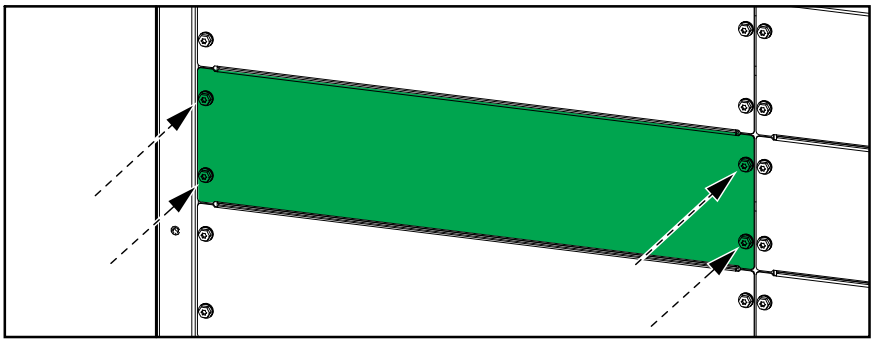

⚠WARNING

RISK OF EQUIPMENT DAMAGE

- Store the power modules at an ambient temperature of -25 to 55 °C, 0-95% non-condensing humidity.
- Store the power modules in their original protective packaging.

Failure to follow these instructions can result in death, serious injury, or equipment damage.

9. Remove the two inner doors. Save all parts for reinstallation:
   a. Remove the two screws and the two L-shaped parts. Remove the 13 screws.

Front View

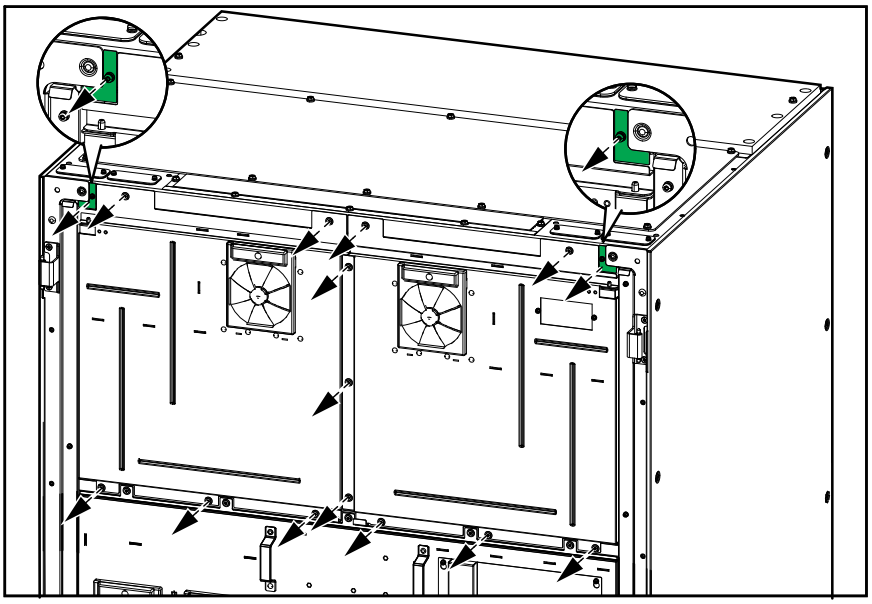

   b. Open the two inner doors.
   c. Unplug the signal cable connectors.
   d. Remove the nut and brackets in both sides.

Front View

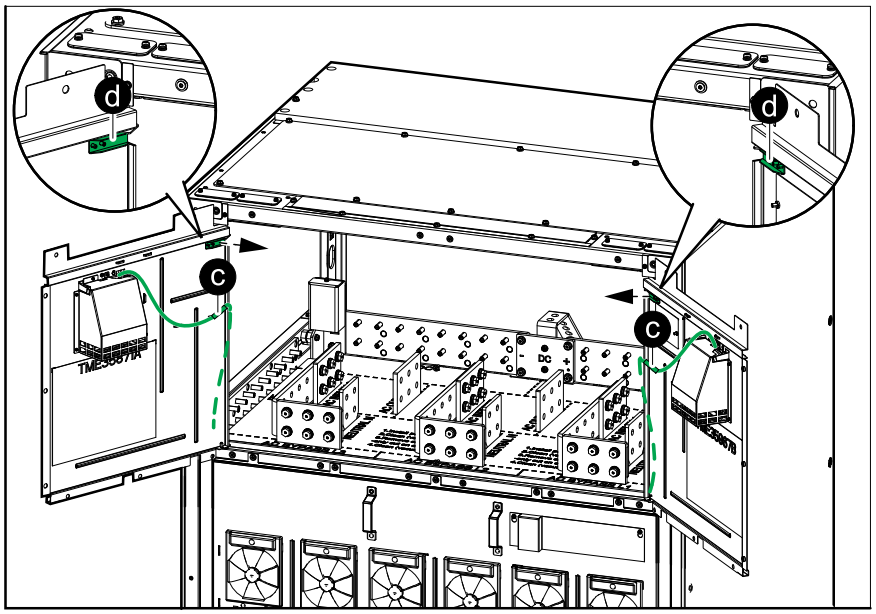

e. Lift the inner doors upwards to remove them.

Front View

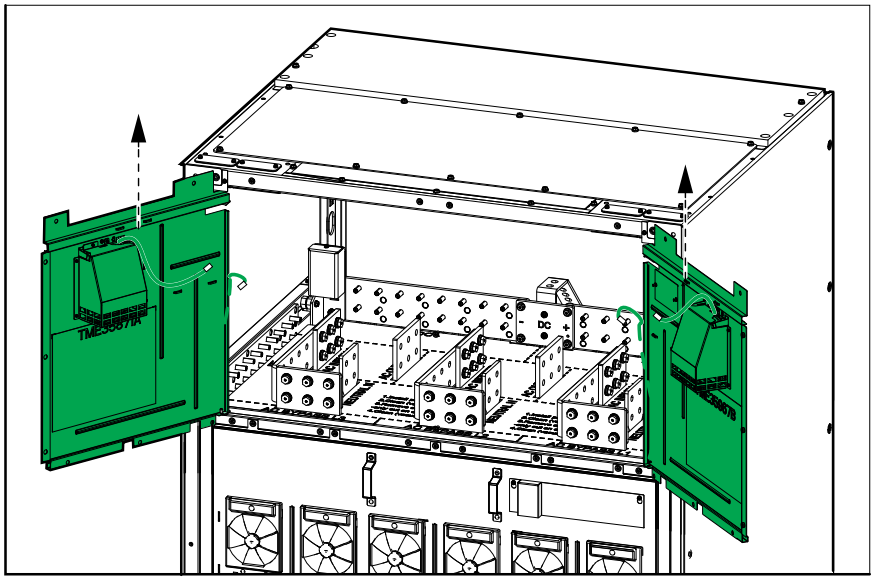

10. Measure for and verify ABSENCE of voltage on each input/bypass/output/ neutral/DC busbar before continuing.

⚠⚠DANGER

HAZARD OF ELECTRIC SHOCK, EXPLOSION, OR ARC FLASH

Measure for and verify ABSENCE of voltage on each input/bypass/output/ neutral/DC busbar before continuing.

Failure to follow these instructions will result in death or serious injury.

Front View

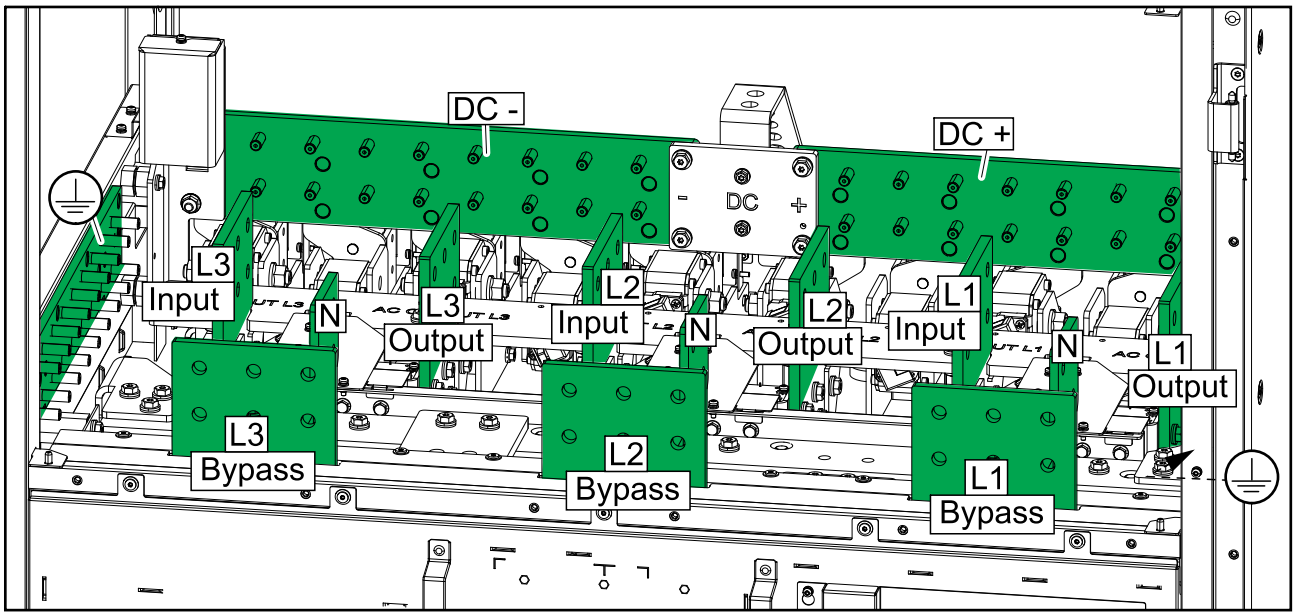

11. Disconnect all power cables from the UPS. See Connect the Power Cables in the UPS, page 73 for details.

12. **If external sync is present**: Remove the transparent protection cover from the external synchronization board 0P4809. Disconnect the signal cables from the external synchronization board 0P4809. See Connect the Signal Cables for External Synchronization, page 79 for details.

⚠DANGER

HAZARD OF ELECTRIC SHOCK, EXPLOSION, OR ARC FLASH

Check for absence of voltage for all three signal terminals on the external synchronization board 0P4809. When the external synchronization cables are installed, the terminals on the external synchronization board 0P4809 may be energized. Disconnect the fuse disconnector device at the source before removing the transparent protection cover.

Failure to follow these instructions will result in death or serious injury.

Front View

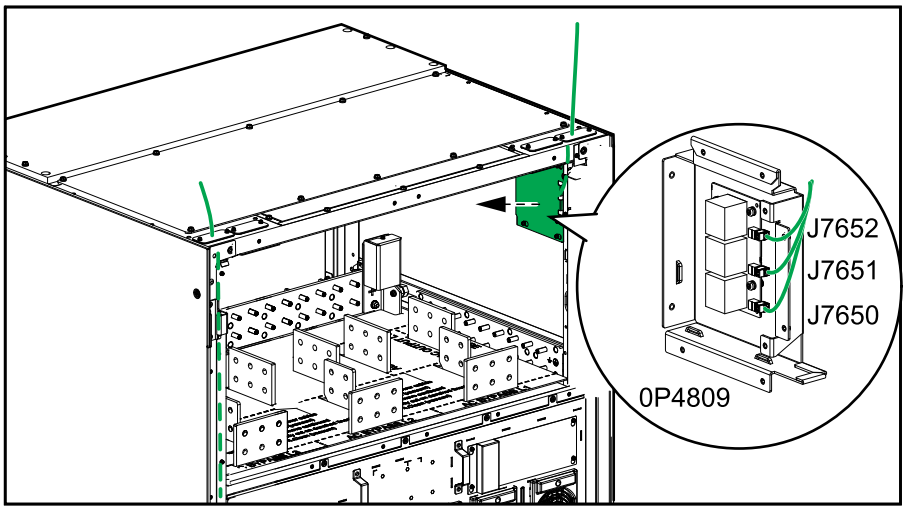

13. Reinstall the two inner doors:
    a. Lift the inner doors onto the hinges.
    b. Reinstall the nut and brackets in both sides.
    c. Reconnect the signal cable connectors.
    d. Close the inner doors and reinstall the 13 screws.
    e. Reinstall the L-shaped part in both sides with the two screws.

Front View

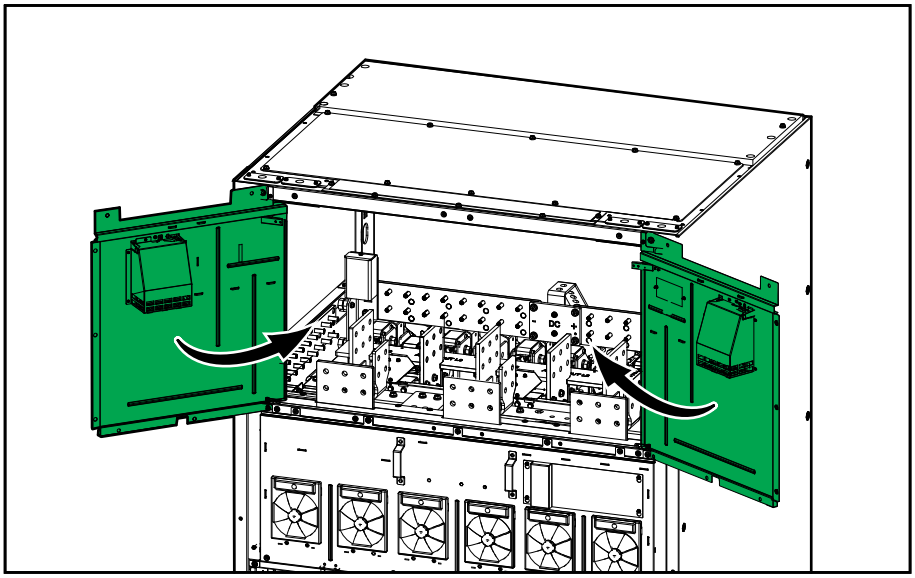

14. Disconnect and remove all signal cables from the UPS. See Connect the Signal Cables, page 88, Connect the Signal Cables from Switchgear and Third-Party Auxiliary Products, page 92, Connect the Modbus Cables, page 99, and Connect the PBUS Cables, page 101 for details.
15. **Only for UPS with seismic anchoring**: Remove the front seismic anchoring bracket. Save for reinstallation.

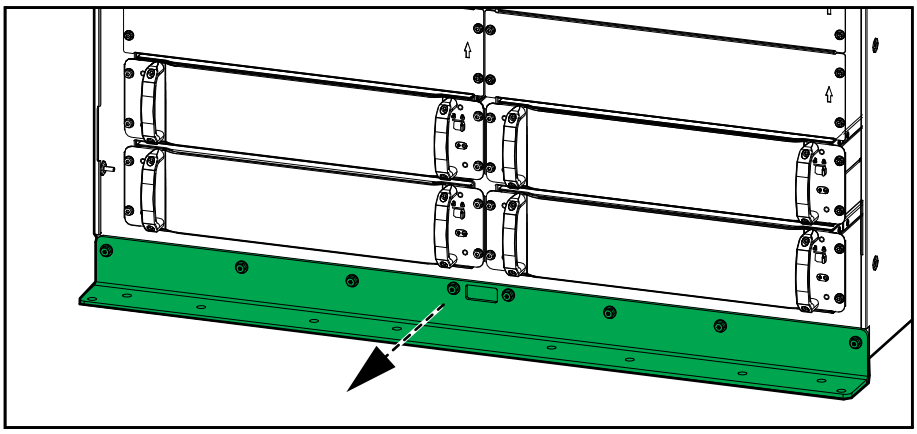

16. **Only for UPS with seismic anchoring**: Disconnect the UPS from the rear seismic anchoring bracket by loosening the bolts.

Front View

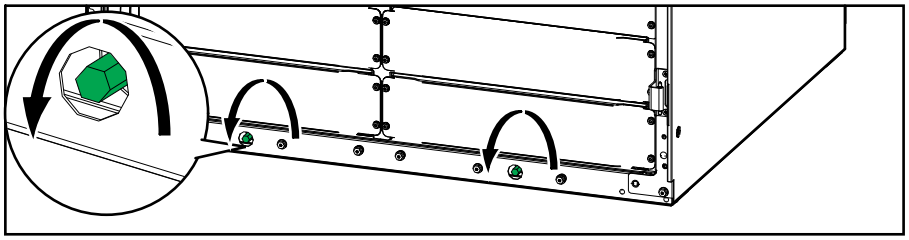

17. Close and lock the front doors.
18. Raise the feet of the UPS until the casters have full contact with the floor.
19. You can now move the UPS by rolling it over the floor on the casters.

> **⚠WARNING**
>
> **TIPPING HAZARD**
>
> - The casters of the UPS are exclusively for transport on flat, even, hard, and horizontal surfaces.
> - The casters of the UPS are intended for transport over short distances (i.e. inside the same building).
> - Move at a slow pace and pay close attention to the floor conditions and the balance of the UPS.
>
> **Failure to follow these instructions can result in death, serious injury, or equipment damage.**

20. **Only for UPS with seismic anchoring**: Remove the rear seismic anchoring bracket from the floor. Save for reinstallation. See Mount the Seismic Anchoring and Position the UPS, page 64 for details.
21. **For transport over longer distances or in conditions that are not suitable for the casters of the UPS**:

> **⚠WARNING**
>
> **TOP-HEAVY CABINET**
>
> The UPS can be top-heavy with no power modules installed. Take appropriate precautions during handling and preparation for transport/ shipment.
>
> **Failure to follow these instructions can result in death, serious injury, or equipment damage.**

> **⚠WARNING**
>
> **TIPPING HAZARD**
>
> For transport over longer distances or in conditions that are not suitable for the casters of the UPS, ensure:
>
> - that personnel performing the transport have necessary skill and have received adequate training;
> - to use appropriate tools to safely lift and transport the UPS;
> - to protect the product against damage by using appropriate protection (like wrapping or packaging).
>
> **Failure to follow these instructions can result in death, serious injury, or equipment damage.**

Transportation requirements:

- Mount the UPS in a vertical position in the center of a suitable pallet that can support the weight of the UPS (639 kg with no power modules installed).
- Use appropriate means of fixation to mount the UPS to the pallet.
- The original shipping pallet in combination with the original transportation brackets can be reused, if in undamaged condition.

⚠ DANGER

TIPPING HAZARD

- The UPS must be appropriately fixed to the pallet immediately after being placed on the pallet.
- The fixation hardware must be strong enough to withstand vibrations and shocks during loading, transport, and unloading.

Failure to follow these instructions will result in death or serious injury.

⚠ WARNING

UNEXPECTED EQUIPMENT BEHAVIOR

Do not lift the UPS with a forklift/pallet truck directly on the frame as it may bend or damage the frame.

Failure to follow these instructions can result in death, serious injury, or equipment damage.

22. Perform one of the following:
    – Decommission the UPS, OR
    – Move the UPS to a new location to install it.
23. **Only for installing the UPS in a new location**: Follow the installation manual to install the UPS in the new location. See Installation Procedure for the UPS, page 59 for installation overview. Start-up must only be performed by Schneider Electric.

⚠⚠ DANGER

HAZARD OF ELECTRIC SHOCK, EXPLOSION, OR ARC FLASH

Start-up must only be performed by Schneider Electric.

Failure to follow these instructions will result in death or serious injury.

Schneider Electric
1884 Boulevard de la Défense
92000 Nanterre
France

www.se.com

© 2023 – 2026 Schneider Electric. All rights reserved.

990-55111F-001