Galaxy VXL

500-1250 kW UPS 380/400/415 V (IEC)

Operation

Latest updates are available on the Schneider Electric website

8/2026



www.se.com

Legal Information

The information provided in this document contains general descriptions, technical characteristics and/or recommendations related to products/solutions.

This document is not intended as a substitute for a detailed study or operational and site-specific development or schematic plan. It is not to be used for determining suitability or reliability of the products/solutions for specific user applications. It is the duty of any such user to perform or have any professional expert of its choice (integrator, specifier or the like) perform the appropriate and comprehensive risk analysis, evaluation and testing of the products/solutions with respect to the relevant specific application or use thereof.

The Schneider Electric brand and any trademarks of Schneider Electric and its subsidiaries referred to in this document are the property of Schneider Electric or its subsidiaries. All other brands may be trademarks of their respective owner.

This document and its content are protected under applicable copyright laws and provided for informative use only. No part of this document may be reproduced or transmitted in any form or by any means (electronic, mechanical, photocopying, recording, or otherwise), for any purpose, without the prior written permission of Schneider Electric.

Schneider Electric does not grant any right or license for commercial use of the document or its content, except for a non-exclusive and personal license to consult it on an "as is" basis.

Electrical equipment should be installed, operated, serviced, and maintained only by qualified personnel. No responsibility is assumed by Schneider Electric for any consequences arising out of the use of this material.

Schneider Electric reserves the right to make changes or updates with respect to or in the content of this document or the format thereof, at any time without notice.

To the extent permitted by applicable law, no responsibility or liability is assumed by Schneider Electric and its subsidiaries for any errors or omissions in the informational content of this document, as well as any non-intended use or misuse of the content thereof.

Access to Your Product Manuals Online

Find the UPS Manuals, Submittal Drawings, and Other Documentation for Your Specific UPS Here:

In your web browser, type in https://www.go2se.com/ref= and the commercial reference for your product.

Example: *https://www.go2se.com/ref=**GVXL0K1250HS***

Find the UPS Manuals, Relevant Auxiliary Product Manuals, and Option Manuals Here:

Scan the code to go to the Galaxy VXL online manual portal:

IEC (380/400/415 V)

https://productinfo.se.com/galaxyvxl_iec/

Here you can find your UPS installation manual, UPS operation manual, and UPS technical specifications, and you can also find installation manuals for your auxiliary products and options.

This online manual portal is available on all devices and offers digital pages, search functionality across the different documents in the portal, and PDF download for offline use.

Learn More About the Galaxy VXL Here:

Go to *https://www.se.com/ww/en/product-range/209756733* to learn more about this product.

Table of Contents

Table of Contents 5
Important Safety Instructions — SAVE THESE INSTRUCTIONS 7
- Electromagnetic Compatibility 8
- Safety Precautions 8
- Cybersecurity and Physical Security Recommendations 9
  - Cybersecurity and Network Management Cards 10

Single System Overview 11
Parallel System Overview 12
Overview of User Interface 13
- Display 13
  - Menu Tree 16
- System Level Controller (SLC) and Unit Controller (UC) Overview 20

Operation Modes 21
- UPS Modes 21
- System Modes 24

Frequency Converter Mode 26
Configuration 27
- Set the Display Language 27
- Change the Password 27
- Configure the UPS Input 28
- Configure the Output 30
  - Output Transformer Voltage Compensation 31
- Configure the Battery Solution 32
- Configure High Efficiency Mode 35
- View Configuration for Prioritizing Battery Operation When Input Contact is Activated 36
- Enable Peak Shaving Mode 37
- View Status for UPS Participation as Distributed Energy Resource (DER) 38
- Configure the Disconnect Devices 39
- Configure the Input Contacts 40
- Configure the Output Relays 42
- Configure Power Smoothing for an AI Load 44
- Configure Settings for Fault Ride-Through (FRT) 46
- Configure the Network 48
- Configure the Modbus 50
- Set the UPS Name 52
- Set the Date and Time 52
- Configure the Display Preferences 52
- Configure the LED Strip on the Front Door 52
- Configure the Air Filter Reminder 53

Operation Procedures 54
- Transfer the UPS from Normal Operation to Static Bypass Operation 54

Transfer the UPS from Static Bypass Operation to Normal Operation....54
Turn the Inverter OFF....55
Turn the Inverter ON....55
Set the Charger Mode....56
Shut Down the UPS System into Maintenance Bypass Operation....57
Shut Down into Maintenance Bypass Operation for Single UPS System with Solenoid Key Release Unit (SKRU) Installed....58
Isolate a Single UPS in the Parallel System....59
Start Up the UPS System from Maintenance Bypass Operation....60
Start Up from Maintenance Bypass Operation for Single UPS System with Solenoid Key Release Unit (SKRU) Installed....61
Start Up and Add a UPS to a Running Parallel System....62
Access a Configured Network Management Interface....63
Enable HTTP/HTTPS Protocols....63
Enable SNMP Protocols....64
View the Logs....65
View the System Status Information....66
Tests....70
Start a Runtime Calibration Test....71
Stop a Runtime Calibration Test....71
Start a Battery Test....72
Stop a Battery Test....72
Perform a Battery SPoT Mode Test in a Single UPS System....73
Maintenance....75
Recommended Personal Protective Equipment (PPE)....75
Connect Temperature/Humidity Sensor (Option)....75
Replace the Air Filters (GVXLOPT007)....76
Live Swap: Add, Remove, or Replace a Power Module....77
Determine if you need a Replacement Part....84
Troubleshooting....85
LED Strip Lighting per UPS Operation Mode....85
Status LED Lighting per UPS Operation Mode....86
Status LED on the Power Module....87
Export UPS Report to a USB Device....88
Save the UPS Settings on a USB Device....89
Restore the UPS Settings from a USB Device....90
Shut Down the UPS System into Maintenance Bypass Operation with an Inoperable Display....91
Start Up the UPS System from Maintenance Bypass Operation with an Inoperable Display....92

Important Safety Instructions — SAVE THESE INSTRUCTIONS

Read these instructions carefully and look at the equipment to become familiar with it before trying to install, operate, service or maintain it. The following safety messages may appear throughout this manual or on the equipment to warn of potential hazards or to call attention to information that clarifies or simplifies a procedure.



The addition of this symbol to a “Danger” or “Warning” safety message indicates that an electrical hazard exists which will result in personal injury if the instructions are not followed.



This is the safety alert symbol. It is used to alert you to potential personal injury hazards. Obey all safety messages with this symbol to avoid possible injury or death.

⚠ DANGER

DANGER indicates a hazardous situation which, if not avoided, **will result in** death or serious injury.

Failure to follow these instructions will result in death or serious injury.

⚠ WARNING

WARNING indicates a hazardous situation which, if not avoided, **could result in** death or serious injury.

Failure to follow these instructions can result in death, serious injury, or equipment damage.

⚠ CAUTION

CAUTION indicates a hazardous situation which, if not avoided, **could result in** minor or moderate injury.

Failure to follow these instructions can result in injury or equipment damage.

NOTICE

NOTICE is used to address practices not related to physical injury. The safety alert symbol shall not be used with this type of safety message.

Failure to follow these instructions can result in equipment damage.

Please Note

Electrical equipment should only be installed, operated, serviced, and maintained by qualified personnel. No responsibility is assumed by Schneider Electric for any consequences arising out of the use of this material.

A qualified person is one who has skills and knowledge related to the construction, installation, and operation of electrical equipment and has received safety training to recognize and avoid the hazards involved.

Per IEC 62040-1: "Uninterruptible power systems (UPS) -- Part 1: Safety Requirements," this equipment, including battery access, must be inspected, installed and maintained by a skilled person.

The skilled person is a person with relevant education and experience to enable him or her to perceive risks and to avoid hazards which the equipment can create (reference IEC 62040-1, section 3.102).

Electromagnetic Compatibility

NOTICE

RISK OF ELECTROMAGNETIC DISTURBANCE

This is a product Category C3 according to IEC 62040-2. This is a product for commercial and industrial applications in the second environment - installation restrictions or additional measures may be needed to prevent disturbances. The second environment includes all commercial, light industry, and industrial locations other than residential, commercial, and light industrial premises directly connected without intermediate transformer to a public low-voltage mains supply. The installation and cabling must follow the electromagnetic compatibility rules, e.g.:

- the segregation of cables,
- the use of shielded or special cables when relevant,
- the use of grounded metallic cable tray and supports.

Failure to follow these instructions can result in equipment damage.

Safety Precautions

⚠⚠DANGER

HAZARD OF ELECTRICAL SHOCK, EXPLOSION OR ARC FLASH

All safety instructions in this document must be read, understood and followed.

Failure to follow these instructions will result in death or serious injury.

⚠⚠DANGER

HAZARD OF ELECTRICAL SHOCK, EXPLOSION OR ARC FLASH

After the UPS system has been electrically wired, do not start up the system. Start-up must only be performed by Schneider Electric.

Failure to follow these instructions will result in death or serious injury.

Cybersecurity and Physical Security Recommendations

Install the Product in a Secure Location

Custodians should secure products from unauthorized physical access.

- Access should be restricted to those who require access to maintain the product.
- Restricted areas should be clearly marked for authorized personnel only.
- Restricted areas should be secured by locked doors.
- Access to the restricted areas should produce a physical or electronic audit trail.

Secure Access to the User Interface and Communication Ports of the Product

Install the product in a rack or cage that can be locked with a suitable key, or other physical methods. This will prevent access to the user interface and the physical communication ports of the product.

Description of Risk

Attackers with physical access to the product can access the equipment without authorization.

Recommendations

Physical security must be in place to control physical access to restricted areas and facilities containing the product. The product should be located under lock and key or protected by physical restraints that prevent unauthorized access or removal from restricted areas. Access to areas containing the product should only be granted to personnel who require access based on their job function.

Restricted areas should display signs that clearly indicate access is for authorized personnel only. Facilities containing the product should give minimum indication of their purpose, with no obvious signs identifying the presence of related functions.

Physical access control devices, such as key card readers, doors and cabinet locks, should be tested prior to use and on a periodic basis (e.g. annually). Resource custodians should produce physical or electronic audit trails to record all personnel's physical access to restricted areas for security incident investigation. Inventory of who has physical access to control devices should be regularly reviewed, and any inappropriate access identified during the review should be promptly removed.

Firmware Updates

Schneider Electric strongly recommends that you review the security bulletins that relate to your Schneider Electric product.

For information on new and updated security bulletins, visit the **Schneider Electric Security Bulletins web page**.

Cybersecurity and Network Management Cards

NOTE: Schneider Electric adheres to industry best practices in the development and implementation of embedded components of Schneider Electric Network Management Cards, which enable the devices to function remotely over the network. This includes a "Defense-in-Depth" approach to secure the connected products. You can find the Security Handbook for the different network management cards on the Schneider Electric website. The Security Handbook describes security features and options for the appliance.

Single System Overview

UIB	Unit input disconnect device
SSIB	Static switch input disconnect device
UOB	Unit output disconnect device
BB	Battery disconnect device
MBB	Maintenance bypass disconnect device

NOTE: In Schneider Electric literature, 'disconnect device' is used as a generic term covering circuit breakers or switches as their position may vary depending on configuration. Details about the individual configuration are found in the electrical diagram and/or by reading the symbol on the front of each disconnect device.

Single System – Single Mains

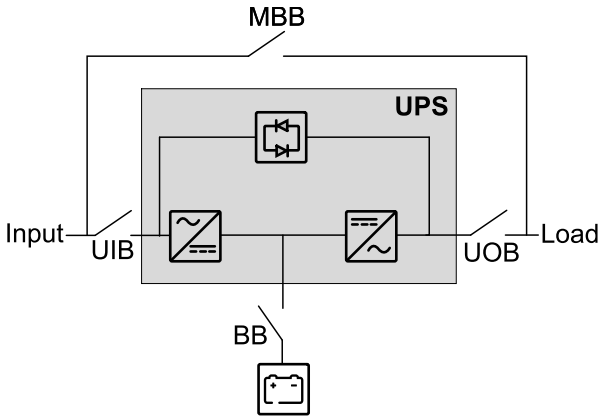

Single System – Dual Mains

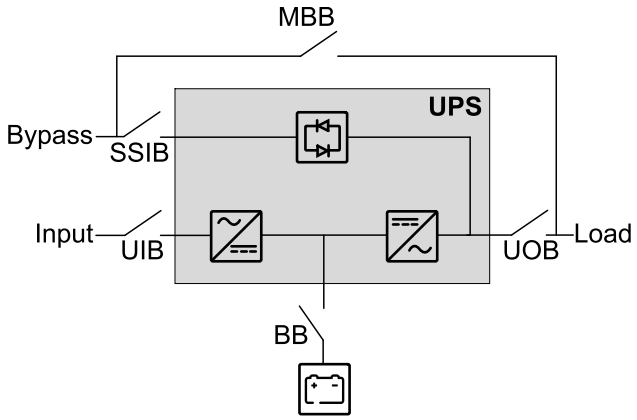

Parallel System Overview

UIB	Unit input disconnect device
SSIB	Static switch input disconnect device
UOB	Unit output disconnect device
SIB	System isolation disconnect device
BB	Battery disconnect device
MBB	Maintenance bypass disconnect device

NOTE: In Schneider Electric literature, 'disconnect device' is used as a generic term covering circuit breakers or switches as their position may vary depending on configuration. Details about the individual configuration are found in the electrical diagram and/or by reading the symbol on the front of each disconnect device.

Galaxy VXL can support up to 4 UPSs in parallel for capacity and up to 4+1 UPSs in parallel for redundancy with individual UIB and SSIB.

Parallel System – Single Mains

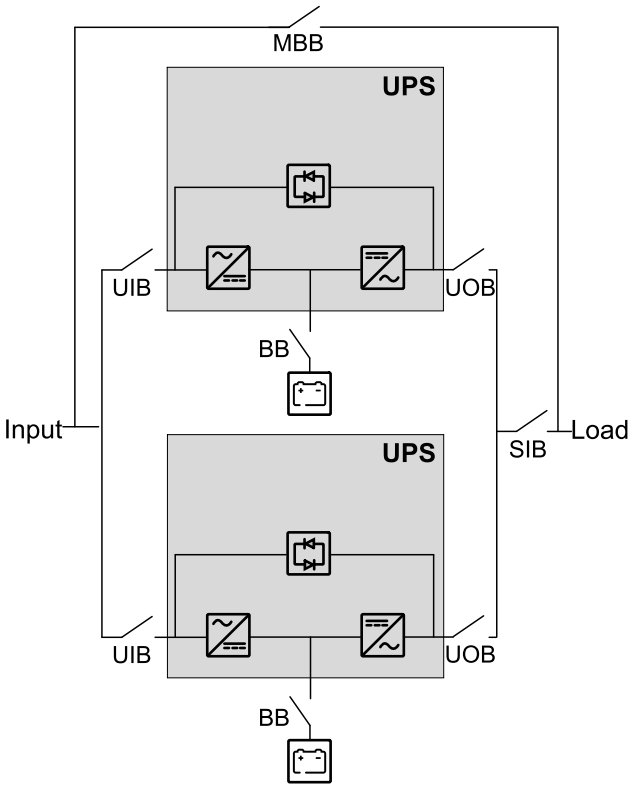

Parallel System – Dual Mains

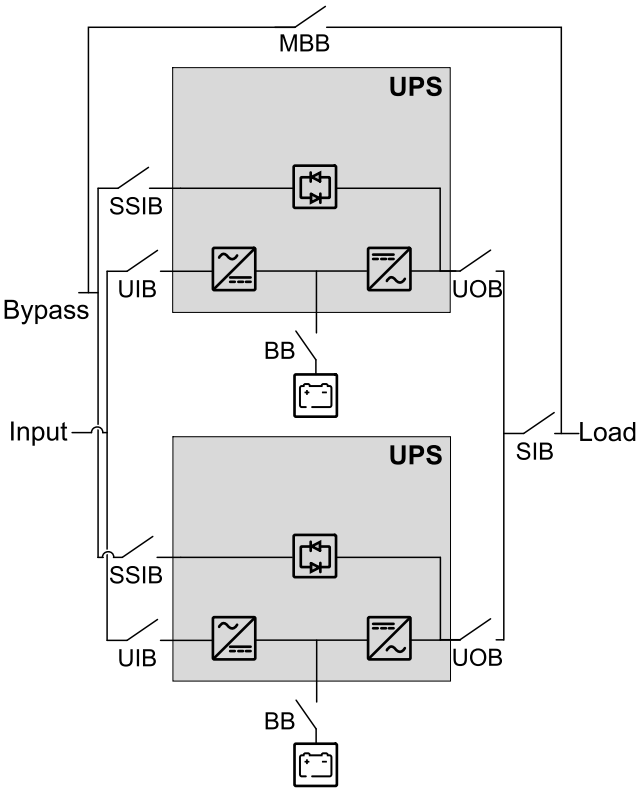

Overview of User Interface

Display

Overview of the Home Screen

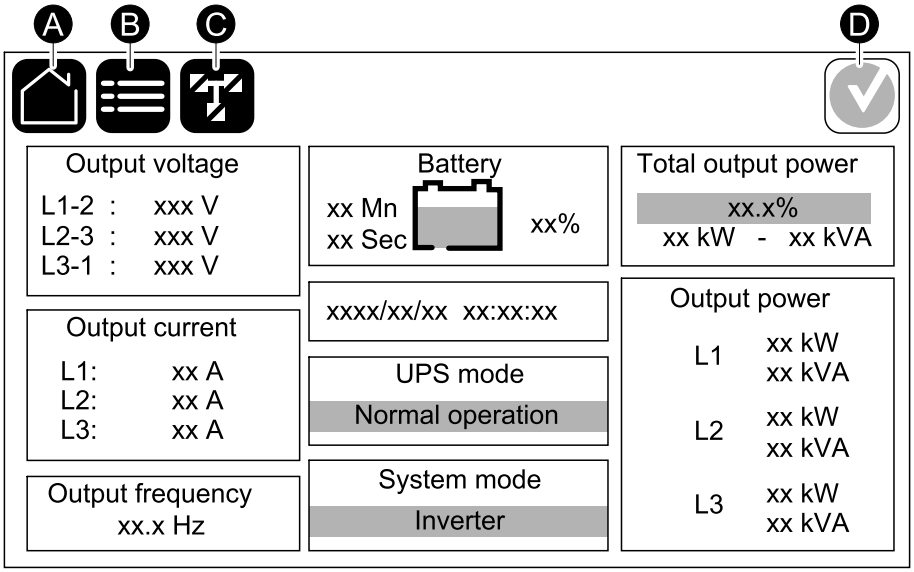

A. Home button - tap this button on any screen to return to the home screen.

B. Main menu button - tap this button on any screen to access the menus.

C. Mimic diagram button - tap this button on any screen to access the mimic diagram.

D. Alarm status symbol - tap this button on any screen to access the active alarms log.

You can tap on the output or battery fields on the home screen to go directly to the detailed measurement pages.

Mimic Diagram

The green power line (gray in illustration) in the mimic diagram shows the power flow through the UPS system. Active modules (inverter, rectifier, battery, static bypass switch, etc.) are framed in green and inactive modules are framed in black. Modules framed in red are inoperable or in an alarm condition.

> **NOTE:** The mimic diagram only shows one battery disconnect device BB even if more battery disconnect devices have been connected and configured for monitoring. If one or more of the monitored battery disconnect devices are in the closed position, the BB on the mimic diagram will show as closed. If all of the monitored battery disconnect devices are in the open position, the BB on the mimic diagram will show as open.

The mimic diagram will adapt to your system configuration – the mimic diagrams shown here are just examples.

Example of a Single UPS System – Dual Mains

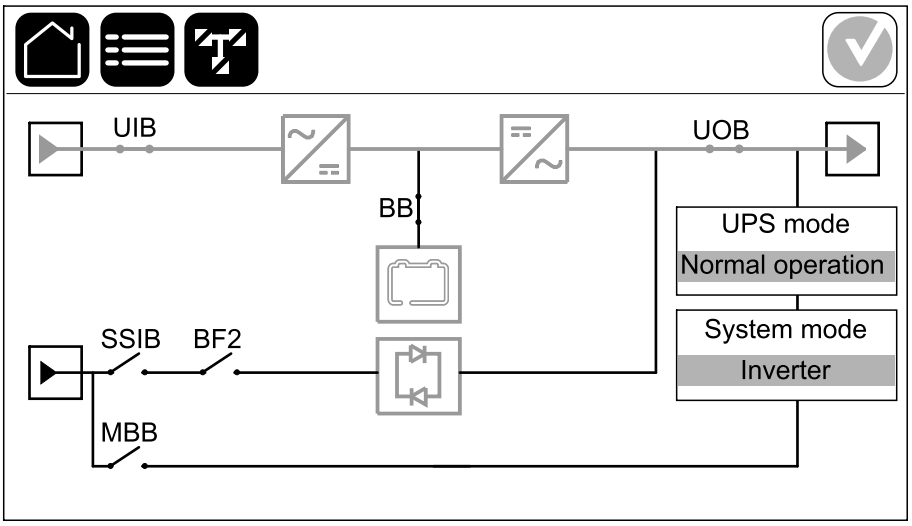

NOTE: When the UPS system is configured for frequency converter mode, bypass is not available and is not shown in the mimic diagram.

Example of a Single UPS System – Frequency Converter Mode with Battery

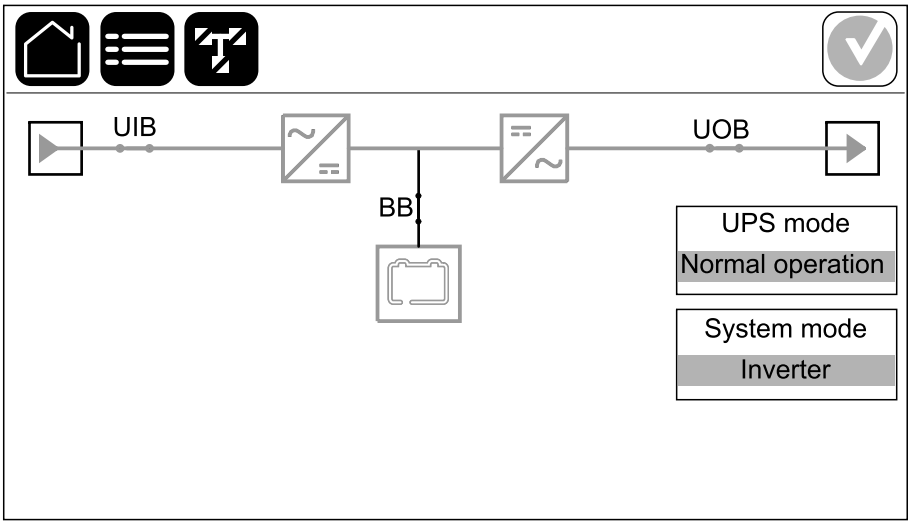

Example of a Single UPS System – Frequency Converter Mode without Battery

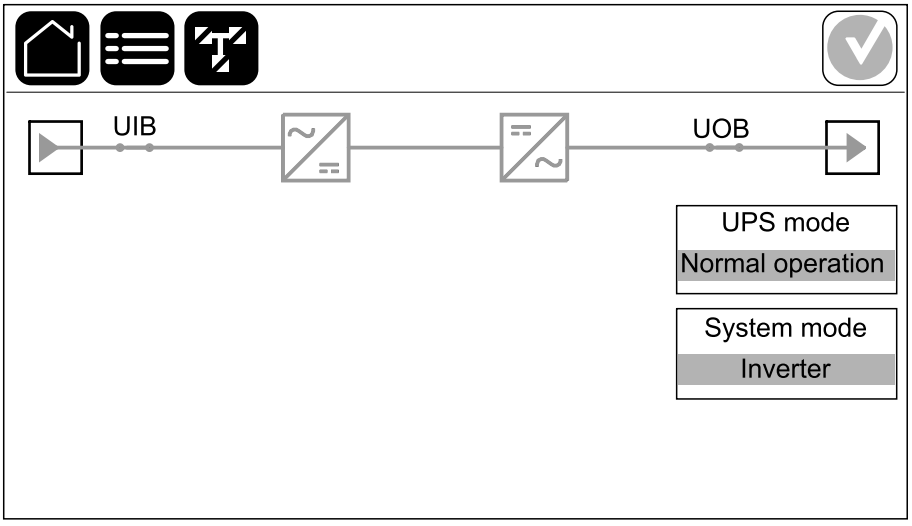

In mimic diagrams for parallel UPS systems, tap on the gray UPS to see the mimic diagram on UPS level.

Example of a Parallel UPS System – Dual Mains with Individual UIB and SSIB

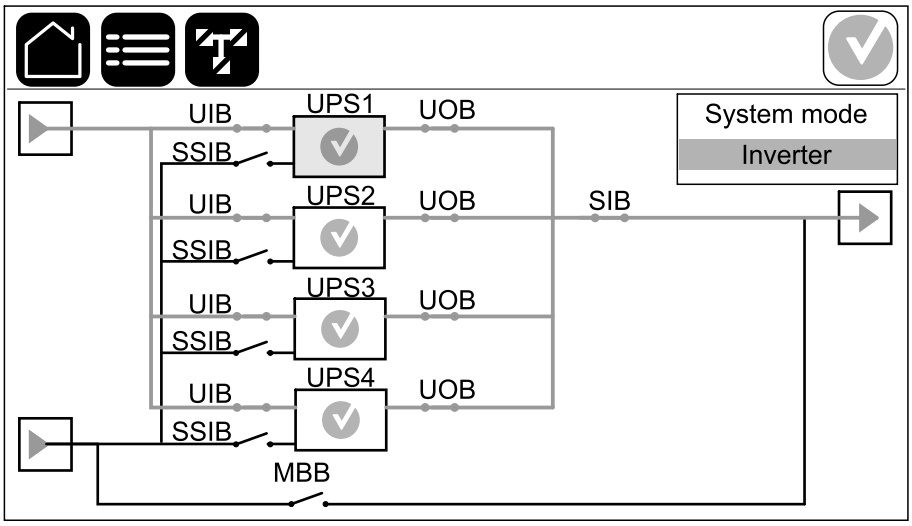

Alarm Status Symbol

The alarm status symbol (gray in illustration) in the top right corner of the display changes depending on the alarm status of the UPS system.

	Green: No alarms present in the UPS system.
	Blue: Informational alarm(s) present in the UPS system. Tap the alarm status symbol to open the active alarms log.
	Yellow: Warning alarm(s) present in the UPS system. Tap the alarm status symbol to open the active alarms log.
	Red: Critical alarm(s) present in the UPS system. Tap the alarm status symbol to open the active alarms log.

Menu Tree

Main Menu

- **Status** – see Submenus for **Status**, page 16.
- **Logs** – see View the Logs, page 65.
- **Control** – see Submenus for **Control**, page 17.
- **Configuration** – see Submenus for **Configuration**, page 18.
- **Maintenance** – see Submenus for **Maintenance**, page 19.
- **Statistics** – see Submenus for **Statistics**, page 19.
- **About** – see Submenus for **About**, page 19.
- **Logout** – see Change the Password, page 27.
- Flag button – tap this button to set the display language, see Set the Display Language, page 27.

Some menus contain more submenus than described in this manual. These submenus are grayed out and are only for use by Schneider Electric to avoid unwanted load impacts. Other menu items can also be grayed out/not shown on the display if they are not relevant or not released yet for this particular UPS system.

Submenus for Status

- **Status** – see View the System Status Information, page 66.
  - **Input**
  - **Output**
  - **Bypass**
  - **Battery**
  - **Temperature**
  - **Power modules**
  - **Peak shaving**
  - **Parallel**(1)

(1) This menu is only available in a parallel system.

Submenus for Control

- **Control**[2]
  - **Operation mode**
    - **Transfer to bypass operation** – see Transfer the UPS from Normal Operation to Static Bypass Operation, page 54.
    - **Transfer to normal operation** – see Transfer the UPS from Static Bypass Operation to Normal Operation, page 54.
  - **Inverter**
    - **Inverter on** – see Turn the Inverter ON, page 55.
    - **Inverter off** – see Turn the Inverter OFF, page 55.
  - **Charger** – see Set the Charger Mode, page 56.
    - **Float**
    - **Boost**
    - **Equalization**
  - **Guided sequences**
    - **Start up UPS system** – see Start Up the UPS System from Maintenance Bypass Operation, page 60.
    - **Start up a UPS in a parallel system**[3] – see Start Up the UPS System from Maintenance Bypass Operation, page 60.
    - **Shut down UPS system** – see Shut Down the UPS System into Maintenance Bypass Operation, page 57.
    - **Shut down a UPS in a parallel system**[3] – see Shut Down the UPS System into Maintenance Bypass Operation, page 57.

(2) This menu requires administrator login to access.
(3) This menu is only available in a parallel system.

Submenus for Configuration

- **Configuration**[4]
  - **UPS** – see Configure the UPS Input, page 28.
  - **Output** – see Configure the Output, page 30.
  - **Battery** – see Configure the Battery Solution, page 32.
    - **Standard**
      - ◊ **General settings**
    - **Custom**
      - ◊ **General settings**
      - ◊ **Specific settings**
  - **High efficiency** – see Configure High Efficiency Mode, page 35.
  - **Grid interactive UPS** – see View Configuration for Prioritizing Battery Operation When Input Contact is Activated, page 36 and Enable Peak Shaving Mode, page 37.
    - **Protected Modbus**
      - ◊ **Generate new keys**
  - **Breakers** – see Configure the Disconnect Devices, page 39.
  - **Contacts and relays**
    - **Input contact** – see Configure the Input Contacts, page 40.
    - **Output relay** – see Configure the Output Relays, page 42.
  - **AI load** – see Configure Power Smoothing for an AI Load, page 44.
  - **FRT** (Fault Ride-Through) – see Configure Settings for Fault Ride-Through (FRT), page 46.
  - **Network** – see Configure the Network, page 48.
    - **Integrated NMC**
      - ◊ **IPV4**
      - ◊ **IPV6**
    - **Optional NMC** (if present)
      - ◊ **IPV4**
      - ◊ **IPV6**
  - **Modbus** – see Configure the Modbus, page 50.
    - **Integrated NMC**
      - ◊ **IPV4**
      - ◊ **IPV6**
    - **Optional NMC** (if present)
      - ◊ **IPV4**
      - ◊ **IPV6**
  - **General**
    - **UPS name** – see Set the UPS Name, page 52.
    - **Date and time** – see Set the Date and Time, page 52.
    - **Display** – see Configure the Display Preferences, page 52.
    - **LED strip** – see Configure the LED Strip on the Front Door, page 52.
    - **System**
    - **Reboot display**
  - **Reminder** – see Configure the Air Filter Reminder, page 53.

(4) This menu requires administrator login to access.

- **Save/restore**– see Save the UPS Settings on a USB Device, page 89 and Restore the UPS Settings from a USB Device, page 90.
- **Update status**

Submenus for Maintenance

- **Maintenance**
  - **Buzzer** – see Tests, page 70.
  - **Status LEDs** – see Tests, page 70 and Status LED Lighting per UPS Operation Mode, page 86.
  - **Breaker lamp** – see Tests, page 70.
  - **LED strip** – see Tests, page 70.
  - **Battery**(5) – see Start a Battery Test, page 72 and Stop a Battery Test, page 72.
  - **Runtime calibration**(5) – see Start a Runtime Calibration Test, page 71 and Stop a Runtime Calibration Test, page 71.
  - **Battery replacement**(5)
  - **Battery SPoT mode**(5) – see Perform a Battery SPoT Mode Test in a Single UPS System, page 73.
  - **UPS report**(5)– see Export UPS Report to a USB Device, page 88.

Submenus for Statistics

- **Statistics**
  - **Electricity savings**
    - **Settings**
    - **Simulation**

Submenus for About

- **About**
  - **UPS**
  - **Display**
  - **Integrated network management card (NMC)**
  - **Optional network management card (NMC)** (if present)

(5) This menu requires administrator login to access.

System Level Controller (SLC) and Unit Controller (UC) Overview

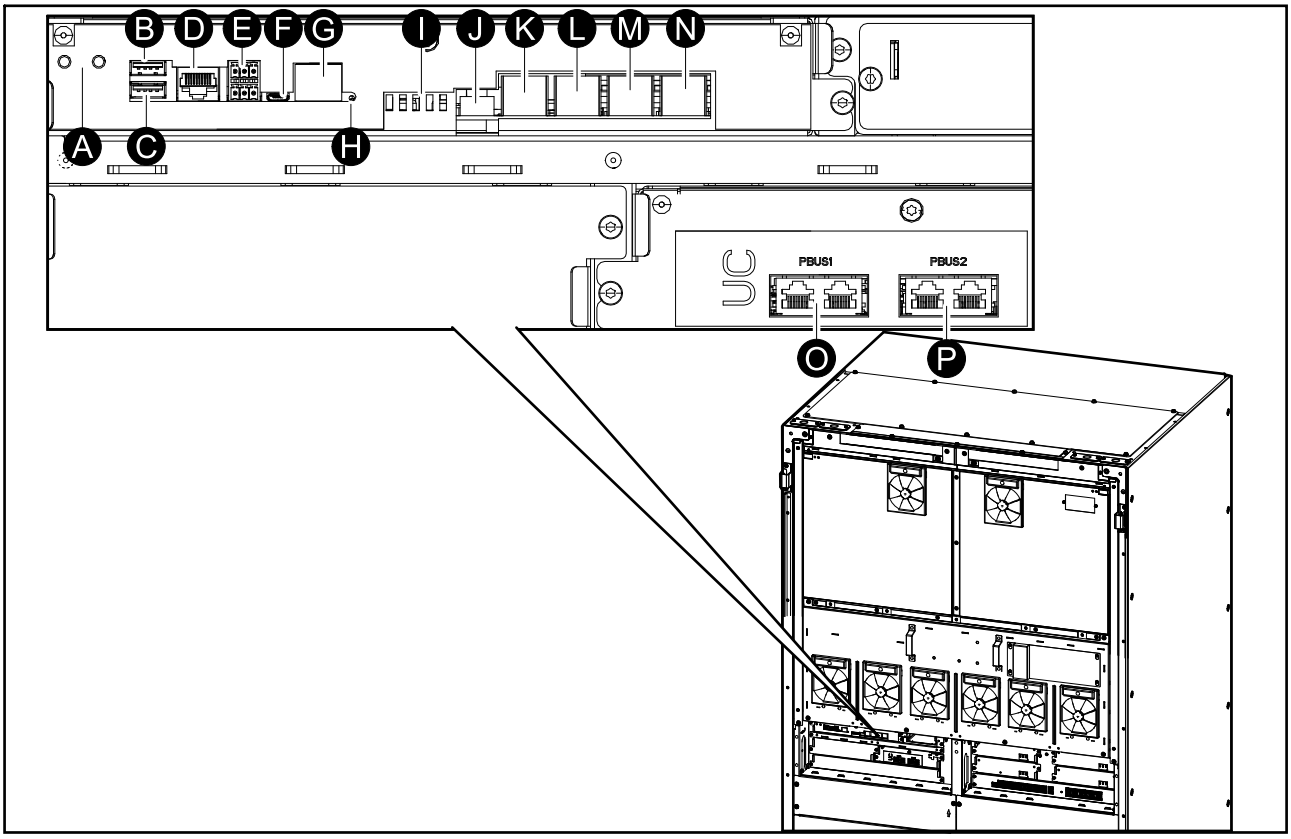

A. Inverter ON/OFF buttons
B. USB port 1(6)
C. USB port 2(6)
D. Universal I/O(6)
E. Modbus port(6)
F. USB Micro-B port(6)
G. Network port(6)
H. Reset button(6)
I. Status LEDs(7)
J. Display power supply
K. Display port
L. Service port(8)
M. EXT1(9)
N. For future use
O. PBUS 1(10)
P. PBUS 2(10)

(6) Built-in network management card.
(7) See Status LED Lighting per UPS Operation Mode, page 86.
(8) The service port can only be used by a Schneider Electric Services Representative with approved Schneider Electric tools to configure the unit, retrieve logs, and upgrade firmware. The service port cannot be used for any other purpose. The service port is only active when the Services Representative is within physical proximity to the UPS and manually activates the connection. Do not connect to a network. The connection is not intended for network operation and may cause inoperability of the network.
(9) Connection port for GVLOPT007 (option).
(10) Do not disconnect during operation of the UPS. Do not connect to a network. The connection is not intended for network operation and may cause inoperability of the network.

Operation Modes

The UPS has two different levels of operation modes:

- **UPS mode**: The operation mode of the individual UPS. See UPS Modes, page 21.
- **System mode**: The operation mode of the complete UPS system that supplies the load. See System Modes, page 24.

UPS Modes

eConversion Mode

eConversion provides a combination of maximum protection and highest efficiency, that permits to reduce the electricity absorbed by the UPS by a factor three compared with double conversion. eConversion is now the generally recommended operation mode and is enabled by default in the UPS but it can be disabled via the display menu. When enabled, eConversion can be set to always active or on a set schedule configured through the display menu.

In eConversion the UPS supplies the active part of the load through the static bypass as long as the utility/mains supply is within tolerance. The inverter is kept running in parallel so the input power factor of the UPS is maintained close to unity, regardless of the load power factor, as the reactive part of the load is significantly reduced in the UPS input current. In case of an interruption of the utility/mains supply, the inverter maintains the output voltage providing an uninterrupted transfer from eConversion to double conversion. The batteries are charged when the UPS is in eConversion mode and harmonics compensation is also provided.

eConversion mode can be used for the Galaxy VXL UPS in the following conditions:

- The load on the UPS is >5% for a UPS in a single system.
- The power factor of each phase is >0.5 (leading or lagging).
- Voltage fluctuation is ≤10% versus nominal voltage (adjustable setting from 3% to 10%).

  NOTE: When changes to eConversion mode settings are made on one UPS in a parallel system, the settings are shared to all UPSs in the parallel system.

  NOTE: When a genset/generator is in use and frequency fluctuations are seen (typically due to downsizing), it is recommended to configure an input contact to disable high efficiency modes while the genset/generator is on.

  NOTE: If external synchronization is required, it is generally recommended to disable eConversion.

Double Conversion (Normal Operation)

The UPS supports the load with conditioned power.

Battery Operation

If the utility/mains supply fails, the UPS transfers to battery operation and supports the load with conditioned power from the DC source.

Requested Static Bypass Operation

The UPS can be transferred to requested static bypass operation following a command from the display. During requested static bypass operation, the load is supplied from the bypass source. If a fault is detected, the UPS will transfer to double conversion (normal operation) or forced static bypass operation. If there is an interruption to the utility/mains supply during requested static bypass operation, the UPS will transfer to battery operation.

Forced Static Bypass Operation

The UPS is in forced static bypass operation following a command from the UPS or because the user has pressed the inverter OFF button on the UPS. During forced static bypass operation, the load is supplied from the bypass source.

NOTE: The batteries are not available as an alternate power source while the UPS is in forced static bypass operation.

Maintenance Bypass Operation

When the maintenance bypass disconnect device MBB is closed in the external maintenance bypass cabinet, maintenance bypass panel, or third party switchgear, the UPS transfers to external maintenance bypass operation. The load is supplied with unconditioned power from the bypass source. Service and replacement can be performed on the entire UPS during external maintenance bypass operation via the maintenance bypass disconnect device MBB.

NOTE: The batteries are not available as an alternate power source while the UPS is in external maintenance bypass operation.

Static Bypass Standby Operation

Static bypass standby is only applicable to an individual UPS in a parallel system. The UPS enters static bypass standby operation if the UPS is prevented from entering forced static bypass operation and the other UPSs of the parallel system can support the load. In static bypass standby the output of the specific UPS is OFF. The UPS automatically transfers to the preferred operation mode when possible.

NOTE: If the other UPSs cannot support the load, the parallel system transfers to forced static bypass operation. The UPS in static bypass standby operation will then transfer to forced static bypass operation.

Battery Test Mode

The UPS is in battery test mode when the UPS is performing a battery self-test or a runtime calibration.

NOTE: The battery test will be aborted if the utility/mains supply is interrupted or if a critical alarm is present and the UPS will return to normal operation upon return of utility/mains.

ECO Mode

In ECO mode the UPS uses requested static bypass to power the load as long as the power quality is within tolerance. If a fault is detected (bypass voltage out of tolerance, output voltage out of tolerance, power interruption, etc) the UPS will transfer to double conversion (normal operation) or forced static bypass.

Depending on the transfer conditions, a minimal interruption of the load supply may happen (up to 10 ms). The batteries are charged when the UPS is in ECO mode. The main advantage of ECO mode is a reduction in the consumption of electrical power compared with double conversion.

NOTE: When changes to ECO mode settings are made on one UPS in a parallel system, the settings are shared to all UPSs in the parallel system.

NOTE: ECO mode must be enabled by service before it is available.

OFF Mode

The UPS is not supplying the load with power. The batteries are charged and the display is on.

System Modes

The system mode indicates the output status of the complete UPS system including the surrounding switchgear and indicates which source supplies the load.

eConversion Mode

eConversion provides a combination of maximum protection and highest efficiency, that permits to reduce the electricity absorbed by the UPS by a factor three compared with double conversion. eConversion is now the generally recommended operation mode and is enabled by default in the UPS but it can be disabled via the display menu. When enabled, eConversion can be set to always active or on a set schedule configured through the display menu.

In eConversion the UPS system supplies the active part of the load through the static bypass as long as the utility/mains supply is within tolerance. The inverter is kept running in parallel so the input power factor of the UPS system is maintained close to unity, regardless of the load power factor, as the reactive part of the load is significantly reduced in the UPS system input current. In case of an interruption of the utility/mains supply, the inverter maintains the output voltage providing an uninterrupted transfer from eConversion to double conversion. The batteries are charged when the UPS system is in eConversion mode and harmonics compensation is also provided.

eConversion mode can be used for the Galaxy VXL UPS system in the following conditions:

- The minimum load on the UPSs is >15%.
- The power factor of each phase of each UPS is >0.5 (leading or lagging).
- Voltage fluctuation is ≤10% versus nominal voltage (adjustable setting from 3% to 10%).

NOTE: When changes to eConversion mode settings are made on one UPS in a parallel system, the settings are shared to all UPSs in the parallel system.

NOTE: When a genset/generator is in use and frequency fluctuations are seen (typically due to downsizing), it is recommended to configure an input contact to disable high efficiency modes while the genset/generator is on.

NOTE: If external synchronization is required, it is generally recommended to disable eConversion.

Inverter Operation

In inverter operation the load is supplied by the inverters. The UPS mode can be in either double conversion (normal operation) or battery operation when the UPS system operation mode is inverter operation.

Requested Static Bypass Operation

When the UPS system is in requested static bypass operation, the load is supplied from the bypass source. If a fault is detected, the UPS system will transfer to inverter operation or forced static bypass operation.

Forced Static Bypass Operation

The UPS system is in forced static bypass operation following a command from the UPS system or because the user has pressed the inverter OFF button on the

UPSs. During forced static bypass operation, the load is supplied directly by the bypass source with unconditioned power.

NOTE: The batteries are not available as an alternate power source while the UPS system is in forced static bypass operation.

Maintenance Bypass Operation

In maintenance bypass operation, the load is supplied directly by the bypass source with unconditioned power via the maintenance bypass disconnect device MBB.

NOTE: The batteries are not available as an alternate power source in maintenance bypass operation.

ECO Mode

In ECO mode the UPS system uses requested static bypass to power the load as long as the power quality is within tolerance. If a fault is detected (bypass voltage out of tolerance, output voltage out of tolerance, power interruption, etc) the UPS system will transfer to double conversion (normal operation) or forced static bypass. Depending on the transfer conditions, a minimal interruption of the load supply may happen (up to 10 ms). The batteries are charged when the UPS system is in ECO mode. The main advantage of ECO mode is a reduction in the consumption of electrical power compared with double conversion.

NOTE: When changes to ECO mode settings are made on one UPS in a parallel system, the settings are shared to all UPSs in the parallel system.

NOTE: ECO mode must be enabled by service before it is available.

OFF Mode

The UPS system is not supplying the load with power. The batteries are charged and the display is on.

Frequency Converter Mode

In frequency converter mode, the UPS is able to convert the frequency of the input source to a different frequency on the UPS output. The possible input/output frequencies are 50/50 Hz, 50/60 Hz, 60/50 Hz, and 60/60 Hz. This is set under output frequency. When the UPS is configured as a frequency converter, static bypass is not available. Frequency converter mode can be enabled with battery or without battery.

NOTE: Frequency converter mode and battery enabling/disabling must be configured by Schneider Electric during start-up.

When the UPS is configured for frequency converter mode, the following applies:

- Transfer to static bypass is disabled.
- The status LED for bypass on the system level controller remains OFF.
- Alarms and events related to the static bypass switch and the bypass source are disabled (not shown).
- The static bypass switch symbol and the MBB disconnect device are not shown in the mimic diagram on the UPS display.
- Steps related to bypass operation and MBB disconnect device are not shown in the guided sequences.
- High efficiency mode is not available (eConversion, ECO mode).
- Battery SPoT mode is not allowed.
- Only single mains configuration is supported. Dual mains configuration is not allowed.
- **Autostart of the inverter** is supported for both single UPS system and parallel UPS system.
- Input contacts and output relays cannot be configured for functions related to bypass operation or maintenance bypass operation.

When the UPS is configured as a frequency converter **with battery**, the following applies:

- Battery self-test and battery runtime calibration are supported.

When the UPS is configured as a frequency converter **without battery**, the following applies:

- All settings, commands, measurements, and alarms related to battery are disabled (not shown).
- Battery symbols and battery disconnect devices are not shown in the mimic diagram on the UPS display.
- The status LED for battery on the system level controller remains OFF.
- Battery self-test and battery runtime calibration are not available.
- Steps related to battery operation and battery disconnect devices are not shown in the guided sequences.
- Input contacts and output relays cannot be configured for functions related to battery.

Configuration

Set the Display Language



1. Tap the flag button on the main menu screen.
2. Tap your language.

Change the Password

NOTE: Always change your password on your first login and keep the password in a secure location.

TIP: Create complex passwords to protect your UPS:

- The password should be at least eight characters long.
- The password should be significantly different from previous passwords and from passwords to other devices.
- Use a combination of uppercase letters, lowercase letters, numbers and special characters.

1. Tap **Logout**.
2. Tap **Configuration**.
3. Enter your password.

   NOTE: The default administrator username and password is **admin**.
4. Tap **Change password** and enter the new password.

Configure the UPS Input

NOTE: This configuration is mandatory for correct UPS operation.

1. Tap **Configuration > UPS**.
   a. Set the **Mains configuration** to **Single mains** or **Dual mains**.
   b. Select **Autostart of the inverter** if you want to enable this function. When **Autostart of the inverter** has been enabled, the inverter will start up automatically when input voltage returns, after a shutdown due to drained battery.

      NOTE: Autostart of the inverter is not allowed in a parallel system.

> **⚠⚠DANGER**
>
> **HAZARD OF ELECTRIC SHOCK, EXPLOSION, OR ARC FLASH**
>
> Always perform correct Lockout/Tagout before working on the UPS. A UPS with autostart enabled will automatically restart when the mains supply returns.
>
> **Failure to follow these instructions will result in death or serious injury.**

   c. Set **Transformer present** to **No transformer present**, **Input transformer**, **Output transformer**, or **Input and output transformers**.
   d. Set **Power module redundancy** to **N+0** or **N+1**(11).
   e. Tap **OK** to save your settings and then tap the arrow symbol to go to the next page.

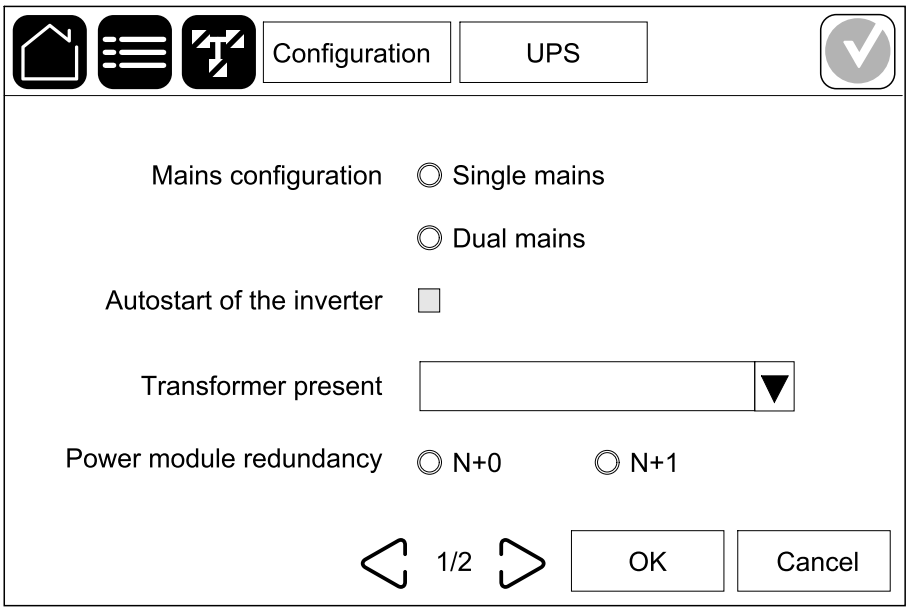

(11) For UPSs where the power rating has been limited to 600 kW (GVXL600K600HS), 800 kW, or 1200 kW, power module redundancy is not available.

2. On the next page, you can view the following settings:
   a. View if **Enable customized input current limit**is disabled or enabled. When **Enable customized input current limit** has been enabled, the input current will be limited to the set maximum values given while the UPS is in inverter operation. This feature can only be enabled and configured by Schneider Electric service.
   b. View the setting for **Maximum input current limit in inverter operation (A)**.
   c. View the setting for **Maximum input current limit in inverter operation while on generator (A)**.
   d. Tap **OK** to save your settings.

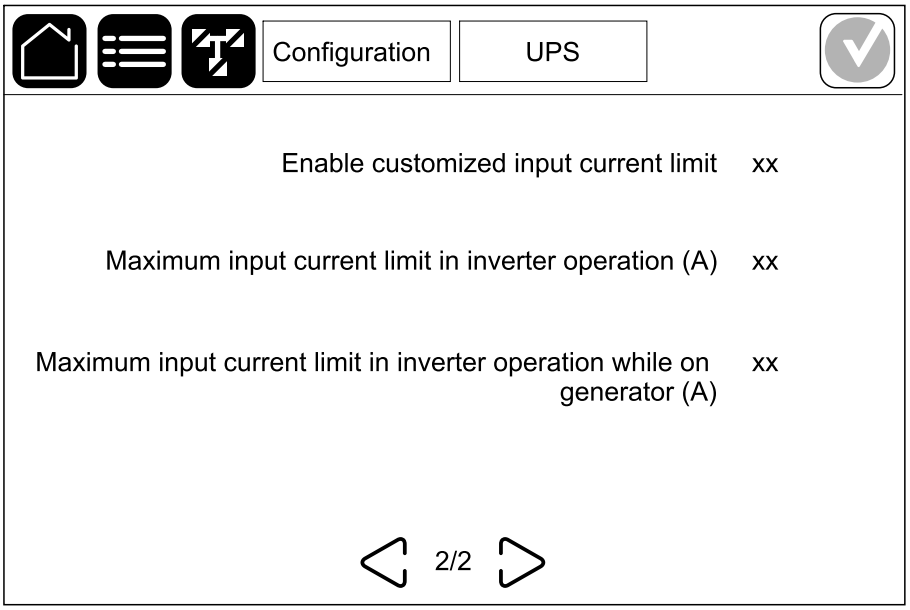

Configure the Output

NOTE: This configuration is mandatory for correct UPS operation.

1. Tap **Configuration > Output**.
   a. Set the **AC voltage ph-ph** to **380VAC**, **400VAC**, or **415VAC** depending on your configuration.
   b. Set the **Frequency** to **50Hz ±1.0**, **50Hz ±3.0**, **50Hz ±10.0**, **60Hz ±1.0**, **60Hz ±3.0**, or **60Hz ±10.0** depending on your configuration.
   c. Tap **OK** to save your settings and then tap the arrow symbol to go to the next page.

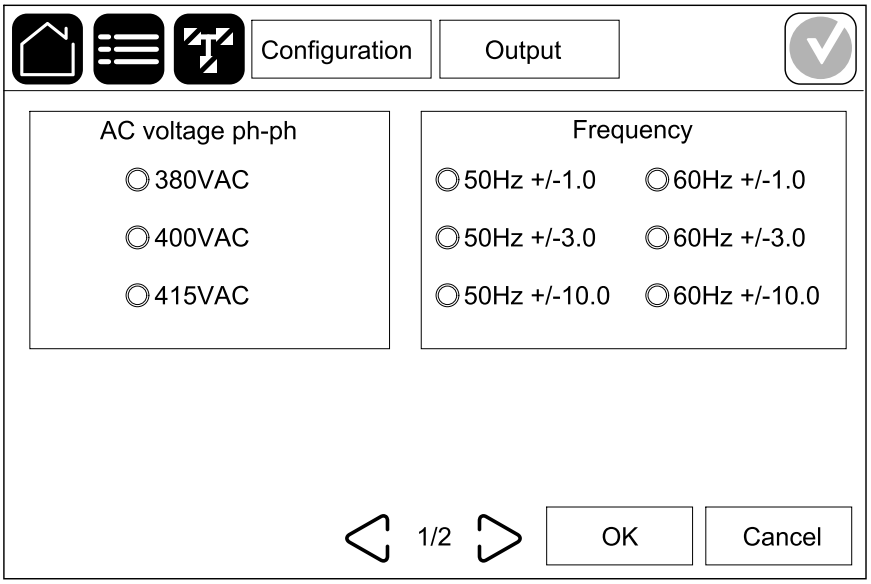

2. On the next page, make the following settings:
   a. Set the **Bypass and output tolerance (%)**. The bypass and output tolerance range is +3% to +10%, default is +10%.
   b. Set the **Voltage compensation (%)**. The output voltage of the UPS can be adjusted up to ±3% to compensate for different cable lengths, default is 0%.
   c. Set the **Overload threshold (%)**. The overload range is 0% to 100%, default is 100%.
   d. Set the **Transformer voltage compensation (%)**. The transformer voltage compensation range is 0% to 3%, default is 0%. See Output Transformer Voltage Compensation, page 31 for more details and Configure the UPS Input, page 28 for configuring that an output transformer is present.
   e. Tap **OK** to save your settings.

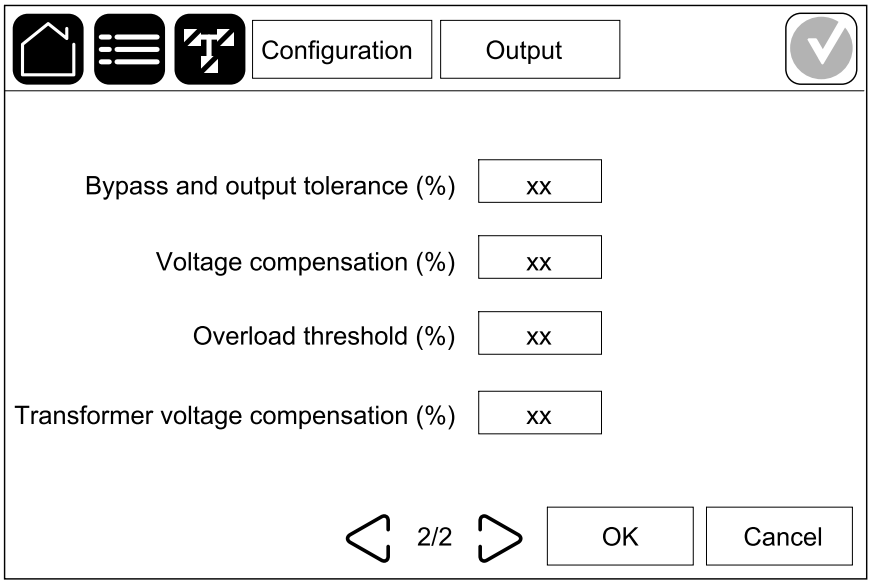

Output Transformer Voltage Compensation

It is possible to compensate for an output transformer and balance the output voltage drop (0-3%).

1. Disconnect the load from the UPS.
2. Measure the voltage on the secondary side of the transformer at 0% load, and adjust the output voltage of the UPS manually via the **Voltage compensation (%)** setting to compensate for the voltage offset, if any .
3. Connect the load to the UPS.
4. Measure the voltage on the secondary side of the transformer again at X% load, and adjust the output voltage of the UPS via the **Transformer voltage compensation (%)** setting to compensate for the voltage drop in the transformer.

The transformer voltage compensation required at the specific load is used to make an automatic linear output voltage adjustment on the UPS according to the output load percentage.

Configure the Battery Solution

⚠⚠DANGER

HAZARD OF ELECTRICAL SHOCK, EXPLOSION, OR ARC FLASH

Battery settings must only be configured by qualified personnel knowledgeable of batteries, battery configuration, and the required precautions.

Failure to follow these instructions will result in death or serious injury.

1. Tap **Configuration > Battery**.
2. Your battery solution type will be shown as:
   - **Standard** if you have a standard battery solution from Schneider Electric the commercial reference for your specific battery configuration will be shown.
   - **Custom** if you have a custom battery solution.

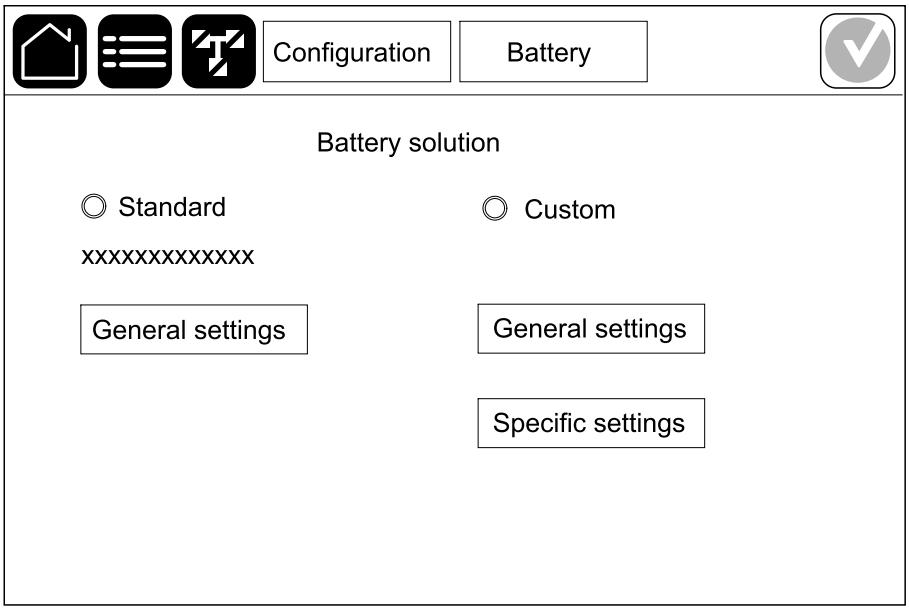

3. Tap **General settings** and set up the following parameters:

   NOTE: On each page, tap **OK** to save your settings and tap the arrow symbol to go to the next page.

Number of battery cabinets connected to the battery breaker	Shows number of battery cabinets connected to the battery disconnect device. Only configurable by Schneider Electric Service.
Low runtime warning (sec)	Set the threshold for remaining runtime in seconds that will activate the low runtime warning.
Charge capacity (%)	Set the maximum charge capacity in percentage of the UPS nominal power rating.
Temperature monitoring	Shows if temperature monitoring is enabled. Only configurable by Schneider Electric Service.
Temperature sensor # 1/Temperature sensor # 2	Shows presence of temperature sensors. Only configurable by Schneider Electric Service.
Minimum threshold	Set the minimum acceptable battery temperature in Celsius or Fahrenheit. Temperatures below this threshold will activate an alarm.
Maximum threshold	Set the maximum acceptable battery temperature in Celsius or Fahrenheit. Temperatures above this threshold will activate an alarm.
Charger autoboost mode	Shows charger autoboost mode. This function will automatically transfer the charger to boost charger mode after the system has been in battery operation. Only configurable by Schneider Electric Service.
Cyclic charge mode	Shows cyclic charge mode. During a cyclic charge, the system cycles between periods of float charging and resting. This function will continuously maintain the battery charge status without stressing the batteries by conducting a permanent float charging. Only configurable by Schneider Electric Service.
Test interval every	Set how often the UPS should run a battery test.
Test day of the week	Set on which day of the week the battery test should run.
Test start time (hh:mm)	Set which time of day the battery test should run.
Manual battery self-test mode	Set which battery test type should run: **By capacity** or **By voltage/time**. **By capacity** will discharge the batteries and use about 10% of the total capacity. **By voltage/time** will discharge the batteries to a set time or voltage.
Time limit (minutes)/Voltage limit (V)	If you chose battery test type **By voltage/time**, set the time limit or set the voltage limit.
Battery charge power during genset supply	Set the reduction in battery charge current, while the input contact indicating **UPS on generator** is active, to **0%** (no battery charging), **10%**, **25%**, **50%**, **75%**, or **100%** (full battery charging).

4. **Only for custom battery solution**: Tap **Specific settings** to view the following settings:

   NOTE: These settings are only configurable by Schneider Electric Service.

Battery type	Shows the configured battery type.
Battery midpoint connected	Shows if battery midpoint is connected.
Disable temperature monitoring	Shows if temperature monitoring is disabled.
Allow boost charge	Shows if boost charge is allowed. Boost charging makes it possible to conduct a fast charging in order to quickly restore a discharged battery.
Allow battery deep discharge	Shows if battery deep discharge is allowed. The deep discharge function allows to discharge the batteries to an even lower voltage level than the normally recommended value when in battery operation. Note that this may damage the batteries.
Enable battery automatic disconnect	Shows if battery automatic disconnect is enabled. When the UPS output is off and no ability to charge the batteries is available, this function will trip the battery disconnect devices to avoid battery deep discharge after a period of: • Two weeks. • 10 minutes with the battery cell voltage below the low battery shutdown level.
Capacity per battery block (Ah)	Shows the battery capacity per battery block in ampere hours for the battery bank connected to each battery disconnect device.
Number of parallel battery strings	Shows the number of battery strings connected in parallel for the battery bank connected to each battery disconnect device.
Number of battery blocks per string	Shows the number of battery blocks per battery string.
Number of battery cells per block	Shows the number of battery cells per battery block.
DC voltage per battery cell (V)	Shows the float voltage. Float charging is the basic charging function available on all types of batteries and automatically initiated by the charger.
	Shows the boost voltage. Boost charging makes it possible to conduct a fast charging in order to quickly restore a discharged battery.
	Shows the equalization voltage. Equalization charging is used when equalizing skewed open cell batteries. This is the charging method available using the highest possible charging voltage level. When equalization charging is conducted, water is evaporated from the open cell batteries which must be replaced when charging is completed.
Charge duration (sec)	Shows the duration in seconds of the charge for **Boost** charging and **Equalization** charging.
Nominal battery cell voltage (V)	Shows the nominal voltage level per battery cell.
DC shutdown voltage per battery cell (V)	Shows the voltage level per battery cell for when the battery must be shut down.

Nominal temperature	Shows the nominal temperature in Celsius or Fahrenheit.
Charge current rate	Shows the charge current rate.

Configure High Efficiency Mode

1. Tap **Configuration > High efficiency**.
2. Select the **High efficiency mode**: **Disable**, **ECO mode**, **eConversion**. If high efficiency mode has been disabled by the system due to battery discharge over the configured limit, **Disabled by system** will be marked.

   NOTE: Contact Schneider Electric to enable **ECO mode**.
3. Select **eConversion harmonics compensator**, if relevant. This setting improves power quality while in eConversion mode by providing limited compensation of input current harmonics. This setting is only selectable when eConversion is enabled.
4. Select **eConversion transfer loop duration**: **10 sec**, **10 min**, **30 min**, or **60 min**. The default setting is **10 sec**. This setting will control how long the UPS will stay in inverter operation after exiting eConversion mode due to input or bypass disturbance. When the set **eConversion transfer loop duration** has been met, the UPS will return automatically to eConversion. This setting is only selectable when eConversion is enabled.
5. Select the **High efficiency schedule**: **Active on schedule**, **Always active**, or **Never active**.
   a. For **Active on schedule**, tap **Schedule** and set up and enable the schedule(s) as needed.

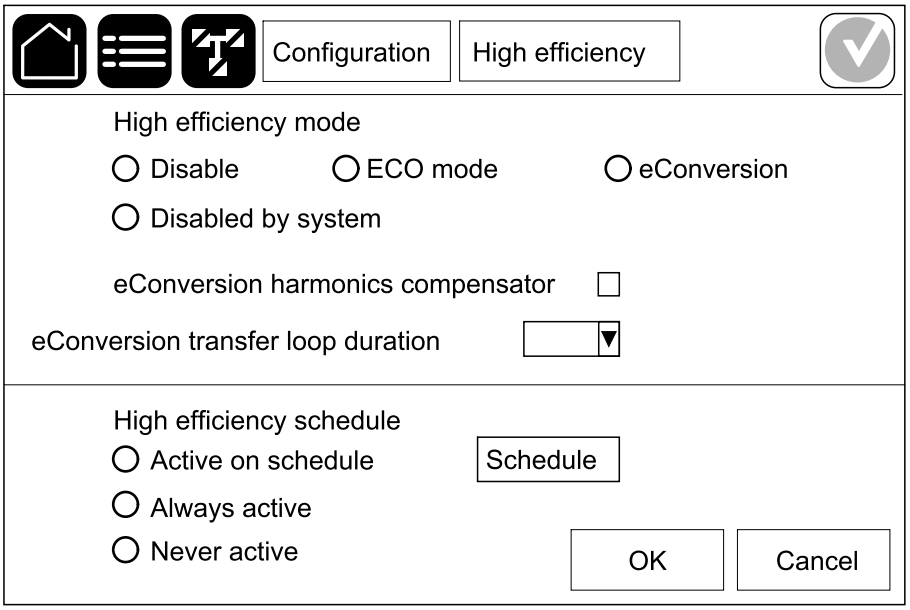

View Configuration for Prioritizing Battery Operation When Input Contact is Activated

The feature **Prioritize battery operation when input contact is activated** allows you to prioritize battery operation to remove your load from the grid at certain times/in certain situations, controlled by an input contact signal. When this feature is enabled, the UPS will transfer to battery operation on an input contact signal. The UPS will only transfer to battery operation if battery operation is possible, i.e. if there is sufficient runtime available from the batteries and no other restrictions are detected. When the input contact signal is deactivated, the UPS will return to its default operation mode. This feature is only configurable by Schneider Electric Service Representatives.

1. Tap **Configuration > Grid interactive UPS** to see if **Prioritize battery operation when input contact is activated** is enabled or disabled.

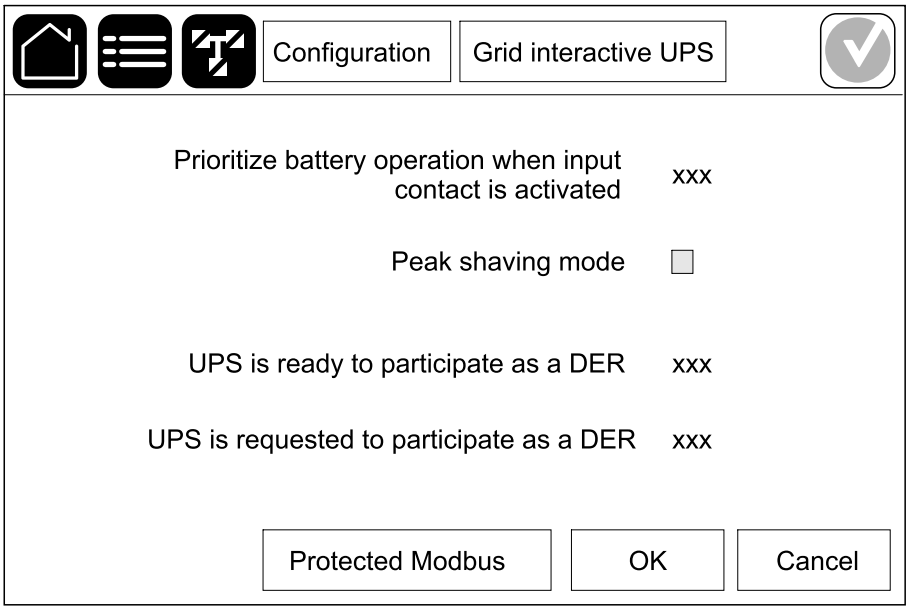

Enable Peak Shaving Mode

Peak shaving mode allows the UPS to reduce the power consumed from the utility/mains supply during grid peak periods, and to supplement power to the load with power from the battery.

NOTE: Peak shaving mode must be enabled locally by Schneider Electric during service configuration to make this selection available, but it must be controlled via a remote software application. The remote software application is connected through protected write for Modbus. Contact Schneider Electric for more details.

1. From the home screen on the display, select **Configuration > Grid interactive UPS**.
2. Select **Peak shaving mode** if you want to enable this function.

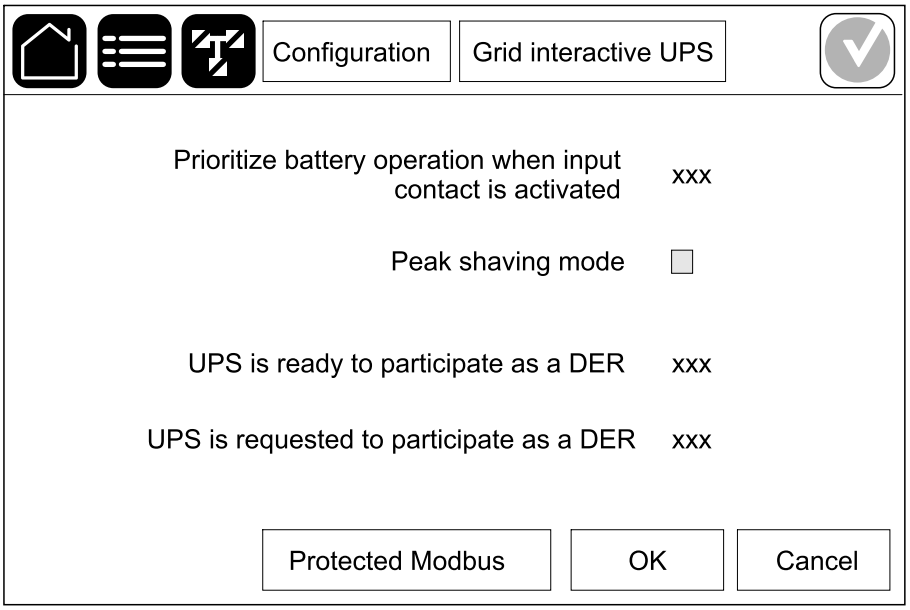

3. Tap on **Protected Modbus** to view the preshared keys for the protected write for Modbus. You can modify the preshared keys directly on this screen or tap on the button **Generate new keys** to generate new keys automatically. **Protected Modbus** is an encrypted bi-directional handshake protocol using exchange keys and authentication codes. The write requests for peak shaving mode settings from the external system are only accepted by the UPS if they pass the requirements from the **Protected Modbus** handshake protocol.

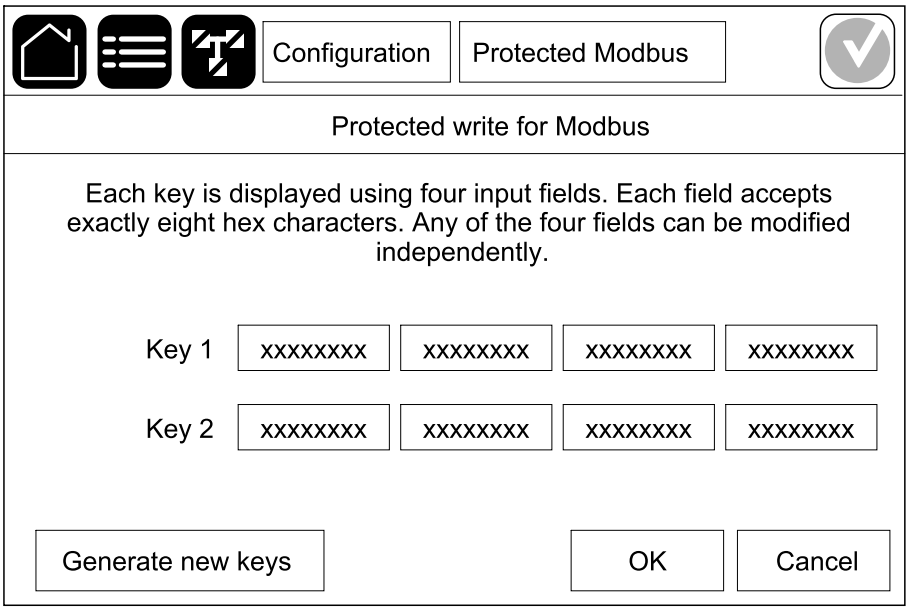

4. Tap **OK** to confirm your settings.

View Status for UPS Participation as Distributed Energy Resource (DER)

A UPS system that includes a battery has the possibility to operate as a distributed energy resource (DER) by using energy from the battery instead of from the power grid to supply the load. An external system can request the UPS to transfer from double conversion operation to battery operation when a frequency drop is detected on the grid. This will reduce the load on the grid corresponding to the load on the UPS output and support to stabilize the power grid frequency. When the support duration is over, the external system will end the request and the UPS will transfer back to double conversion operation and ramp in the load to the power grid. The UPS system must be installed in an fast frequency reserve (FFR) setup to participate as DER. FFR is only available in limited power grids as per national rules.

DER participation conditions for the UPS:

- DER mode is enabled for the UPS.
- The input contact for **Genset is supplying the UPS** is not active/triggered.
- The battery is operable.
- The UPS operation mode is inverter operation or eConversion/ECO mode.
- The battery state of charge (SoC) is above the configured minimum level.
- The UPS output is not overloaded.
- The communication link with the external controller is active.
- A participation allowed command from the external controller is active.
- Input contact timeout has not occurred.

1. Tap **Configuration > Grid interactive UPS**.

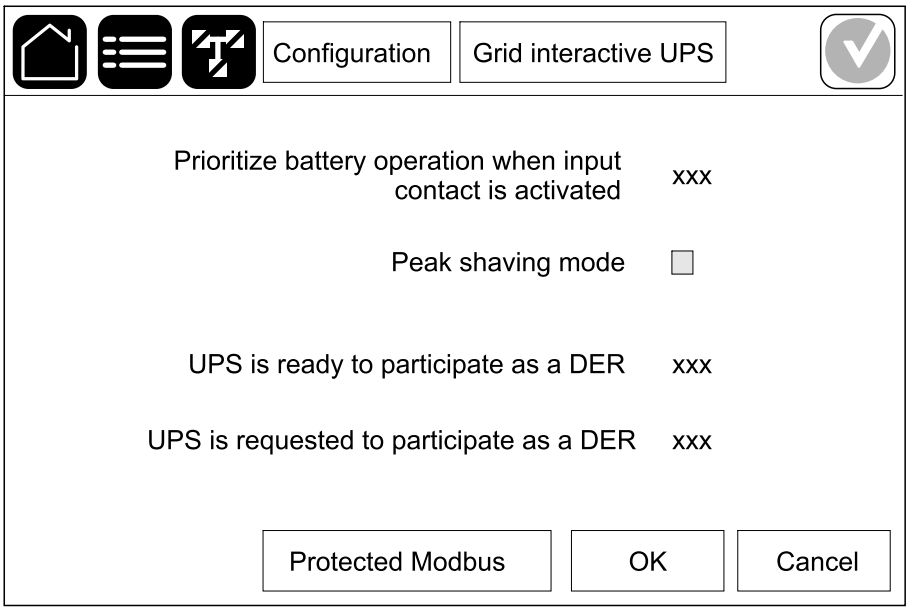

When the DER participation conditions are met, the UPS is ready to participate as a DER and the screen will show **UPS is ready to participate as a DER**: **Enable**. When a DER participation command is received from the external management system via protected Modbus, then **UPS is requested to participate as a DER**: **Enable** will show on the screen.

Configure the Disconnect Devices

NOTE: This configuration is mandatory for correct UPS operation.

1. Tap **Configuration > Breakers**.
2. Tap the different disconnect devices in the mimic diagram to configure which disconnect devices are present in the UPS system. Square with a √ means that the disconnect device is present, empty square means that the disconnect device is not present. BF2 presence can only be configured by Schneider Electric Service.

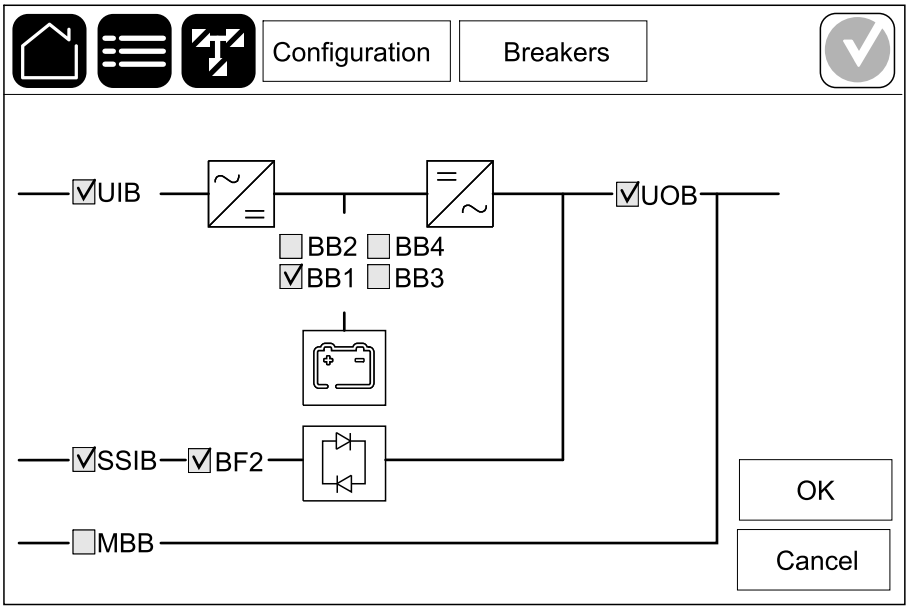

NOTE: The UPS can monitor up to four battery disconnect devices in a battery solution. The mimic diagram only shows one battery disconnect device BB even if more battery disconnect devices have been connected and configured for monitoring. If one or more of the monitored battery disconnect devices are in the closed position, the BB on the mimic diagram will show as closed. If all of the monitored battery disconnect devices are in the open position, the BB on the mimic diagram will show as open.

3. Tap **OK** to save your settings.

Configure the Input Contacts

1. Tap **Configuration > Contacts and relays** and select the input contact that you want to configure.
2. Select a function from the list for the selected input contact:

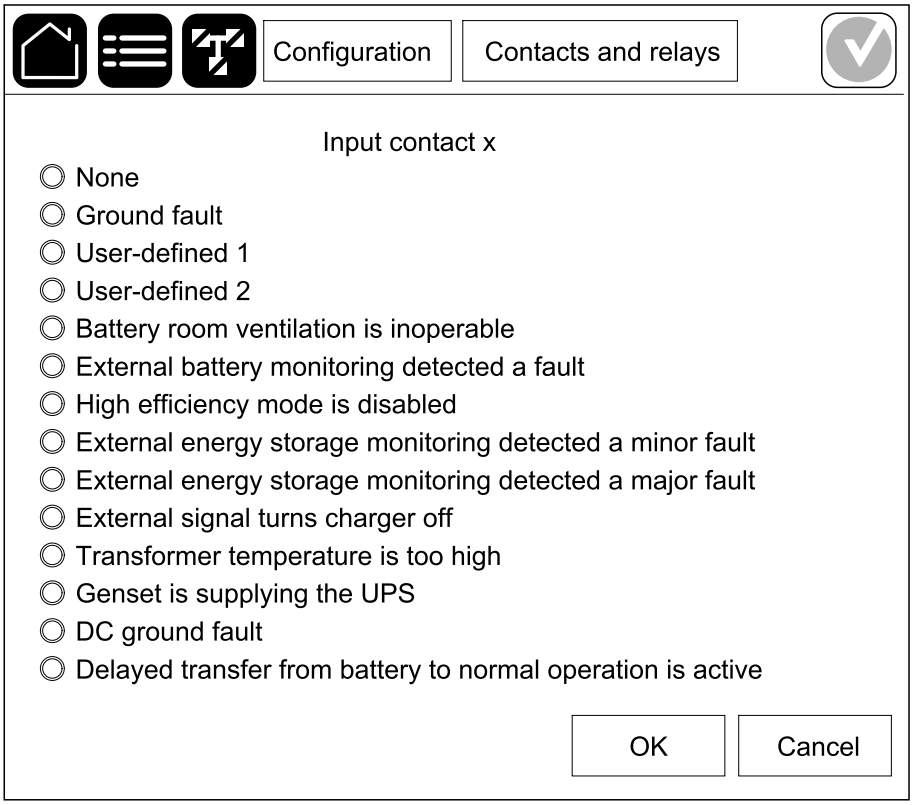

None: No action assigned to this input contact.	**Genset is supplying the UPS**: Input to indicate that the UPS is being supplied by a generator.
Ground fault: Input to indicate that a ground fault is present.	**Battery room ventilation is inoperable**: Input to indicate that the battery room ventilation is inoperable. When the input is active, the battery charger will turn OFF.
User-defined 1: General purpose input.	**External battery monitoring detected a fault**: Input to indicate that the external battery monitoring has detected a fault. When the input is active, the UPS will post an alarm (no other action).
User-defined 2: General purpose input.	**High efficiency mode is disabled**: If this input is activated, the UPS is prevented from entering high efficiency mode (ECO mode and eConversion mode) or will exit any active high efficiency mode.
External energy storage monitoring detected a minor fault: Input to indicate that the external energy storage monitoring has detected a minor fault.	**External signal turns charger off**: If this input is activated, the charger will turn OFF on a signal from external equipment, e.g. on a signal from the external energy storage.

External energy storage monitoring detected a major fault: Input to indicate that the external energy storage monitoring has detected a major fault.	**Transformer temperature is too high**: Input to indicate that there is a high temperature alarm for the transformer.
DC ground fault: Input to indicate that a DC ground fault is present.	**Delayed transfer from battery to normal operation is active**: Input to indicate that delayed transfer from battery to normal operation is active. **NOTE:** This function can only be configured for an input contact by Schneider Electric. Once an input contact is configured for this function, the specific input contact can only be reconfigured for another function by Schneider Electric.

3. Tap **OK** to save your settings.

Configure the Output Relays

1. Tap **Configuration > Contacts and relays** and select the output relay that you want to configure.
2. Set the **Delay (sec)**.

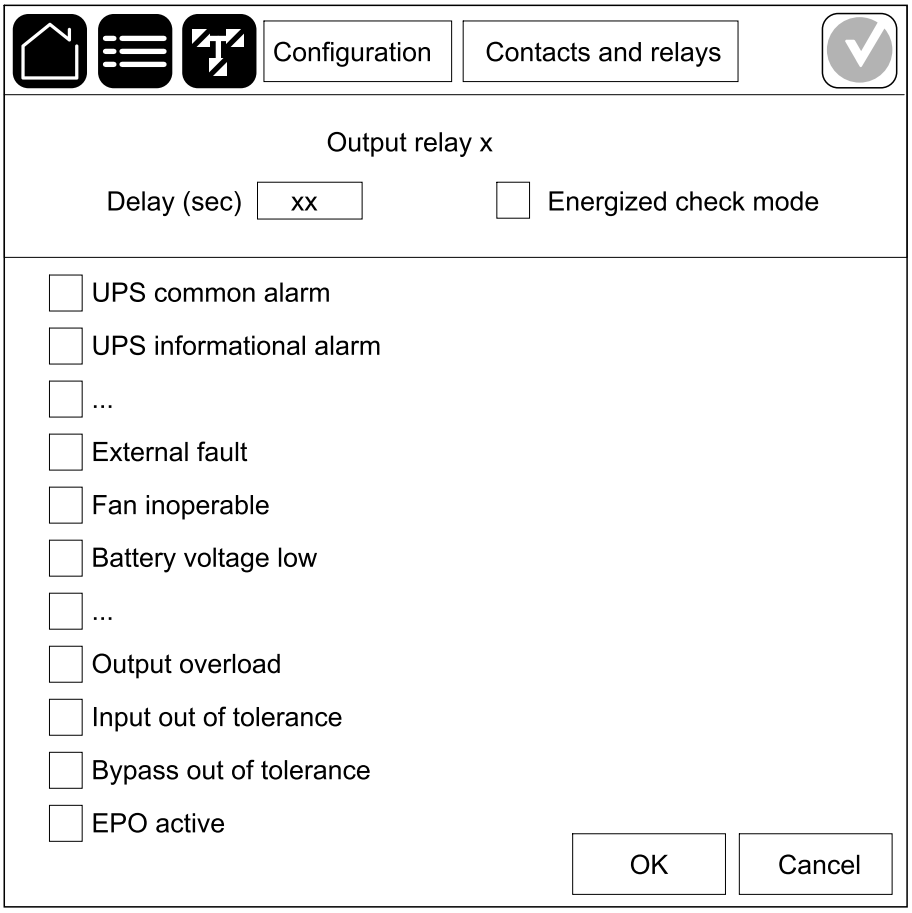

3. Select to enable **Energized check mode** (disabled as default).

   When **Energized check mode** is enabled, the output relay is activated, and will deactivate when the events assigned to the output relay occurs (normally activated).

   When **Energized check mode** is disabled, the output relay is deactivated, and will activate when the events assigned to the output relay occurs (normally deactivated).

   Energized check mode must be individually enabled for each output relay and makes it possible to detect if the output relay is inoperable:

   - If the power supply to the output relays is lost, the events assigned to all the output relays will be indicated as present.
   - If a single output relay has become inoperable, the events assigned to the single output relay will be indicated as present.

4. Select the event(s) you want to assign to the output relay.

   NOTE: It is possible to assign several functions to the same output relay.

UPS common alarm: The output is triggered when any alarm is present for the UPS.	**UPS in maintenance mode**: The output is triggered when the unit output disconnect device UOB has been opened which transfers the UPS to maintenance mode. The UPS is not supplying the load.
UPS informational alarm: The output is triggered when an information alarm is present for the UPS.	**External fault**: The output is triggered the UPS detects an external fault.
UPS warning alarm: The output is triggered when a warning alarm is present for the UPS.	**Fan inoperable**: The output is triggered when one or more fans are inoperable.
UPS critical alarm: The output is triggered when a critical alarm is present for the UPS.	**Battery voltage low**: The output is triggered when the battery voltage is below the threshold.
System common alarm: The output is triggered when any alarm is present for the system.	**Battery is not working correctly**: The output is triggered when the batteries are not working correctly.
System informational alarm: The output is triggered when an information alarm is present for the system.	**Battery is disconnected**: The output is triggered when the batteries have been disconnected or the battery disconnect device(s) are open.
System warning alarm: The output is triggered when a warning alarm is present for the system.	**Inverter overload**: The output is triggered when there is an overload condition, while the UPS is in inverter operation.
System critical alarm: The output is triggered when a critical alarm is present for the system.	**Output overload**: The output is triggered when there is an overload condition, while the UPS is in inverter operation or bypass operation.
UPS in normal operation: The output is triggered when the UPS is in normal operation.	**Input out of tolerance**: The output is triggered when the input is out of tolerance.
UPS in battery operation: The output is triggered when the UPS is in battery operation.	**Bypass out of tolerance**: The output is triggered when the bypass is out of tolerance.
UPS in static bypass operation: The output is triggered when the UPS is in forced static bypass operation or requested static bypass operation.	**EPO active**: The output is triggered when the EPO has been activated.
UPS in maintenance bypass operation: The output is triggered when the UPS is in internal maintenance bypass operation or external maintenance bypass operation.	

5. Tap **OK** to save your settings.

Configure Power Smoothing for an AI Load

NOTE: This feature is only supported in 4-wire installations.

The feature power smoothing for an AI load limits the rate of change of UPS input current to the grid. It prevents large and rapid load variations (typical of AI loads) from being directly reflected on the input side by using the battery as an energy buffer.

1. Tap **Configuration > AI load**.

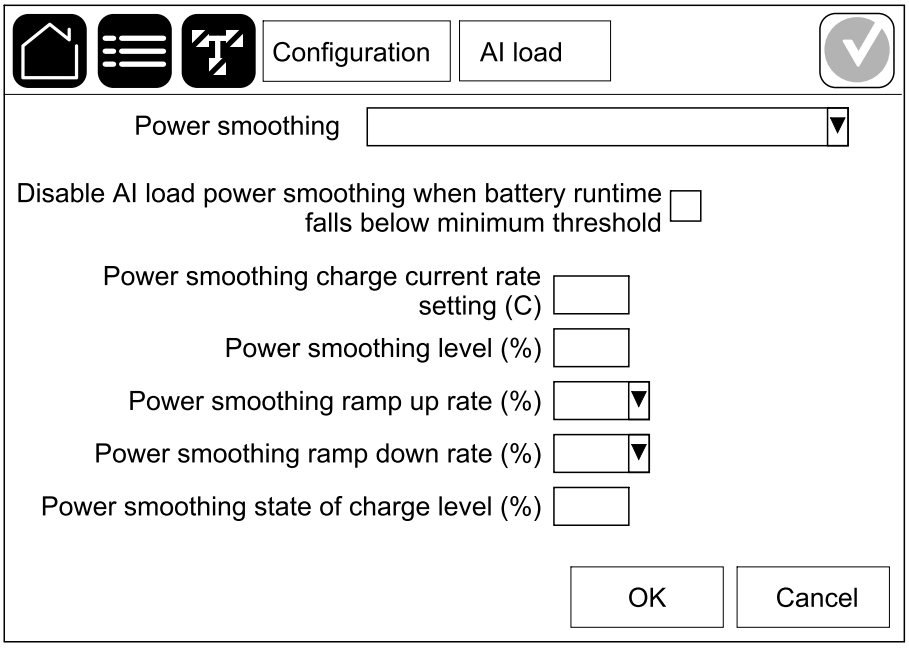

2. Select **Power smoothing**: **Never active**, **Always active**, or **Active when supplied by generator**.
3. Select **Disable AI load power smoothing when battery runtime falls below minimum threshold** if you want to enable this function (disabled by default). When **Disable AI load power smoothing when battery runtime falls below minimum threshold** has been selected, AI load smoothing will end when the available battery runtime falls below the set threshold for **Low runtime warning (sec)**. Go to **Configuration > Battery > General settings** to see or configure the threshold for **Low runtime warning (sec)**.
4. Set up the following parameters for AI load power smoothing:

Power smoothing charge current rate setting (C)	Settings range: 0.1 to 10.0. Default is 0.8.
Power smoothing level (%)	The power smoothing level defines the load variation threshold that activates power smoothing. This setting is fixed at 100% which means that smoothing is activated for any load variation.
Power smoothing ramp up rate (%)	The setting unit is % of UPS kW rating per second. Settings range: 0.5 %, 0.6 %, 0.7 %, 0.8 %, 0.9 %, 1.0%, 2.0%, 3.0%, 4.0%, 5.0%, 6.0%, 7.0%, 8.0%, 9.0%, 10.0%, 11.0%, 12.0%, 13.0%, 14.0%, 15.0%, 16.0%, 17.0%, 18.0%, 19.0%, 20.0%. Default is 10%.

Power smoothing ramp down rate (%)	The setting unit is % of UPS kW rating per second. Settings range: 0.5 %, 0.6 %, 0.7 %, 0.8 %, 0.9 %, 1.0%, 2.0%, 3.0%, 4.0%, 5.0%, 6.0%, 7.0%, 8.0%, 9.0%, 10.0%, 11.0%, 12.0%, 13.0%, 14.0%, 15.0%, 16.0%, 17.0%, 18.0%, 19.0%, 20.0%. Default is 10%.
Power smoothing state of charge level (%)	The nominal battery state of charge (SoC) for AI load power smoothing is the target state of charge that the smoothing function will seek to achieve and stay at. Keeping the state of charge at this level (below 100%) ensures that the battery can both accommodate to be charged and discharged (operate as an energy buffer) to smoothen the input current when supplying an AI load, and still provide sufficient backup time in battery operation. Settings range: 40% to 90%. Default is 85%.

Configure Settings for Fault Ride-Through (FRT)

NOTE: Fault ride-through (FRT) is only supported in normal operation. Fault ride-through (FRT) is not supported in high efficiency mode (eConversion mode or ECO mode). If the UPS is in high efficiency mode (eConversion or ECO mode) during an FRT situation, the UPS will transfer directly to battery operation. If FRT capability is required, it is recommended to disable high efficiency mode, see Configure High Efficiency Mode, page 35.

1. Tap **Configuration > FRT**.

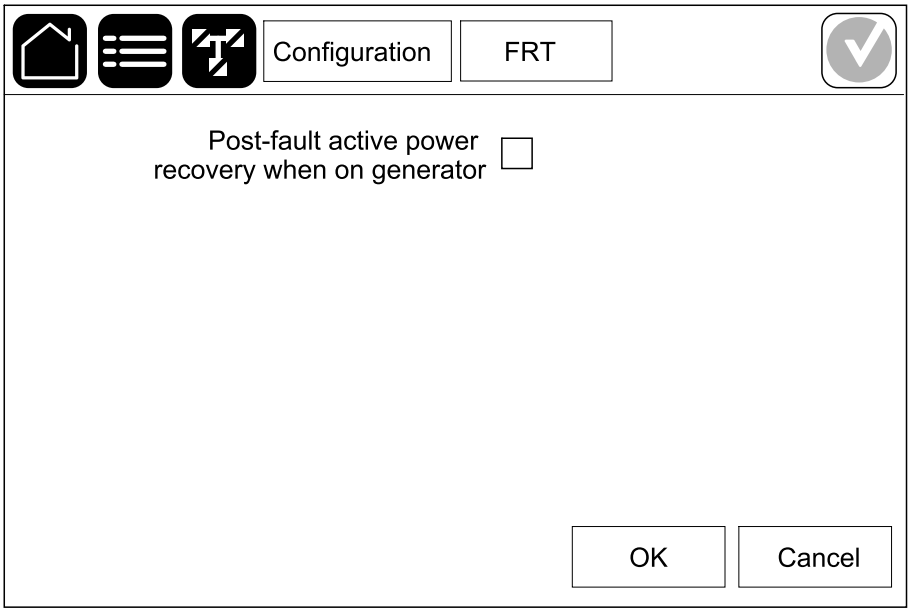

2. Select **Post-fault active power recovery when on generator** if you want to enable this function. When **Post-fault active power recovery when on generator** has been selected, the UPS will return rapidly from battery operation to generator supply as part of fault ride-through (FRT) support. When this setting is not selected, the UPS will not transfer rapidly from battery operation to generator supply, but instead the longer standard ramp-in time will be used to return from battery operation to generator supply.

Fault ride-through (FRT): This is the capability for the UPS system to remain connected during short-lived voltage disturbances in the grid.

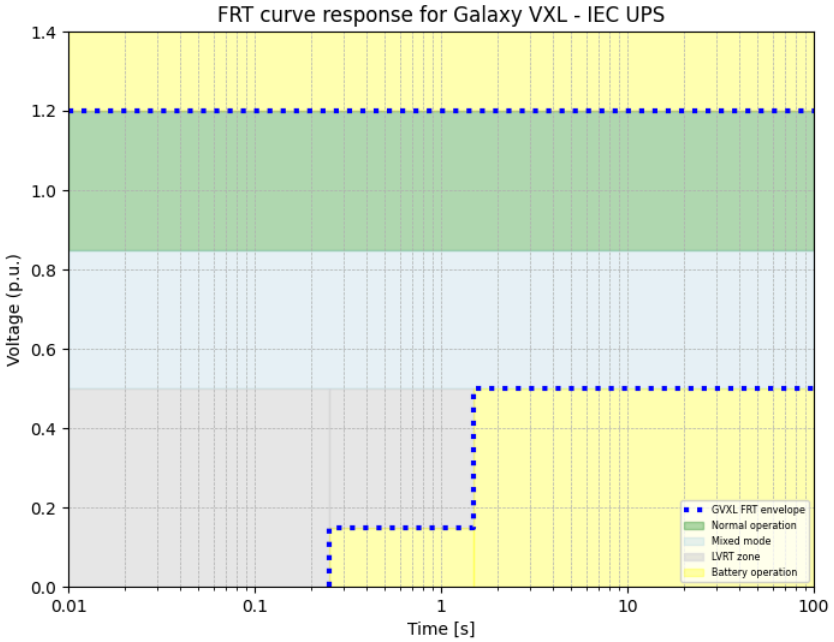

FRT support includes the following:

High voltage ride-through (HVRT): This is enabled by default. The upper limit of HVRT in a 400 V UPS system is 1.2 pu continuous. For a 380/415 V UPS system, the upper limit is 1.15 pu continuous. HVRT can only be enabled/disabled by Schneider Electric service.

Grid RMS voltage swell (% of nominal voltage)	Minimum ride through time for HVRT
V > 120%	Ride-through not required. The UPS will transfer to battery operation.
115% < V <= 120%(12)	Continuous. The UPS must stay in normal operation (only 400 V).
100% < V <= 115%	Continuous. The UPS must stay in normal operation.

Low voltage ride-through (LVRT): is a default function. No settings required.

Grid RMS voltage sags (% of nominal voltage)	Minimum ride through time for LVRT
85% < V < 100%	Continuous. The UPS will stay in normal operation.
50% < V <= 85%	Continuous. The UPS will stay in normal operation but draws current from the battery if required (load dependent – mixed mode operation).
15% < V <= 50%	1.5 seconds. The UPS will stay in normal operation but draws all current from the battery. The UPS must transfer to battery operation when the ride-through time has elapsed.
0% < V <= 15%	0.25 seconds. The UPS will draw all power from battery, but stay connected to the grid. When ride-through time has elapsed, it will transfer to battery operation and disconnect from grid.

Post-fault active power recovery (PFAPR): If the input voltage recovers from LVRT zone within the ride-through time limitation, the UPS recovers and draws full power from the grid (input) within 0.3 seconds. This fast ramp-in is called post-fault active power recovery (PFAPR). If the UPS has transferred to battery operation and been disconnected from grid due to the input fault, the UPS cannot do a PFAPR, but will run standard ramp-in when input recovers. If PFAPR is configured as disabled when the UPS is on generator, the UPS will not perform PFAPR if the input contact indicating **UPS on generator** is active. The UPS must then perform the standard ramp-in.

Frequency ride-through window: The frequency window for the UPS operation is 40-70 Hz which is wider than the grid requirements and covers all known Transmission System Operators (TSO) specifications. No settings required.

Rate of change of frequency (RoCoF): This is specified from different Transmission System Operators (TSOs) as originally 1 Hz/s, but now ranges from 2 Hz/s to 5 Hz/s, which is within the capabilities of the UPS. No settings required.

(12) At 380 V and 415 V, the max value must be 115%, and not 120% (415 V due to hardware limitations, 380 V due to limited adoption of FRT presently).

Configure the Network

The network can be configured for the integrated and the optional network management card (NMC).

1. Tap **Configuration > Network** and select **IPv4** for the **Integrated NMC** to configure the integrated network management card or for the **Optional NMC** to configure the optional network management card (if present).

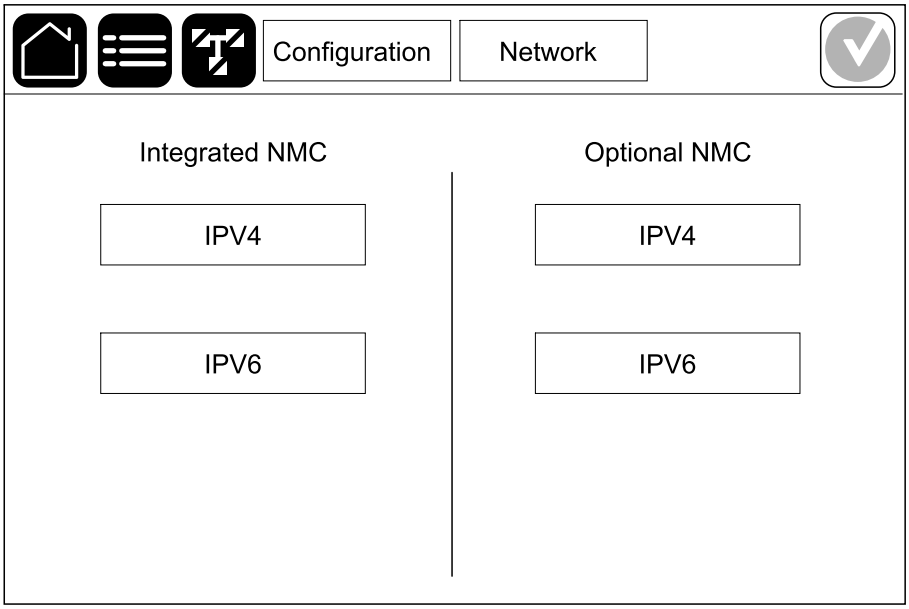

2. Configure the IPv4 settings on the page for the chosen NMC:

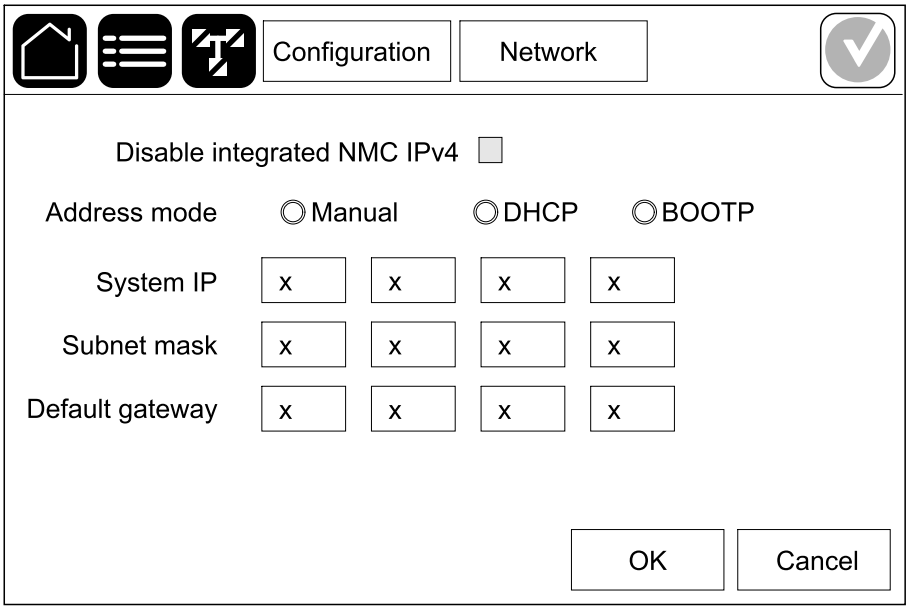

   a. Remove the check mark for **Disable integrated NMC IPv4**/**Disable optional NMC IPv4** to configure the **IPv4**. When the check mark is present, no settings can be made and the function is disabled.

   b. Set the **Address mode** to **Manual**, **DHCP**, or **BOOTP**. For manual address mode, add the values.

   c. Tap **OK** to save your settings.

3. Tap **Configuration > Network** and select **IPV6** for the **Integrated NMC** to configure the integrated network management card or for the **Optional NMC** to configure the optional network management card (if present).

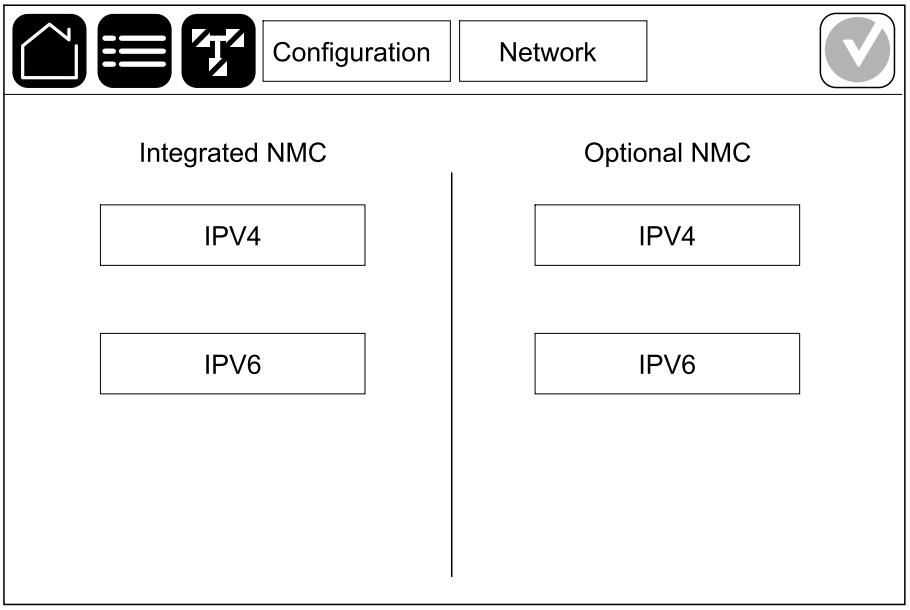

4. Configure the IPv6 settings on the page for the chosen NMC:

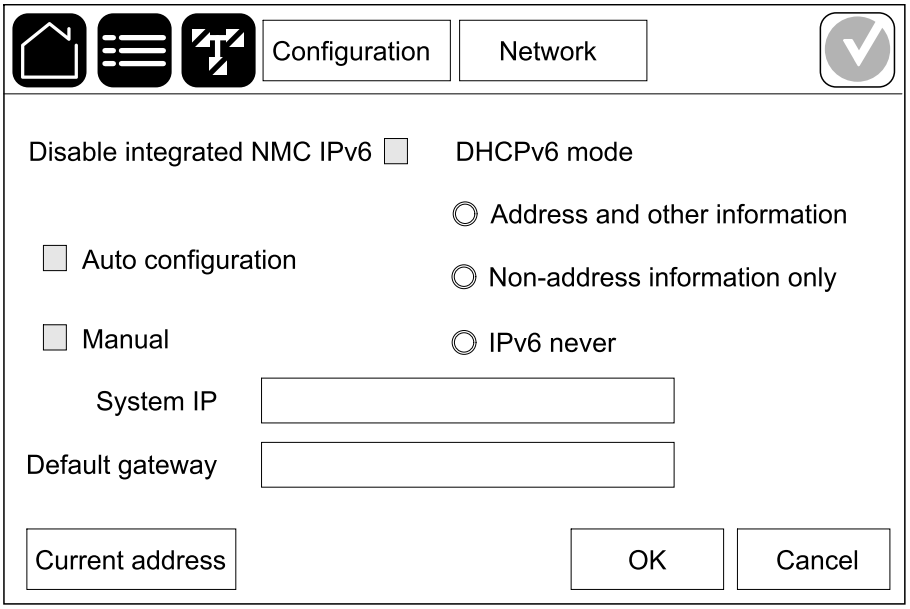

   a. Remove the check mark for **Disable integrated NMC IPv6**/**Disable optional NMC IPv6** to configure the **IPv6**. When the check mark is present, no settings can be made and the function is disabled.

   b. Set the **DHCPV6 mode** to **Address and other information**, **Non-address information only**, or **IPv6 never**.

   c. Select **Auto configuration** or **Manual**. For manual mode, add the values.

   d. Tap **OK** to save your settings.

5. Repeat the steps to configure the other NMC, if needed.

Configure the Modbus

The Modbus can be configured for the integrated and the optional network management card (NMC).

1. Tap **Configuration > Modbus** and select **Integrated NMC** to configure the integrated network management card or **Optional NMC** to configure the optional network management card (if present).

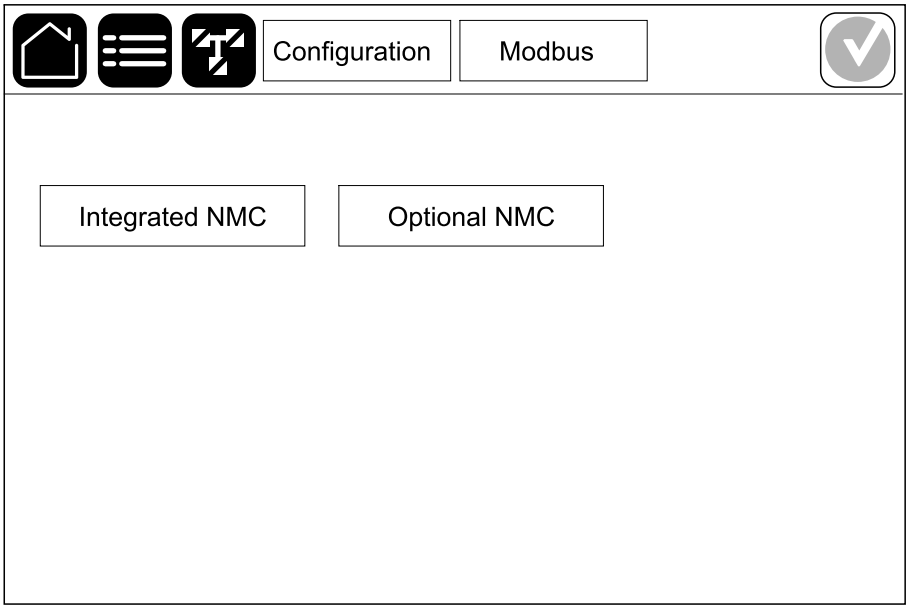

2. Configure the settings on the first page for the chosen NMC:

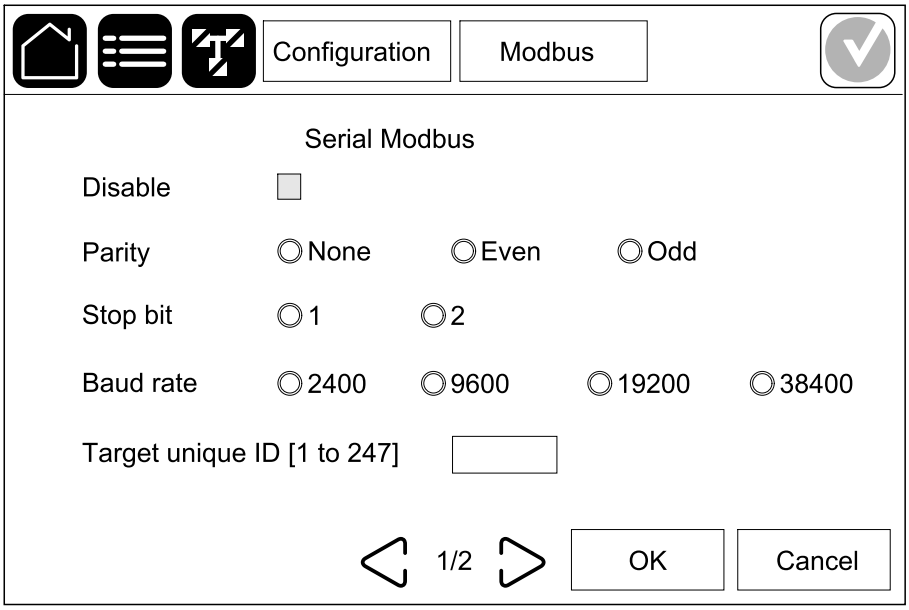

NOTE: Modbus RTU and BACnet MS/TP protocols cannot both be enabled. If you want to configure Modbus on the display, disable BACnet MS/TP access via the network management card web interface or CLI.

a. Remove the check mark for **Disable** to configure the **Serial Modbus**. When the check mark is present, no settings can be made and the function is disabled.

b. Set the **Parity** to **None**, **Even**, or **Odd**.

c. Set the **Stop bit** to 1 or 2.

d. Set the **Baud rate** to **2400**, **9600**, **19200**, or **38400**.

e. Set the **Target unique ID** to a number between 1 and 247.

NOTE: Every device on the bus must have exactly the same settings except the device address **Target unique ID**, which must be unique for every device. No two devices on the bus can have the same address.

f. Tap **OK** to save your settings and tap the arrow symbol to go to the next page.

3. Configure the settings on the second page:

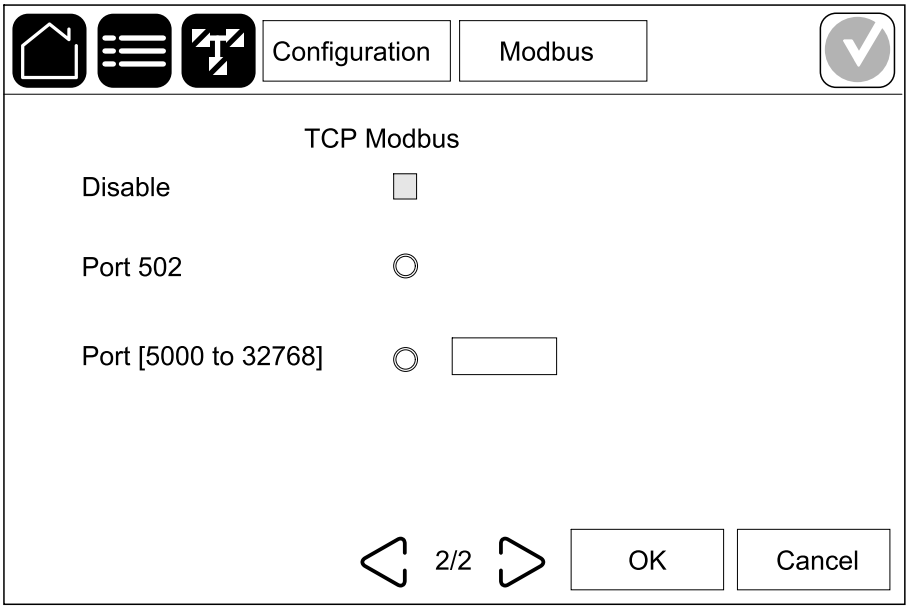

a. Remove the check mark for **Disable** to configure the **TCP Modbus**. When the check mark is present, no settings can be made and the function is disabled.

b. Select **Port 502** or **Port [5000 to 32768]**.

c. Tap **OK** to save your settings.

4. Repeat the steps to configure the other NMC, if needed.

Set the UPS Name

1. Tap **Configuration > General > UPS name**.
2. Set the UPS name.
3. Tap **OK** to save your settings.

Set the Date and Time

1. Tap **Configuration > General > Date and time**.
2. Set the **Year**, **Month**, **Day**, **Hour**, **Minute**, and **Second**.
3. Tap **OK** to save your settings.

Configure the Display Preferences

1. Tap **Configuration > General > Display**.
   a. Set the **Alarm sound** to **Enable** or **Disable**. This will enable/mute all alarm sounds.
   b. Set the **Alarm sound (informational alarms only)** to **Enable** or **Disable**. This will enable/mute all informational alarm sounds.
   c. Set the temperature unit to **Celsius** or **Fahrenheit**.
   d. Set the **Screen saver on after** to **5 min**, **15 min**, **30 min**, or **Never**. The screen saver will turn on after the set time where no activity has been performed on the display.
   e. Set the **Display brightness** by tapping the - or +.
   f. Set the **Touch screen sound** to **Enable** or **Disable**. This will enable/mute all display sounds (excluding alarm sounds).
   g. Calibrate the touch functionality of the display by tapping the calibration button twice.

Configure the LED Strip on the Front Door

1. Tap **Configuration > General > LED strip**.
2. Select **Enable UPS status via LED strip**. When enabled, the LED strip on the front door of the UPS will show the UPS status. This feature is disabled by default.
3. Tap **OK** to save your settings.

See LED Strip Lighting per UPS Operation Mode, page 85 for more details.

Configure the Air Filter Reminder

When the air filter has been replaced, reset the air filter reminder.

1. Tap **Configuration > Reminder**.
   a. Select **Enable reminder** to get reminders about replacing the air filter.
   b. Select the reminder interval: **1 month**, **3 months**, **6 months**, or **1 year** based on the installation room environment.

      Under **Remaining time (weeks)** you can see how much service life the air filter in use has left.
   c. Tap **Reset** to reset the air filter service life counter.

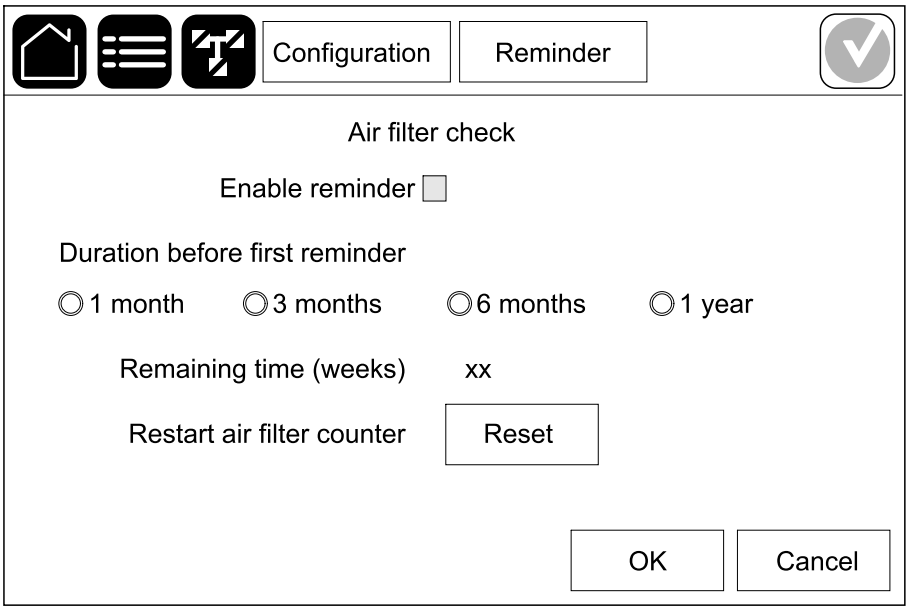

2. Tap **OK** to save your settings.

Operation Procedures

Transfer the UPS from Normal Operation to Static Bypass Operation

1. Select **Control > Operation mode > Transfer to bypass operation**.

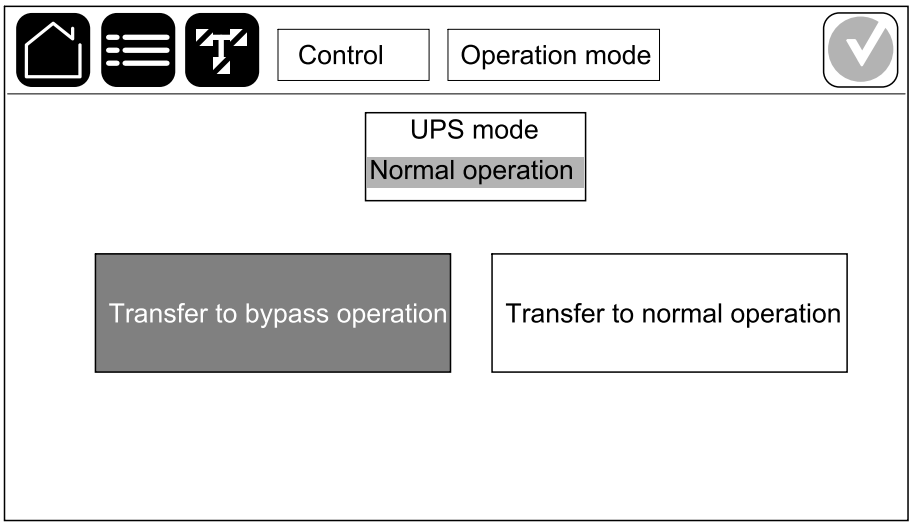

2. Tap **OK** on the confirmation screen.

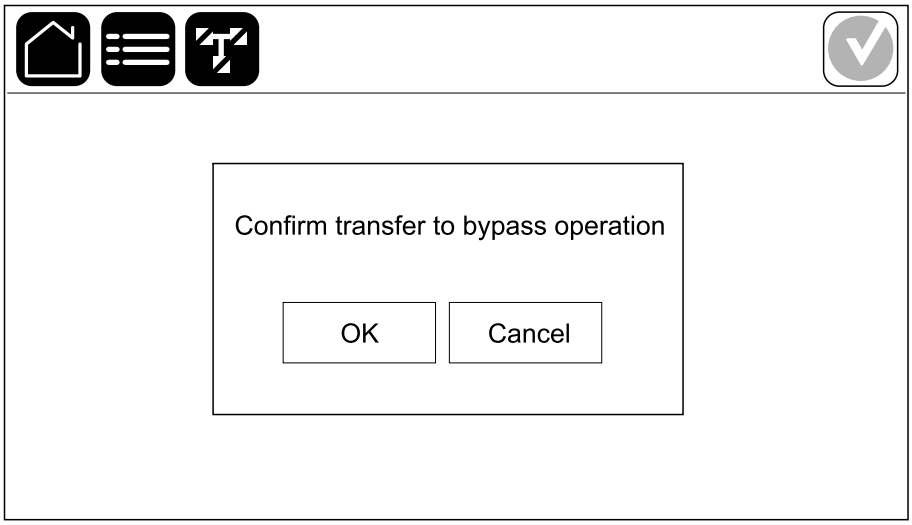

Transfer the UPS from Static Bypass Operation to Normal Operation

1. Select **Control > Operation mode > Transfer to normal operation**.
2. Tap **OK** on the confirmation screen.

Turn the Inverter OFF

IMPORTANT: This will turn off the supply to the load.

1. Select **Control > Inverter > Inverter off**.

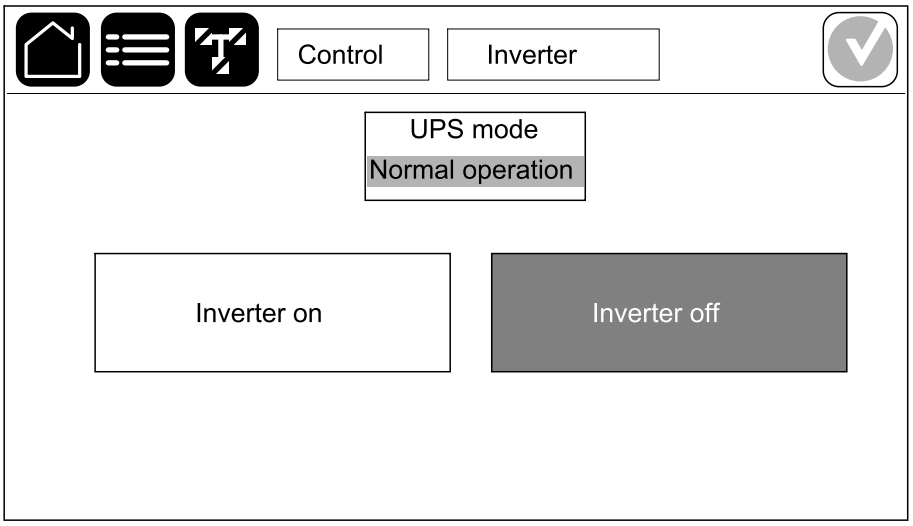

2. Tap **OK** on the confirmation screen.

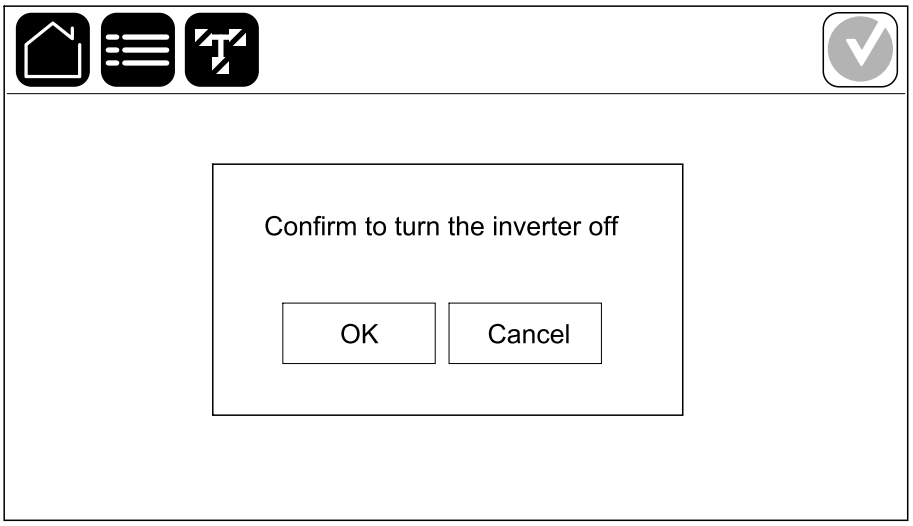

Turn the Inverter ON

1. Select **Control > Inverter > Inverter on**.
2. Tap **OK** on the confirmation screen.

Set the Charger Mode

1. Tap **Control > Charger**.

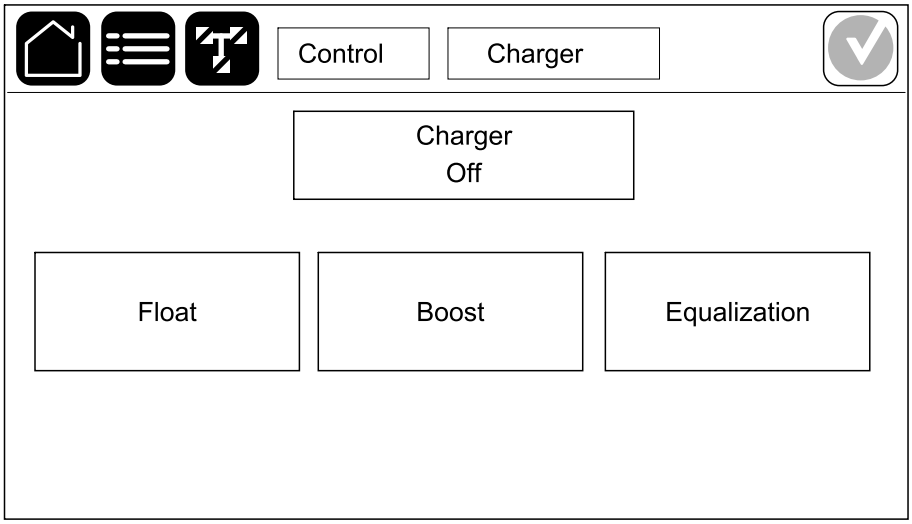

2. Tap **Float**, **Boost**, or **Equalization**.
3. Tap **OK** on the confirmation screen.

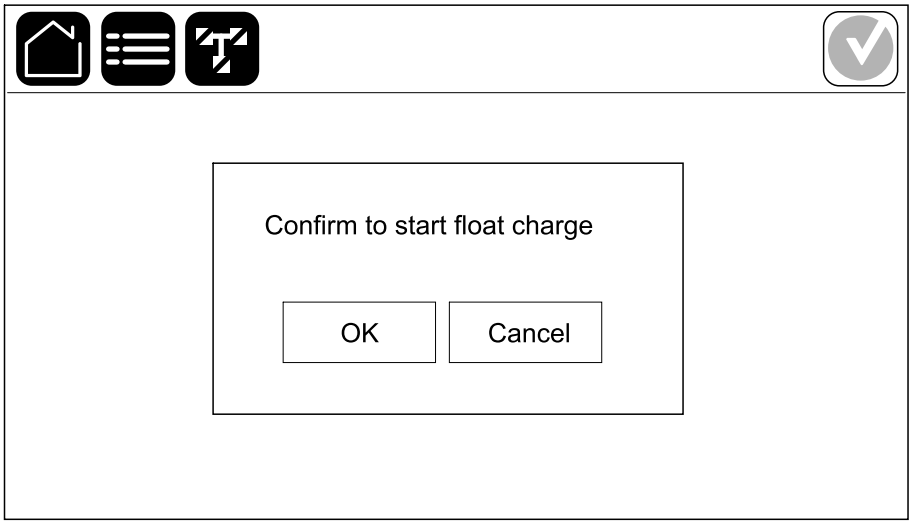

Shut Down the UPS System into Maintenance Bypass Operation

NOTE: Only operate a disconnect device when the associated disconnect device indicator lamp is illuminated.

1. Shut down the UPS system using **Guided sequences**:
   - **For a single UPS system**: Select **Control > Guided sequences > Shut down UPS system** and follow the steps which appear on the display.
   - **For a parallel UPS system**: Select **Control > Guided sequences > Shut down a UPS in a parallel system** and follow the steps which appear on the display.

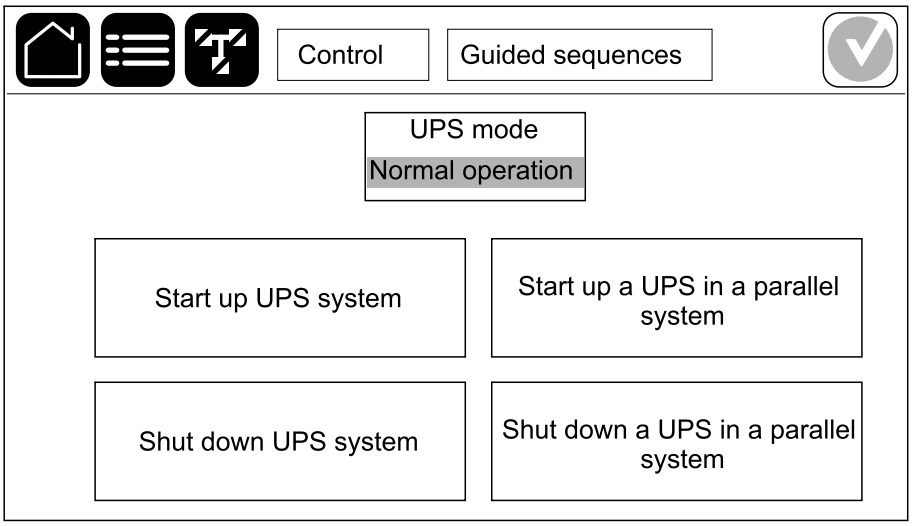

Shut Down into Maintenance Bypass Operation for Single UPS System with Solenoid Key Release Unit (SKRU) Installed

NOTE: Only operate a disconnect device when the associated disconnect device indicator lamp is illuminated.

NOTE: This is a generic procedure, always follow the specific instructions given with your solenoid key release unit (SKRU) system.

1. Select **Control > Operation mode > Transfer to bypass operation**.
2. Hold down the SKRU push-button, turn and remove key A from the SKRU interlock.
3. Insert key A in the interlock for the maintenance bypass disconnect device MBB and turn the key.
4. Close the maintenance bypass disconnect device MBB.
5. Open the unit output disconnect device UOB.
6. Turn and remove key B from the interlock for the unit output disconnect device UOB.
7. Insert key B in the SKRU interlock and turn the key to the locked position.
8. Select **Control > Inverter > Inverter off**.
9. Open the static switch input disconnect device SSIB (if present).
10. Open the battery disconnect device(s).
11. Open the unit input disconnect device UIB.

Isolate a Single UPS in the Parallel System

Use this procedure to shut down one UPS in a running parallel system.

NOTE: Ensure that the remaining UPSs can supply the load before starting this procedure.

NOTE: Only operate a disconnect device when the associated disconnect device indicator lamp is illuminated.

1. On this UPS, tap **Control > Guided sequences > Shut down a UPS in a parallel system**, and follow the steps which appear on the display.

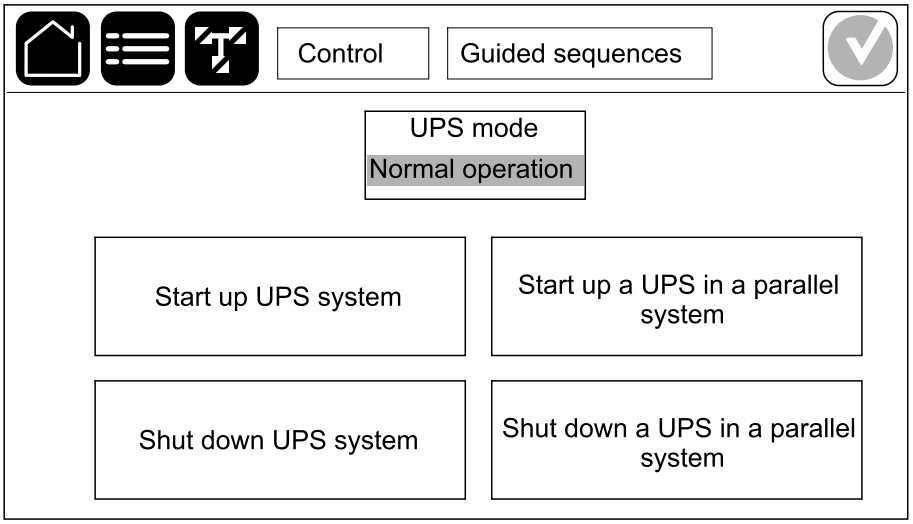

2. **Generic shutdown procedure**:

   NOTE: The following are generic shutdown procedures. Always follow the steps of the **Guided sequences** which are specific to your system

   a. On this UPS, select **Control > Inverter > Inverter off** or press and hold the inverter OFF button on the system level controller for 5 seconds.

   b. Open the unit output disconnect device UOB for this UPS.

   c. Open the static switch input disconnect device SSIB (if present) for this UPS.

   d. Open the battery disconnect device(s) for this UPS.

   e. Open the unit input disconnect device UIB for this UPS.

Start Up the UPS System from Maintenance Bypass Operation

NOTE: Only operate a disconnect device when the associated disconnect device indicator lamp is illuminated.

1. If open, close the unit input disconnect device UIB.

   The display turns on. The rebooting sequence lasts approximately 3 minutes.

2. Start up the UPS system using **Guided sequences**:
   - **For a single UPS system**: Select **Control > Guided sequences > Start up UPS system** and follow the steps which appear on the display.
   - **For a parallel UPS system**: Select **Control > Guided sequences > Start up a UPS in a parallel system** and follow the steps which appear on the display.

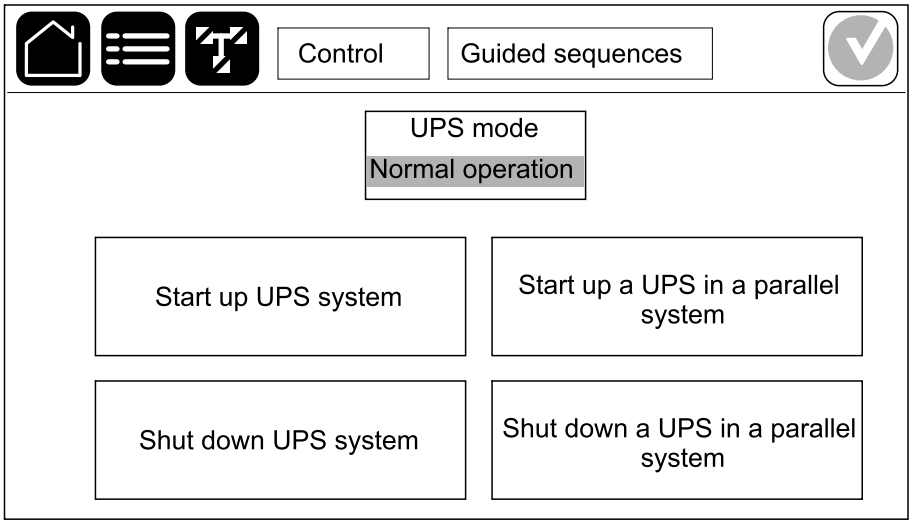

Start Up from Maintenance Bypass Operation for Single UPS System with Solenoid Key Release Unit (SKRU) Installed

NOTE: Only operate a disconnect device when the associated disconnect device indicator lamp is illuminated.

NOTE: This is a generic procedure, always follow the specific instructions given with your solenoid key release unit (SKRU) system.

1. Close the unit input disconnect device UIB.

   The display turns on. The rebooting sequence lasts approximately three minutes.
2. Close the static switch input disconnect device SSIB (if present).
3. Close the bypass backfeed disconnect device BF2 (if present).
4. Close the battery disconnect devices.
5. Select **Control > Operation mode > Transfer to bypass operation**.
6. Hold down the SKRU push-button, turn and remove key B from the SKRU interlock.
7. Insert key B in the interlock for the unit output disconnect device UOB and turn the key.
8. Close the unit output disconnect device UOB.
9. Open the maintenance bypass disconnect device MBB.
10. Turn and remove key A from the interlock for the maintenance bypass disconnect device MBB.
11. Insert key A in the SKRU interlock and turn the key to the locked position.
12. Select **Control > Inverter > Inverter on**.

Start Up and Add a UPS to a Running Parallel System

Use this procedure to start up a UPS and add it to a running parallel system.

NOTE: Only operate a disconnect device when the associated disconnect device indicator lamp is illuminated.

1. Close the unit input disconnect device UIB for this UPS (if open).

   The display turns on. The rebooting sequence lasts approximately 3 minutes.

2. Select **Control > Guided sequences > Start up a UPS in a parallel system**, and follow the steps which appear on the display.

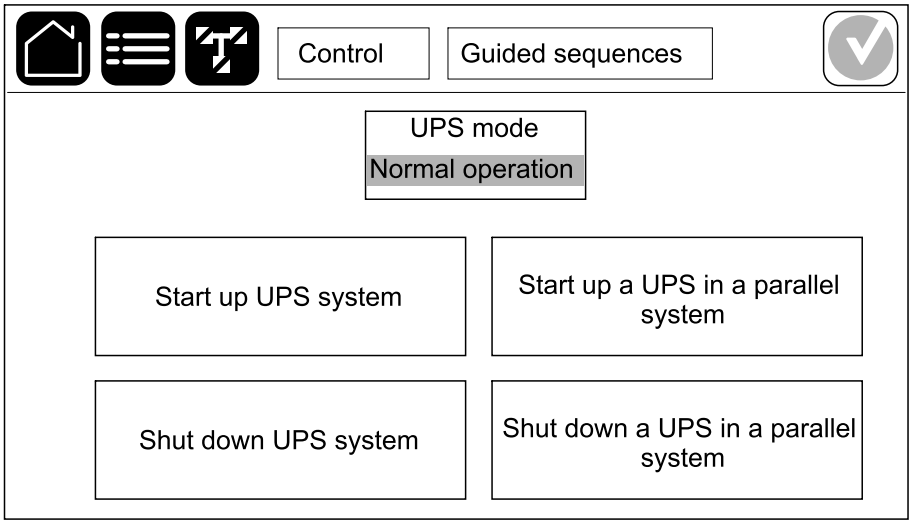

3. **Generic start-up procedure**:

   NOTE: The following are generic start-up procedures. Always follow the steps of the **Guided sequences** which are specific to your system

   a. Close the static switch input disconnect device SSIB (if present) for this UPS.

   b. Close the bypass backfeed disconnect device BF2 (if present) for this UPS.

   c. Close the battery disconnect device(s) for this UPS.

   d. Close the unit output disconnect device UOB for this UPS.

   e. On this UPS, select **Control > Inverter > Inverter on** or press and hold the inverter ON button on the system level controller for 5 seconds.

Access a Configured Network Management Interface

The network management card web interface is compatible with:
Windows® operating systems:

- Microsoft® Internet Explorer® (IE) 10.x or higher, with compatibility view turned on.
- The latest release of Microsoft® Edge®.

All operating systems:

- The latest releases of Mozilla® Firefox® or Google® Chrome®.

The below procedure describes how to access the network management interface from a web interface. If enabled, it is also possible to use the following interfaces:

- SSH
- SNMP
- FTP
- SFTP

NOTE: Please visit www.schneider-electric.com to view the Security Deployment Guidelines and Security Handbook for the product.

The network management card supports NTP connection for synchronization of time. Ensure that only one network management interface in the entire UPS system (single or parallel) is set to synchronize time.

You can use either of the following protocols when you use the web interface:

- The HTTP protocol (disabled by default), which provides authentication by user name and Pin but no encryption.
- The HTTPS protocol (enabled by default), which provides extra security through Secure Socket Layer (SSL); encrypts user names, Pin, and data being transmitted; and authenticates network management cards by means of digital certificates.

See Enable HTTP/HTTPS Protocols, page 63.

By default, SNMP protocols are disabled on the network management card to avoid cybersecurity risks. SNMP protocols must be enabled to use the monitoring functions of the network management card, or to connect to EcoStruxure IT Gateway or StruxureWare Data Center Expert. You can enable and use either of these SNMP protocols:

- SNMPv1, which provides minimal security. If using this protocol, Schneider Electric recommends customizing the access control parameters to enhance security.
- SNMPv3, which provides extra security through both encryption and authentication. Schneider Electric recommends using this protocol for better security and customizing the access control parameters.

See Enable SNMP Protocols, page 64.

Enable HTTP/HTTPS Protocols

1. Access the network management interface by its IP address (or its DNS name, if a DNS name is configured).
2. Enter the user name and password. The default user name and password is **apc**. You will be prompted to change this password on the first login.
3. To enable or disable the HTTP or HTTPS protocol, go to **Configuration > Network > Web > Access**, select the protocol, set the parameters, and click on **Apply**.

Enable SNMP Protocols

1. Access the network management interface by its IP address (or its DNS name, if a DNS name is configured).
2. Enter the user name and password. The default user name and password is **apc**. You will be prompted to change this password on the first login.
3. To enable SNMPv1 protocol:
   a. Go to **Configuration > Network > SNMPv1 > Access**, select **Enable** and click on **Apply**.
   b. Go to **Configuration > Network > SNMPv1 > Access Control** and set up the parameters.
4. To enable SNMPv3 protocol:
   a. Go to **Configuration > Network > SNMPv3 > Access**, select **Enable** and click on **Apply**.
   b. Go to **Configuration > Network > SNMPv3 > Access Control** and set up the parameters.
   c. Go to **Configuration > Network > SNMPv3 > User Profiles** and set up the parameters.

NOTE: The SNMPv1 or SNMPv3 settings must match your settings on the EcoStruxure IT Gateway or StruxureWare Data Center Expert for the network management card 4 to communicate correctly with EcoStruxure IT Gateway or StruxureWare Data Center Expert.

View the Logs

1. Tap **Logs**. The log shows the latest 100 events with the newest events at the top of the list.
   a. Tap the arrow buttons to go to the next or previous page.
   b. Tap the double arrow buttons to go the first or last page.
   c. Tap the recycle bin button to delete all events stored in the log.

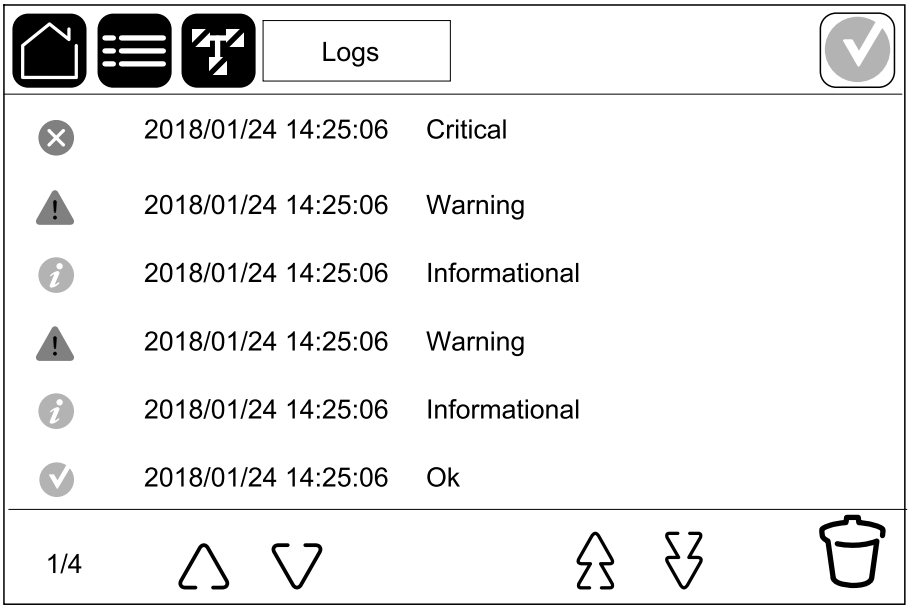

View the System Status Information

1. Tap **Status**.

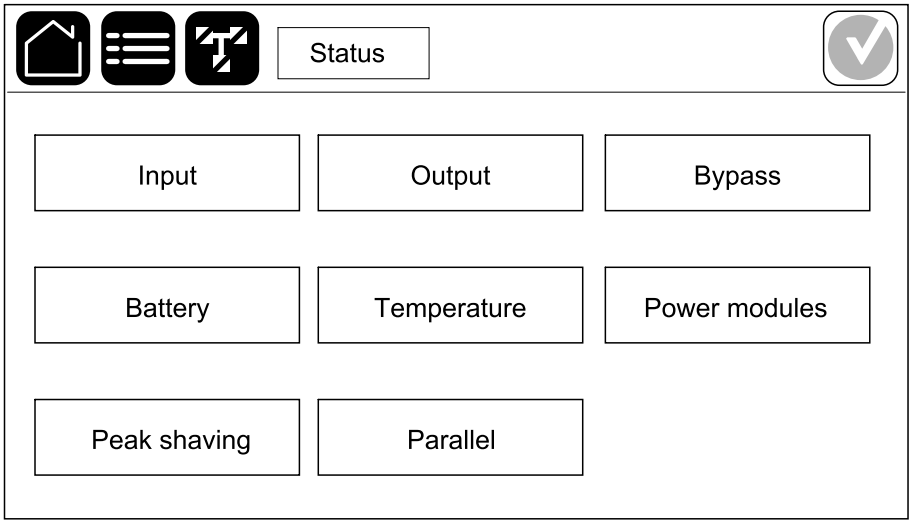

   a. Tap **Input** to see the status.

Input

Voltage ph-ph (phase-to-phase)	The present phase-to-phase input voltage.
Current	The present input current from the AC utility power source per phase in amperes (A).
Frequency	The present input frequency in hertz (Hz).
Voltage ph-N (phase-to-neutral)(13)	The present phase-to-neutral input voltage in volts (V).
Total power	The present total active power input (for all three phases) in kW.
Power	The present active power (or real power) input for each phase in kilowatts (kW). Active power is the portion of power flow that, averaged over a complete cycle of the AC waveform, results in net transfer of energy in one direction.
Peak current	The input peak current in amperes (A).
Power factor	The ratio of the active power to apparent power.
Max. RMS current	The present maximum RMS current.
Energy	The total energy consumption since the time of installation.

   b. Tap **Output** to see the status.

Output

Voltage ph-ph (phase-to-phase)	The phase-to-phase output voltage at the inverter in volts (V).
Current	The present output current for each phase in amperes (A).
Frequency	The present output frequency in hertz (Hz).
Voltage ph-N (phase-to-neutral)(13)	The phase-to-neutral output voltage at the inverter in volts (V).
Load	The percentage of the UPS capacity presently used across all phases. The load percentage for the highest phase load is displayed.
Neutral current(13)	The present output neutral current in amperes (A).

(13) Only applicable in systems with neutral connection.

Output (Continued)

Total power	The present active total output power (for all three phases) in kilowatts (kW).
Power	The present active power (or real power) output for each phase in kilowatts (kW). Active power is the portion of power flow that, averaged over a complete cycle of the AC waveform, results in net transfer of energy in one direction.
Peak current	The output peak current in amperes (A).
Power factor	The present output power factor for each phase. Power factor is the ratio of active power to apparent power.
Max. RMS current	The present maximum RMS current.
Energy	The total energy supplied since the time of installation.
Crest factor	The present output crest factor for each phase. The output crest factor is the ratio of the peak value of the output current to the RMS (root mean square) value.

c. Tap **Bypass** to see the status.

Bypass

Voltage ph-ph (phase-to-phase)	The present phase-to-phase bypass voltage (V).
Current	The present bypass current for each phase, in amperes (A).
Frequency	The present bypass frequency in hertz (Hz).
Voltage ph-N (phase-to-neutral)(14)	The present phase-to-neutral bypass voltage (V).
Total power	The present total active bypass power (for all three phases) in kilowatts (kW).
Power	The present active power (or real power) bypass for each phase in kilowatts (kW). Active power is the portion of power flow that, averaged over a complete cycle of the AC waveform, results in net transfer of energy in one direction.
Peak current	The bypass peak current in amperes (A).
Power factor	The present bypass power factor for each phase. Power factor is the ratio of active power to apparent power.
Max. RMS current	The present maximum RMS current.

d. Tap **Battery** to see the status.

Battery

Measurements	The present DC power being drawn from the battery, in kilowatts (kW).
	The present battery voltage (VDC).
	The present battery current in amperes (A). A positive current indicates that the battery is charging; a negative current indicates that the battery is discharging.
	Battery temperature from the connected temperature sensors in Celsius or Fahrenheit.
Battery	The amount of time before the batteries reach the low-voltage shutdown level. Also shows charge level of the battery as a percentage of full charge capacity.

(14) Only applicable in systems with neutral connection.

Battery (Continued)

	The present battery charge (Ah).
Configuration	Shows battery type.
Status	The general condition of the charger.
Mode	The operation mode of the charger (**Off**, **Float**, **Boost**, **Equalization**, **Cyclic**, **Test**).
Charging capacity	The maximum charge capacity in percentage of the UPS nominal power rating.

e. Tap **Temperature** to see the status.

Temperature

UPS	**Ambient temperature**	Ambient temperature in Celsius or Fahrenheit.
	Battery temperature	Battery temperature in Celsius or Fahrenheit from the connected battery temperature sensors.
	Humidity	Relative humidity of the installed power modules based on integrated sensor inside the UPS.
External sensors. Naming is set up via the network management interface.	**Temperature**	Ambient temperature in Celsius or Fahrenheit from the optional connected temperature sensors (AP9335T and AP9335TH).
	Humidity	Humidity in percentage from the optional connected humidity sensors (AP9335TH).

f. Tap on **Power modules** to see the status. The view will show presence and status symbol for each power module.

Power modules

Power module presence	**Power module status symbol (gray in illustration)**	
Black lines: Power module PMx is present		Green: No alarms present for the power module.
Gray lines: Power module PMx is not present		Blue: Informational alarm(s) present for the power module. Tap the alarm status symbol in the top right corner of the screen to open the active alarms log.
		Yellow: Warning alarm(s) present for the power module. Tap the alarm status symbol in the top right corner of the screen to open the active alarms log.
		Red: Critical alarm(s) present for the power module. Tap the alarm status symbol in the top right corner of the screen to open the active alarms log.

g. Tap **Peak shaving** to see the status.

Peak shaving

Peak shaving mode	Shows if peak shaving mode is active or inactive at this moment.
Input power	The present input power used by the UPS.
Battery power	The present battery power used by the UPS.
Charging in peak shaving mode	Shows if battery charging is allowed while the UPS is in active peak shaving mode.
Forced battery operation	Shows if forced battery operation is enabled (green).
State of charge	The present state of charge for the batteries. The state of charge for the batteries must be at a specified level before peak shaving mode is allowed to be active. Peak shaving mode will be deactivated if the state of charge reaches a specified minimum level.
Remaining time: **Battery operation** **Peak shaving mode**	 The remaining time scheduled for battery operation. The remaining time scheduled for active peak shaving mode.

h. Tap **Parallel** to see the status.

Parallel

Input current	The present input current from the input source per phase in amperes (A).
Bypass current	The present bypass current from the bypass source per phase in amperes (A).
Total output power	The total output power of the parallel UPS system showing the total load percentage and the total output power in kW and kVA for the parallel system.
Output current	The present output current for each phase in amperes (A).
Number of redundant UPSs	The number of redundant UPSs present.
Redundancy setting	The configured redundancy setting.

Tests

The UPS system can perform the following tests to ensure correct performance of the system:

- **Buzzer**
- **Status LEDs**
- **Breaker lamp**
- **LED strip**
- **Battery**, see Start a Battery Test, page 72 for details and requirements for this test.
- **Runtime calibration**, see Start a Runtime Calibration Test, page 71 for details and requirements for this test.
- **Battery SPoT mode**, see Perform a Battery SPoT Mode Test in a Single UPS System, page 73 for details and requirements for this test.

1. Tap **Maintenance**. Then tap the button of the function to start the test of the function.

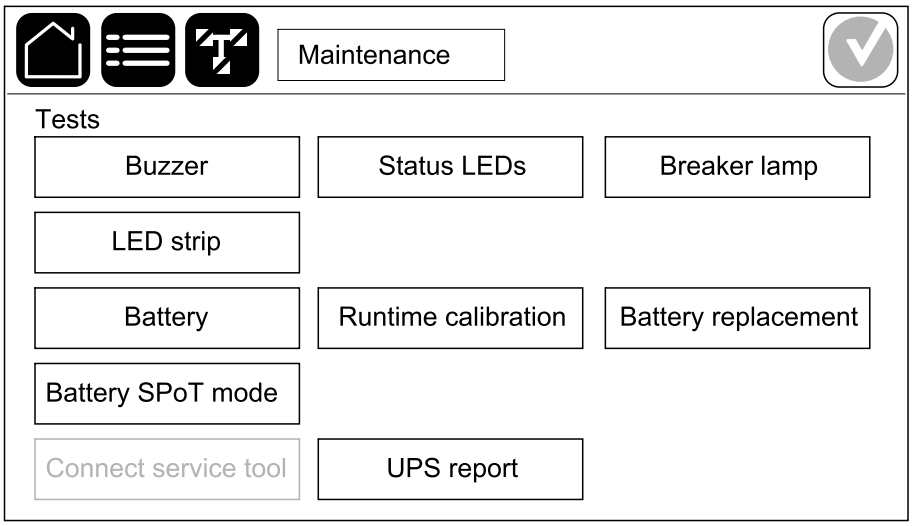

Start a Runtime Calibration Test

This feature is used for calibrating the estimated remaining battery runtime value. In this test, the UPS transfers to battery operation and the batteries are discharged to the low DC warning level. Based on the elapsed time and information about the load, the battery capacity can be calculated and the estimated runtime calibrated.

Schneider Electric recommends performing a runtime calibration test at start-up, when batteries are replaced, or when changes are made to the battery solution.

NOTICE

RISK OF EQUIPMENT DAMAGE

- During a runtime calibration test, the batteries are reduced to a very low capacity and are therefore not capable of supporting the load in case of an input power failure.
- Batteries will be discharged to the low DC warning level and this will result in a short battery runtime after the calibration until the batteries are fully recharged.
- Repeated battery testing or calibration can affect the service life of the battery.

Failure to follow these instructions can result in equipment damage.

Prerequisites:

- No critical alarms present.
- Batteries must be 100% charged.
- The load percentage must be at least 10% and must not change more than 20% during the test. Example: If the load percentage is 30% at the start of the test, the test will abort if the load percentage drops below 24% or rises above 36% during the test.
- The bypass supply must be available.
- The operation mode must be normal operation, eConversion, or ECO mode.
- The system operation mode must be inverter, eConversion, or ECO mode.

1. Tap the menu button on the home screen.
2. Select **Maintenance > Runtime calibration > Start calibration**.
3. Tap **OK** on the confirmation screen.

Stop a Runtime Calibration Test

1. Tap the menu button on the home screen.
2. Select **Maintenance > Runtime calibration > Stop calibration**.
3. Tap **OK** on the confirmation screen.

Start a Battery Test

Prerequisites:

- The battery disconnect devices are closed.
- No critical alarms present.
- The bypass supply must be available.
- Static bypass operation must be available.
- The batteries must be more than 50% charged.
- The runtime available must be more than 4 minutes.
- The operation mode must be normal operation, eConversion, or ECO mode.
- The system operation mode must be inverter, eConversion, or ECO mode.

This feature performs a number of tests on the batteries, such as fuse-blown check and weak battery detection. There are two types of battery tests (by capacity or by voltage/time) which are set up during battery configuration. See for details. The battery test by capacity can be scheduled to run automatically in different time intervals (from weekly and up to once a year).

1. Select **Maintenance > Battery > Start test**.
2. Tap **OK** on the confirmation screen.

Stop a Battery Test

1. Tap the menu button on the home screen.
2. Select **Maintenance > Battery > Stop test**.
3. Tap **OK** on the confirmation screen.

Perform a Battery SPoT Mode Test in a Single UPS System

NOTICE

RISK OF LOAD DROP

The load is not supported by the UPS during a **Battery SPoT mode** test. Shut down any connected load or ensure alternative supply for the load before starting a **Battery SPoT mode** test.

Failure to follow these instructions can result in equipment damage.

NOTICE

RISK OF EQUIPMENT DAMAGE

- Batteries will be discharged to the low DC warning level and this will result in a short battery runtime after the test until the batteries are fully recharged.
- Repeated battery testing or calibration can affect the service life of the battery.

Failure to follow these instructions can result in equipment damage.

NOTE: The **Battery SPoT mode** test is only legally allowed to perform in some countries/areas. Please refer to local/national legislation. **Battery SPoT mode** must be enabled by Schneider Electric services during start-up.

General prerequisites for single UPS system (always refer to the prerequisites listed on your UPS as they are specific to your system):

- UOB must be open.
- The UPS operation mode must be **Requested static bypass**.
- The battery disconnect device(s) BB must be closed.
- There must be no detected surveillance faults.
- SSIB must be closed.
- UIB must be closed (if present).
- BF2 must be closed (if present).
- The output voltage and frequency must be within predefined limits.

This feature performs a battery discharge test without the need for a load bank. During the battery SPoT mode test, the inverter is turned ON while the UPS is in requested static bypass. During the test, the UPS performs a battery runtime calibration test (if the battery runtime test prerequisites are met, see Start a Runtime Calibration Test, page 71) and adjusts the estimated runtime accordingly.

The output power can be manually adjusted from 10 to 100% load to be as close as possible to the operating conditions.

The test stops when the battery voltage has reached its shutdown level, or when the predefined discharge level has been reached.

NOTE: Battery SPoT mode must be enabled by Schneider Electric during service configuration before this test is available.

1. From the home screen on the display, select **Tests > Battery SPoT mode**.
2. On page 1 of the menu for **Battery SPoT mode**, verify that the prerequisites for performing a test is met and confirm that the load is powered if UOB is open during this procedure. Tap the arrow symbol to go to the next page.
3. On page 2, follow the listed checklist. Tap the arrow symbol to go to the next page.

4. On page 3, set the battery discharge level and the output power level. Tap the arrow symbol to go to the next page.

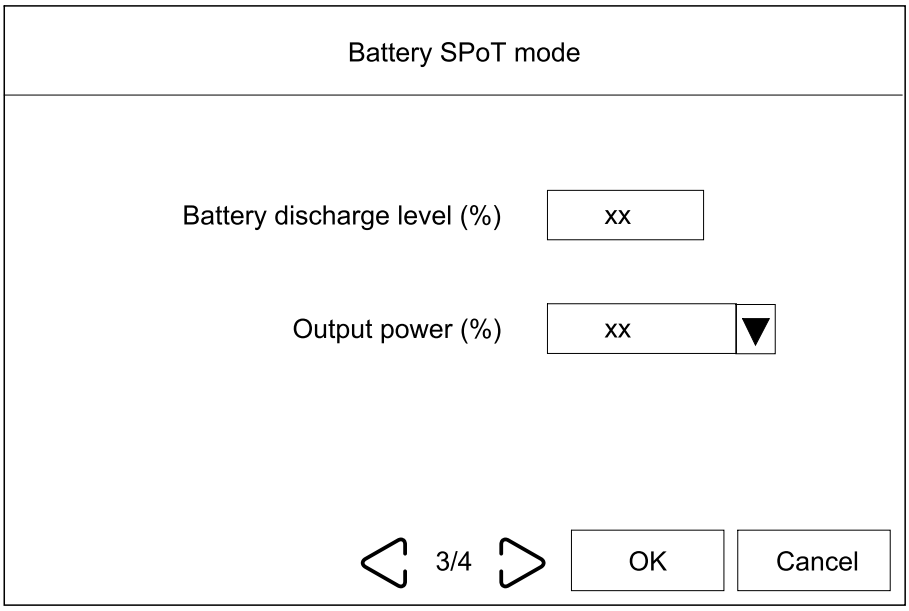

5. On page 4, tap **Start battery SPoT mode** to start the test.

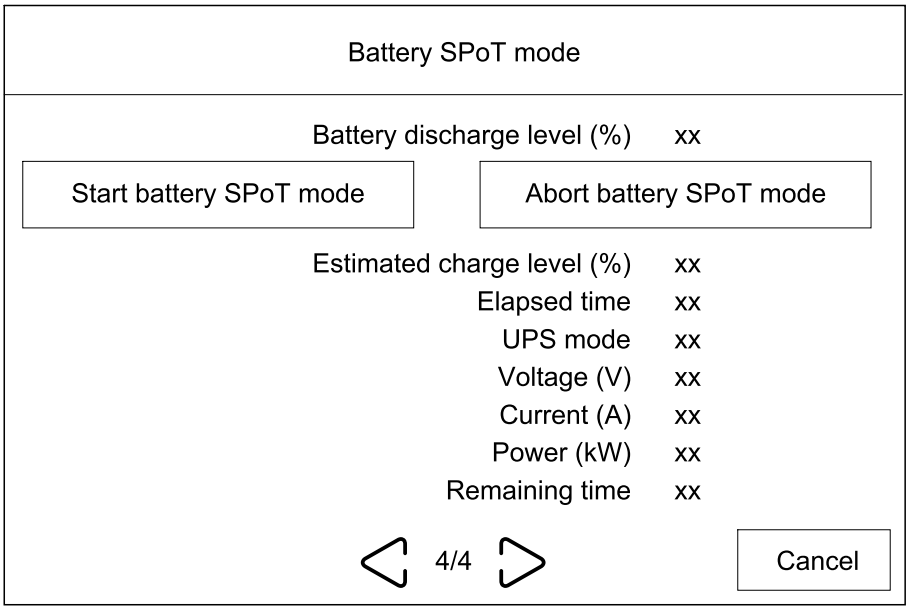

NOTE: If you wish to manually stop the test, tap **Abort battery SPoT mode** .

Maintenance

Recommended Personal Protective Equipment (PPE)

For all procedures where the outermost front door on the unit is opened, Schneider Electric recommends the following personal protective equipment (PPE) as a minimum:

- Non-flammable cotton clothing
- Eye protection (e.g. glasses or goggles)
- Safety shoes
- Any personal protective equipment required or recommended by local or national regulation

⚠CAUTION

RISK OF PERSONAL INJURY

Always perform a risk assessment before operating or maintaining this equipment. Use appropriate personal protection equipment.

Failure to follow these instructions can result in injury or equipment damage.

Connect Temperature/Humidity Sensor (Option)

Temperature/humidity sensor (AP9335T or AP9335TH) can be connected to the network management card.

1. Connect the temperature/humidity sensor to the universal I/O port of the network management card.
2. Set up the temperature/humidity sensor via the network management interface, see Access a Configured Network Management Interface, page 63.
3. To see the temperature/humidity measurements, tap **Status > Temperature**.

Replace the Air Filters (GVXLOPT007)

1. Open the front doors.
2. Remove the brackets.

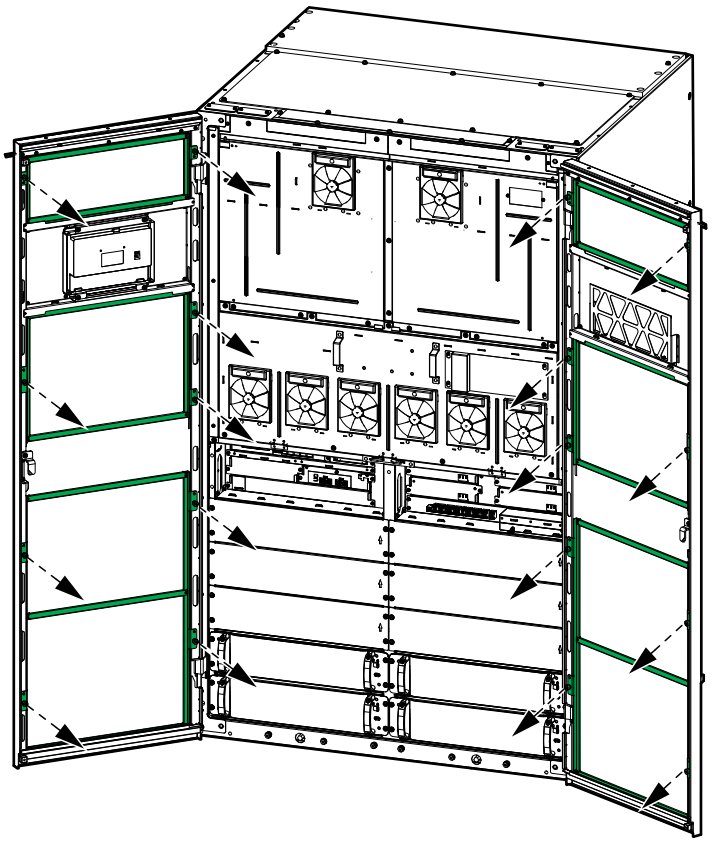

3. Remove the old air filters and install the new air filters.

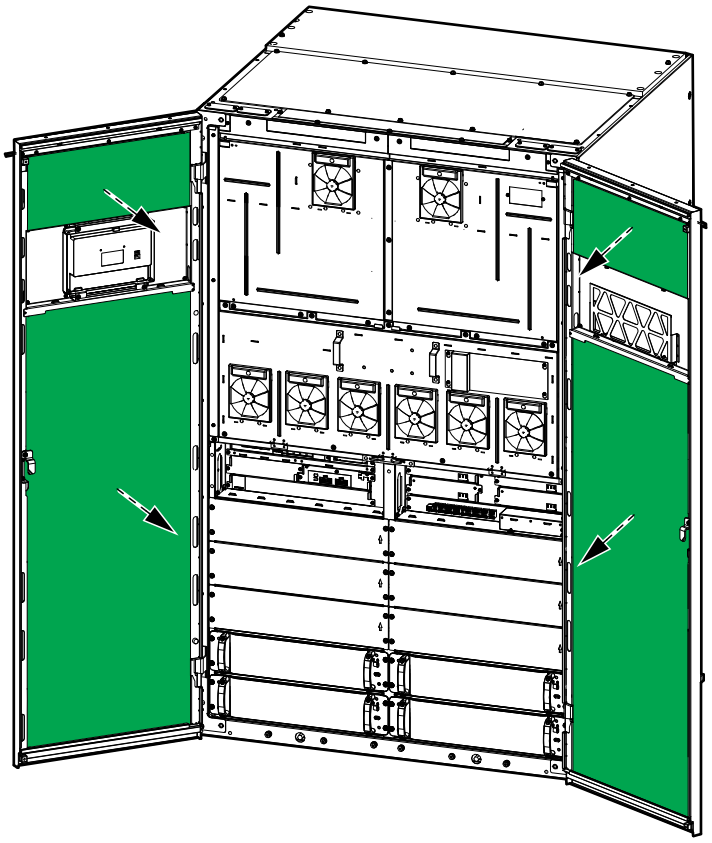

4. Reinstall the brackets.
5. Close the front doors.

6. Reset the air filter counter, see Configure the Air Filter Reminder, page 53.

Live Swap: Add, Remove, or Replace a Power Module

NOTE: This UPS has been designed and evaluated for power module insertion and removal in any operation mode: **Live Swap**. This page specifies manufacturer's instructions for how to perform **Live Swap**.

NOTE: Incident energy is <1.2 cal/cm^2 when installed and first startup commissioned in accordance with product instructions. Incident energy is measured 200 mm from cabinet front.

DISCLAIMER:

- Electrical equipment should be installed, operated, serviced, maintained, replaced, or have similar work carried out on it only by suitably qualified, trained, experienced, and competent personnel who hold any necessary authorizations (e.g. licenses, permits or certifications) to perform such work. All work must be carried out in a way that does not give rise to danger and using appropriate personal protective equipment (PPE).
- User must ensure compliance with the manufacturer's instructions and user manual and with all applicable laws, regulations, standards, and guidance when using this equipment and carrying out work or permitting work to be carried out on or near electrical equipment.
- Neither Schneider Electric nor any of its affiliates shall be liable for any claims, costs, losses, damages, death, or injuries arising out of the improper use of this equipment or any failure to comply with any of the above requirements.

⚠⚠DANGER

HAZARD OF ELECTRIC SHOCK, EXPLOSION, OR ARC FLASH

- Verify that the UPS has the **Live Swap** label present.
- If no **Live Swap** label is present on the UPS, then the UPS must be transferred to maintenance bypass operation or turned off before a power module can be inserted or removed.
- Apply appropriate personal protective equipment (PPE) and follow safe electrical work practices.
- Insertion or removal of power modules must only be performed by qualified personnel knowledgeable of electrical work and the required precautions. Keep unqualified personnel away.
- This procedure requires opening the front door. All other doors and covers must remain closed and secured during this procedure.
- Verify that the UPS is secured against movement before performing this procedure.
- If evidence of poor maintenance or poor installation is observed, do not proceed with this procedure.
- Do not install power modules which have been accidentally dropped, broken, flooded, contaminated, infested, or damaged in any way.
- Do not install power modules which are of unknown operational state.
- Keep a minimum distance of 200 mm from the cabinet front while the system is energized.
- Do not use any tools inside the empty power module slot.
- Do not reach into the empty power module slot.

Failure to follow these instructions will result in death or serious injury.

⚠WARNING

RISK OF EQUIPMENT DAMAGE

- Store the power modules at an ambient temperature of -25 to 55 °C, 0-95% non-condensing humidity.
- Store the power modules in their original protective packaging.

Failure to follow these instructions can result in death, serious injury, or equipment damage.

⚠WARNING

HEAVY LOAD

Power modules are heavy (54 kg). Use appropriate lifting equipment and trained personnel to lift and handle the power module. It is recommended to use a scissor lifting cart or similar appropriate lifting equipment as shown in this procedure. See the specifications for the recommended scissor lifting cart below. If no lifting equipment is available, three persons are required to lift and handle the power module.

Failure to follow these instructions can result in death, serious injury, or equipment damage.

⚠WARNING

HAZARD OF INJURY

Never stack the power modules on top of each other.

Failure to follow these instructions can result in death, serious injury, or equipment damage.

⚠CAUTION

HEAVY LOAD AND POTENTIALLY HOT SURFACE

Use protective gloves and safety shoes when handling the power modules.

Failure to follow these instructions can result in injury or equipment damage.

NOTICE

RISK OF INSTALLATION OVERLOAD

Check and verify that the installation is correctly sized for the increase in power rating before installing more power modules in the UPS. Incorrect sizing of the installation can result in an installation overload. See the installation manual for requirements for upstream and downstream protection, cable sizes, etc.

Failure to follow these instructions can result in equipment damage.

NOTICE

RISK OF LOAD DROP

Check and verify that the remaining power modules can support the load before removing a power module from the UPS.

Failure to follow these instructions can result in equipment damage.

NOTE: The power module slots must always be filled from lowest to highest position number. When adding extra power modules, install in the lowest free position number. When reducing the number of power modules, remove from the highest occupied position number.

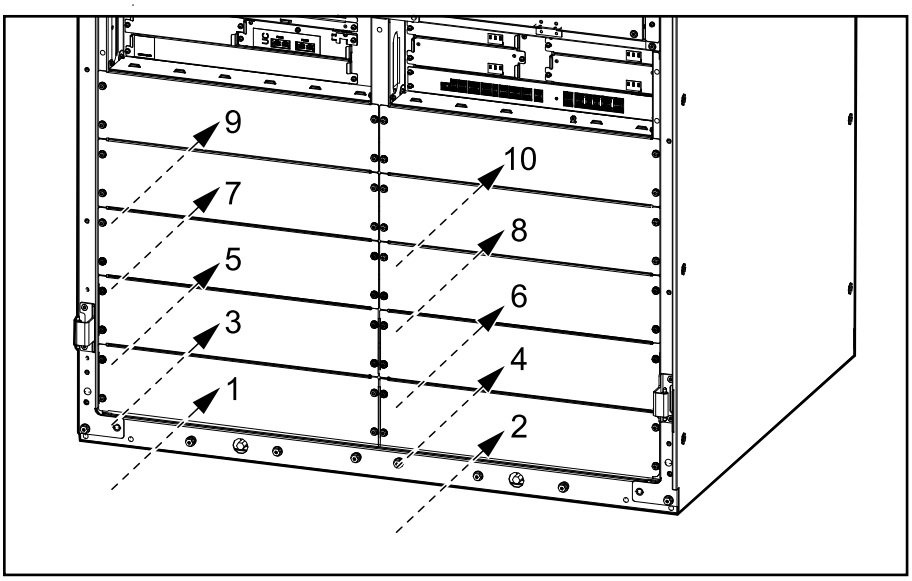

Specifications for Recommended Scissor Lifting Cart

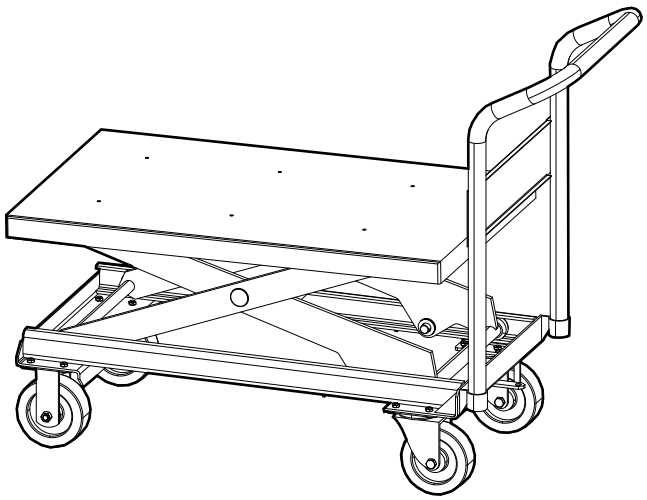	Lifting weight capacity: Minimum 80 kg Lifting height range (lowest power module position to highest power module position): 100 mm to 650 mm Table size: Minimum 700 mm x 450 mm Material: Steel frame with solid wheels with brakes CE/GS approved

1. Remove an installed power module:

   a. Set the enable switch to the OFF (unlocked) position. Remove the four screws from the power module and save the screws.

      NOTE: The power module controller is operating and the LED on the front of the power module is flashing while the power module is still inserted in the UPS. But the power module does not supply power while the enable switch is in the OFF (unlocked) position.

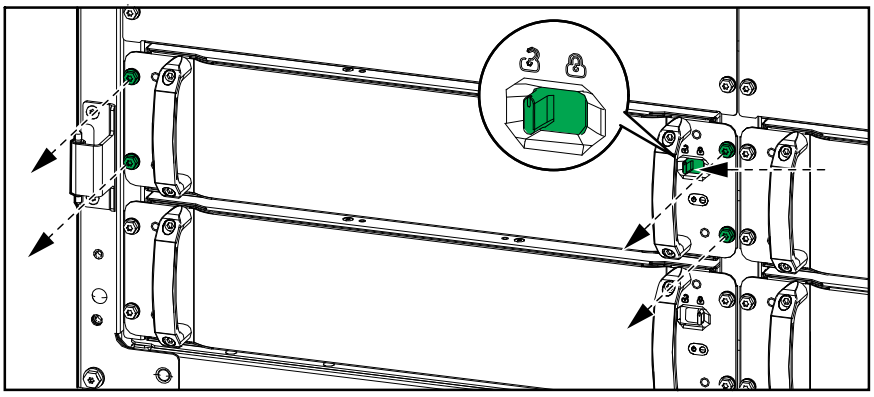

   b. Use the provided power module tool(15) to pull the power module out from the power module slot. Place the power module tool as shown.

Power Module Tool – Power Module Next to Filler Plate

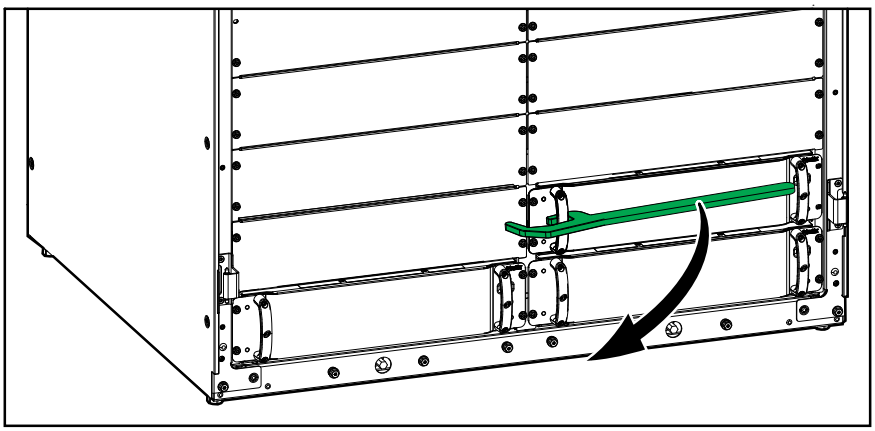

Power Module Tool – Power Module Next to Empty Slot

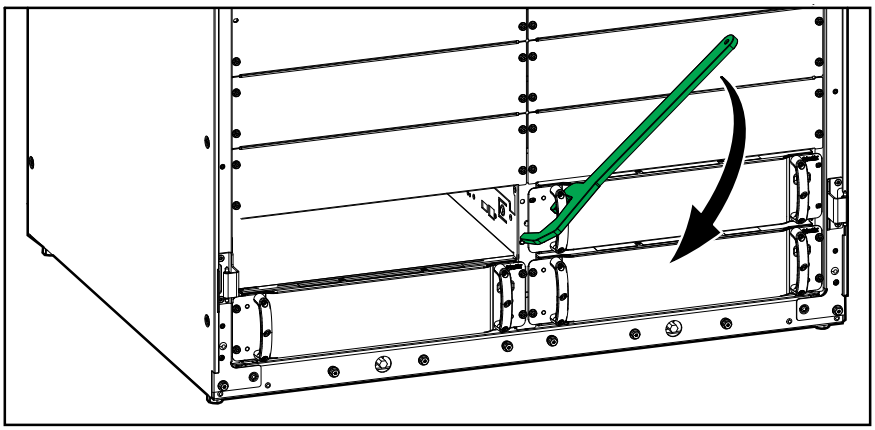

(15) The power module tool is stored in the document compartment in the UPS front door.

Power Module Tool – Power Module Next to Power Module

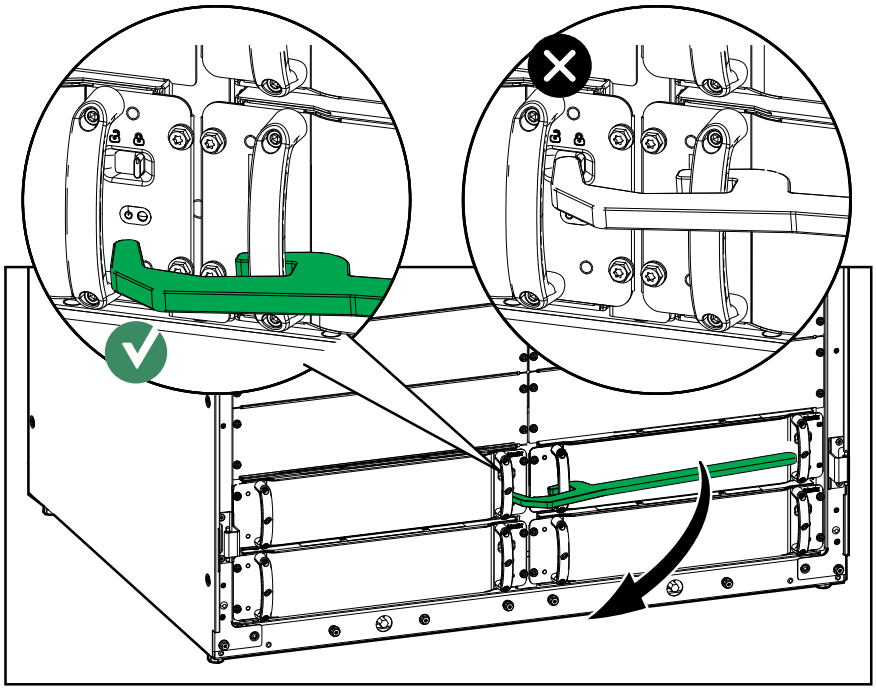

c. Pull the power module halfway out. A locking mechanism prevents the power module from being pulled all the way out.

   NOTE: The power module fans may speed up shortly when the power module is pulled out.

d. Release the lock by pressing the release button in the right side of the power module and pull the power module out onto an appropriate scissor lifting cart.

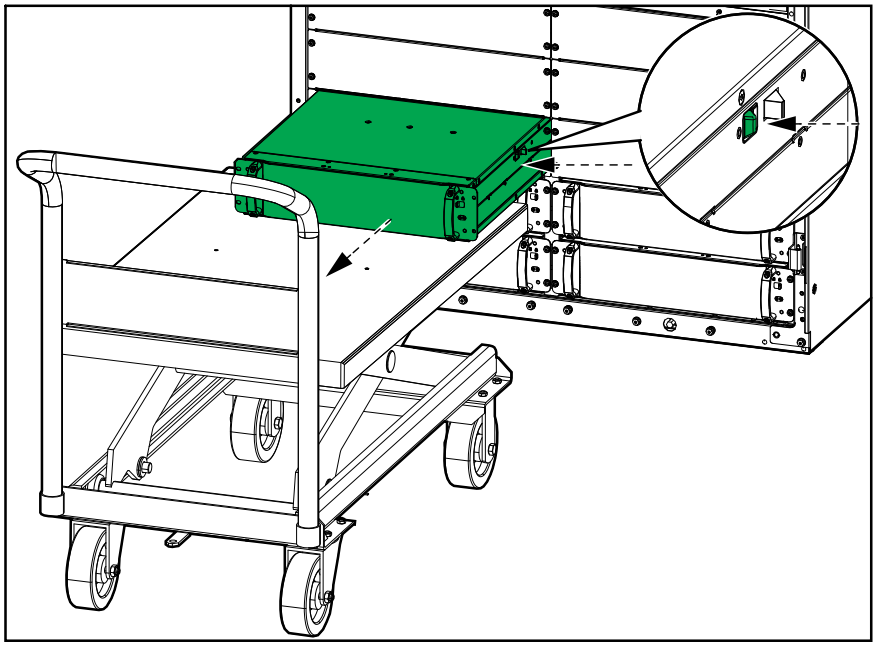

e. If no replacement power module will be installed: Install a filler plate in front of the empty power module slot. Reuse the screws from the old power module.

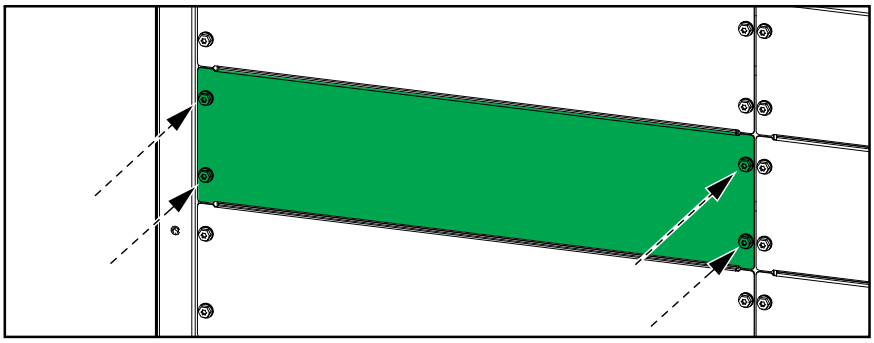

2. Install a new power module:

   a. If present, remove the filler plate from the empty power module slot. Save the filler plate for future use and save the screws.

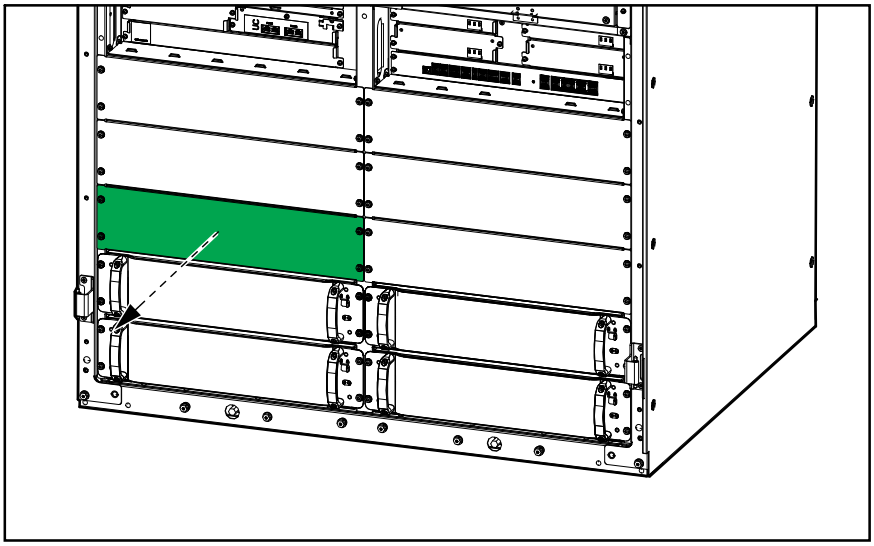

   b. Use an appropriate lifting cart to lift the power module to the correct height and push the power module into the power module slot.

      NOTE: The power module controller will start operating and the LED on the front of the power module starts flashing when the power module is inserted in the UPS. But the power module does not supply power while the enable switch is in the OFF (unlocked position).

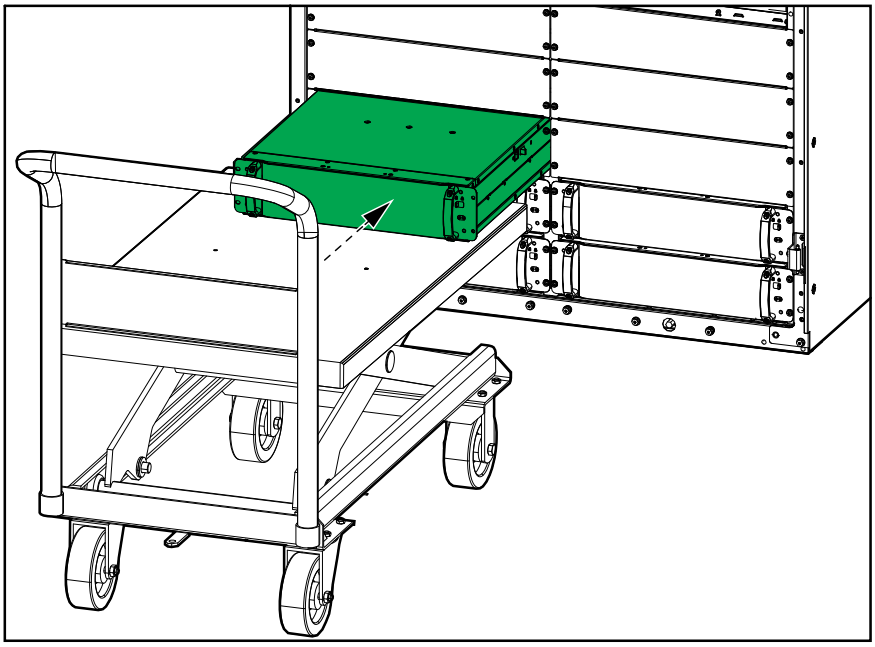

   c. Install the four screws in the left and right sides of the power module. Reuse the screws from the filler plate/old power module.

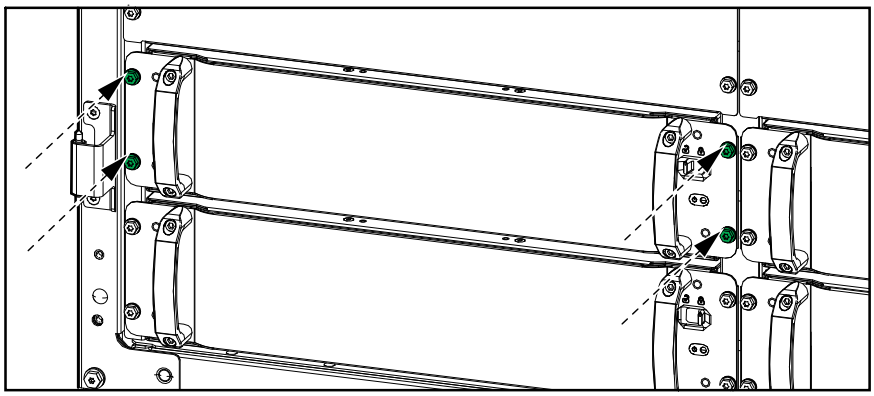

d. Set the enable switch on the power module to the ON (locked) position.

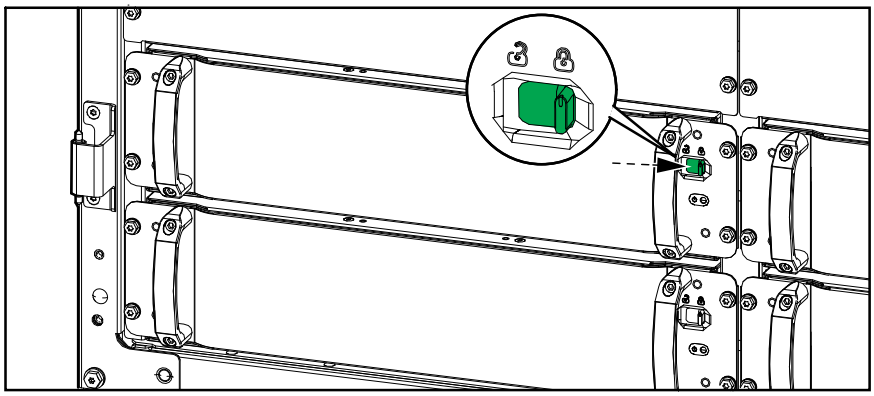

The power module will perform a self-test, automatically upgrade the firmware according to the system, and then go online. The UPS operation mode shown on the display will briefly change to **Battery operation** during the self-test and then return to the previous operation mode.

⚠⚠DANGER

HAZARD OF ELECTRIC SHOCK, EXPLOSION, OR ARC FLASH

All power module slots must have either a power module or a filler plate installed.

Failure to follow these instructions will result in death or serious injury.

Determine if you need a Replacement Part

To determine if you need a replacement part, contact Schneider Electric and follow the procedure below so that the representative can assist you promptly:

1. In the event of an alarm condition, scroll through the alarm lists, record the information, and provide it to the representative.
2. Write down the serial number of the unit so that you will have it easily accessible when you contact Schneider Electric.
3. If possible, call Schneider Electric from a telephone that is within reach of the display so that you can gather and report additional information to the representative.
4. Be prepared to provide a detailed description of the problem. A representative will help you solve the problem over the telephone, if possible, or will assign a return material authorization (RMA) number to you. If a module is returned to Schneider Electric, this RMA number must be clearly printed on the outside of the package.
5. If the unit is within the warranty period and has been started up by Schneider Electric, repairs or replacements will be performed free of charge. If it is not within the warranty period, there will be a charge.
6. If the unit is covered by a Schneider Electric service contract, have the contract available to provide information to the representative.

Troubleshooting

LED Strip Lighting per UPS Operation Mode

The LED strip on the top of the front doors can show the UPS status, if enabled.

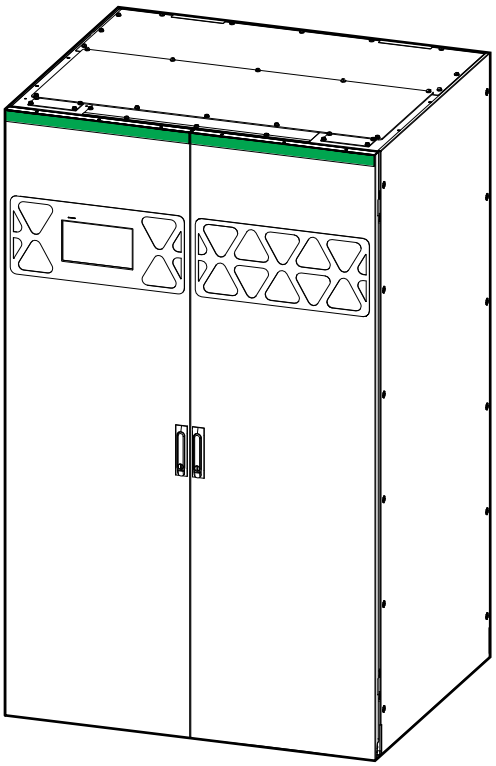

- Green steady light means that no alarms are present for the UPS.
- Yellow flashing light means that warning alarms are present.
- Red flashing light means that critical alarms are present.

Status LED Lighting per UPS Operation Mode

If the display becomes inoperable, you can see the UPS operation mode via the status LEDs on the system level controller.

- Green LED means function is active.
- Off LED means function is inactive.
- Red LED (gray in illustration) means function is inoperable or function is in alarm condition.

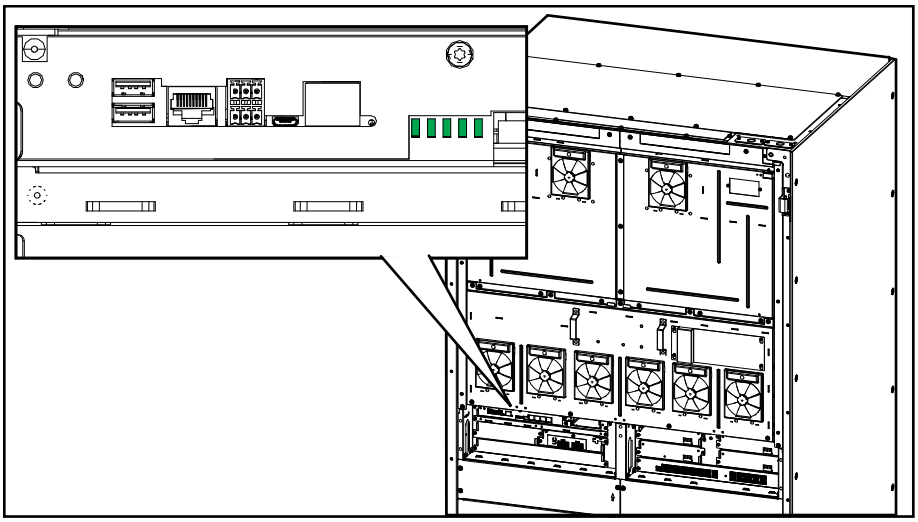

Double conversion (normal operation) 	eConversion mode 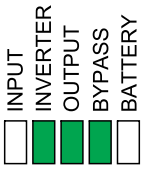
Battery operation (in dual mains system with bypass available) 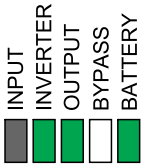	Battery operation (in single mains system or in dual mains system with bypass unavailable) 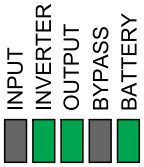
Requested static bypass operation Forced static bypass operation ECO mode 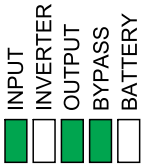	Static bypass standby operation 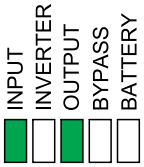
Off mode 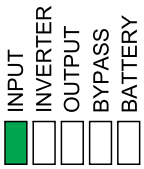	

Status LED on the Power Module

A status LED is present on the on the front of the power module to show the power module status.

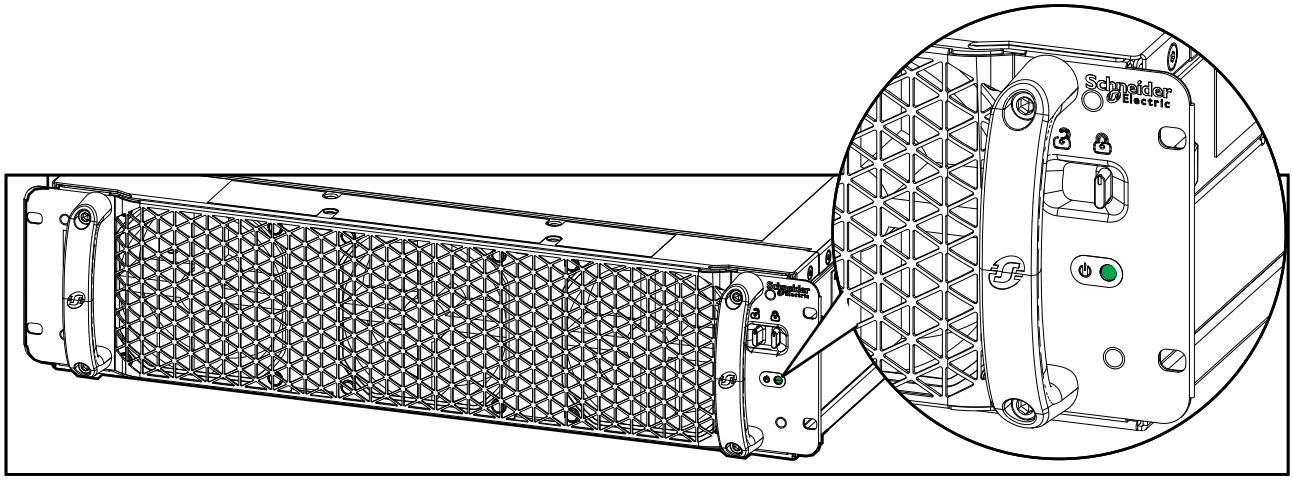

- Green LED on: The power module is operable.
- Green LED blinking (slow): The power module is performing a self-test.
- Green LED blinking (fast): The power module is performing a firmware update.
- Green LED flashing: The power module enable switch is in the OFF (unlocked) position. The power module controller is operating, but the power module is not supplying power to the UPS.
- Red LED on: The power module is inoperable.
- Red LED blinking (slow): The components of the power module have shut down, or the power module has not completed the self-test, or the power module has lost communication with the unit controller.

Export UPS Report to a USB Device

1. Select **Maintenance > UPS report**.
2. Open the front doors.
3. Insert your USB device in one of the USB ports in the system level controller.

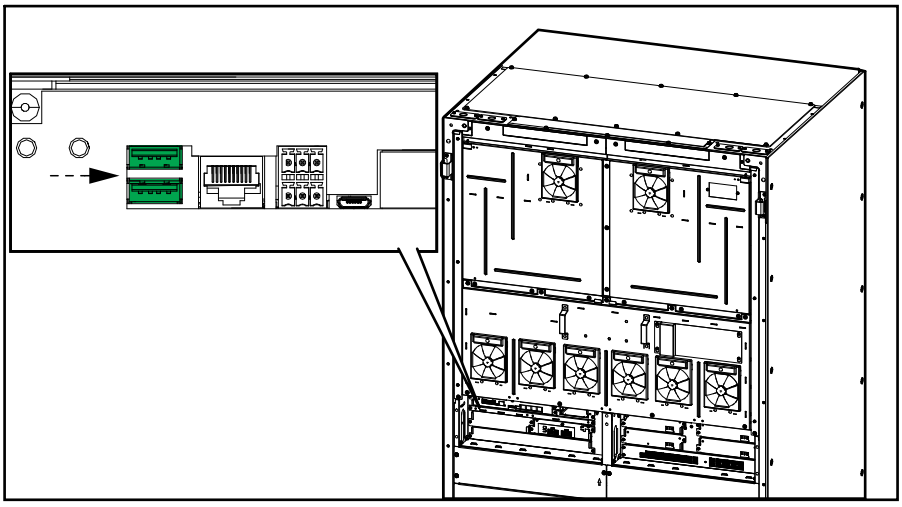

4. Tap **Export** on the display.

   NOTE: Do not remove the USB device until the export process has finished.

5. Send the UPS report to Schneider Electric customer support.

Save the UPS Settings on a USB Device

NOTE: The UPS can only accept settings that were originally saved from the same UPS. Settings saved from other UPSs cannot be reused.

1. Tap **Configuration > Save/restore**.
2. Open the front doors.
3. Insert your USB device in one of the USB ports in the system level controller.

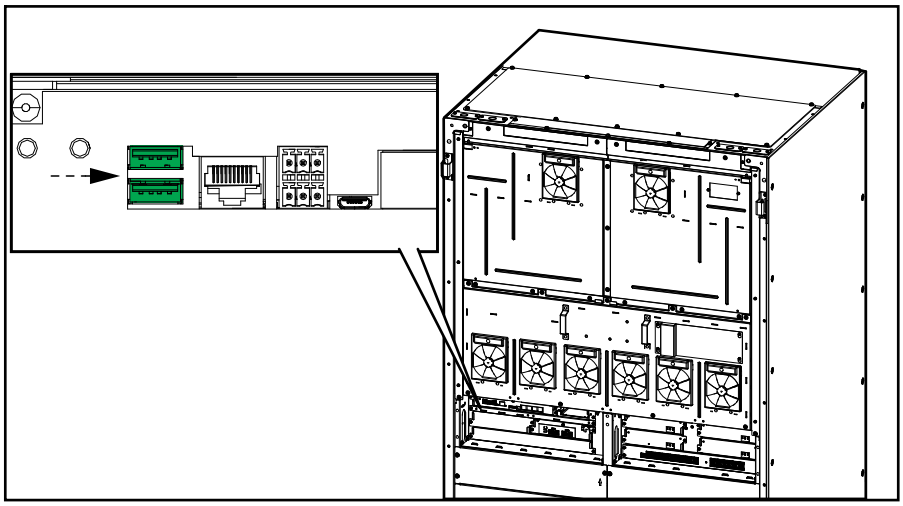

4. Tap **Save** to save the present UPS settings on the USB device.

   NOTE: Do not remove the USB device until the save process has finished.

Restore the UPS Settings from a USB Device

NOTE: The UPS can only accept settings that were originally saved from the same UPS. Settings saved from other UPSs cannot be reused.
Settings can only be restored when the UPS is in maintenance bypass operation or off mode.

1. Tap **Control > Guided sequences > Shut down UPS system** or **Control > Guided sequences > Shut down a UPS in a parallel system**, and follow the steps which appear on the display.

   NOTE: Do not open the unit input disconnect device UIB at the end of the shutdown sequence as this will turn off the power to the display.

2. Select **Configuration > Save/restore**.
3. Open the front door.
4. Insert your USB device in one of the USB ports in the system level controller.

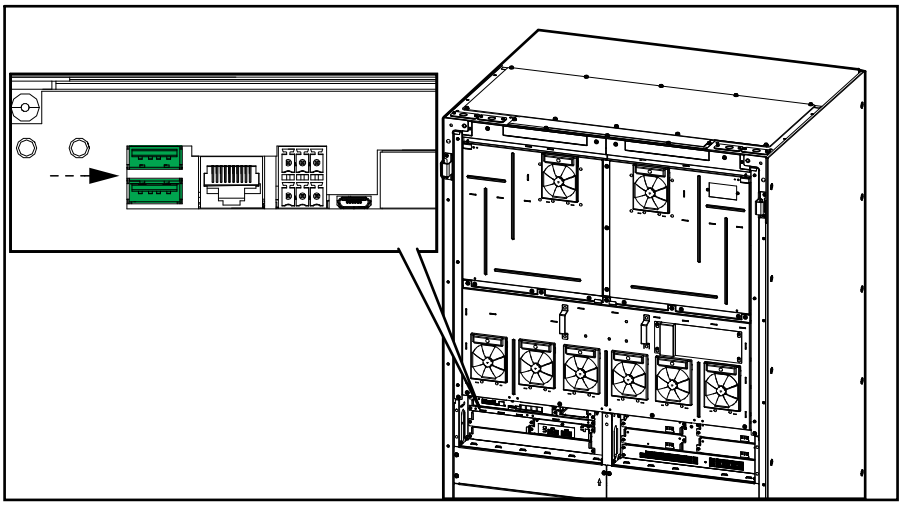

5. Tap **Restore** to implement saved UPS settings from the USB device. Wait for the system level controller to reboot automatically.

   NOTE: Do not remove the USB device until the restore process has finished.

6. Select **Control > Guided sequences > Start up UPS system** or **Control > Guided sequences > Start up a UPS in a parallel system**, and follow the steps which appear on the display.

Shut Down the UPS System into Maintenance Bypass Operation with an Inoperable Display

NOTE: If the display is operable, always go to **Control > Guided sequences** and follow the steps on the display to shut down the UPS.

1. Press and hold the inverter OFF button on the system level controller for 5 seconds. This will transfer the UPS to forced bypass operation. Check that the inverter LED is off and the bypass LED is green on the system level controller. See Status LED Lighting per UPS Operation Mode, page 86.
2. Close the maintenance bypass disconnect device MBB.
3. **In a parallel system**: Open the system isolation disconnect device SIB.
4. Open the unit output disconnect device UOB.
5. Open the static switch input disconnect device SSIB (if present).
6. Open the battery disconnect device(s).
7. Open the unit input disconnect device UIB.
8. **In a parallel system**: Repeat step 4 to 7 for the other UPSs in the parallel system.

Start Up the UPS System from Maintenance Bypass Operation with an Inoperable Display

NOTE: If the display is operable, always go to **Control > Guided sequences** and follow the steps on the display to start up the UPS.

1. If open, close the unit input disconnect device UIB.
2. Close the static switch input disconnect device SSIB (if present).
3. Close the bypass backfeed disconnect device BF2 (if present).
4. Close the battery disconnect device(s).
5. Press and hold the inverter ON button on the system level controller for 5 seconds. This will turn on the inverter and transfer the UPS to inverter operation (eConversion or double-conversion mode). Check that the inverter LED is green on the system level controller. See Status LED Lighting per UPS Operation Mode, page 86.
6. Close the unit output disconnect device UOB.
7. **In a parallel system**: Repeat step 1 to 6 for the other UPSs in the parallel system.
8. **In a parallel system**: Close the system isolation disconnect device SIB (if present).
9. Open the maintenance bypass disconnect device MBB.

Schneider Electric
1884 Boulevard de la Défense
92000 Nanterre
France

www.se.com



© 2023 – 2026 Schneider Electric. All rights reserved.

990-55222E-001