NetShelter™ SX Advanced Cabinet

Unpacking & Repacking Shock Packaging Guide

AR9XXXSPB2

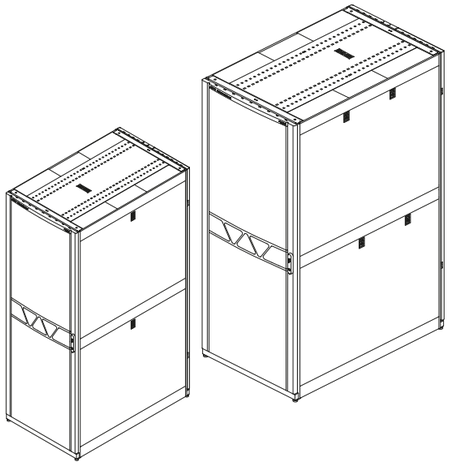

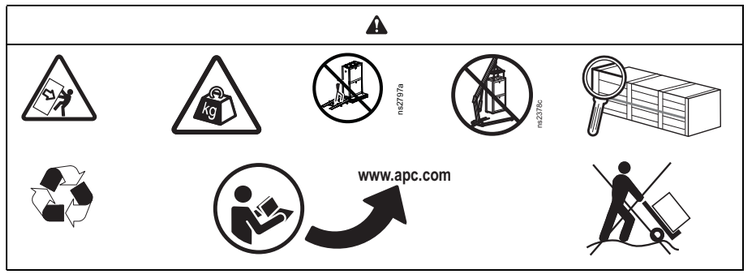

NOTE: You must purchase a ramp (AR9000RAMPX886) to unload the cabinet.

⚠ WARNING

HEAVY EQUIPMENT HAZARD

- Verify that the installation site is structurally capable of supporting the combined weights of the cabinet and the installed equipment (see the **Weight and Dimensions** table).
- Do not use eye bolts or other means to lift the cabinet.
- Use at least four people to unpack and move the cabinet.

Failure to follow these instructions can result in death, serious injury, or equipment damage.

Weight and Dimensions

	Cabinet Weight (unloaded) kg (lb)	Depth Ⓐ mm (in.)		Width Ⓑ mm (in.)		Height Ⓒ mm (in.)			
		1295 (51.0)	1470 (57.9)	750 (29.5)	800 (31.5)	2256 (88.9) 48U	2436 (95.9) 52U		
AR9557SPB2	288 (635)	●		●		●			
AR9558SPB2	305 (672)	●		●			●		
AR9587SPB2	298 (657)	●			●	●			
AR9588SPB2	310 (683)	●			●		●		
AR9657SPB2	288 (635)		●	●		●			

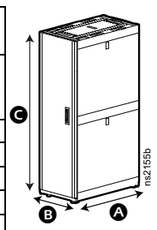

Weight and Dimensions (continued)

	Cabinet Weight (unloaded) kg (lb)	Depth Ⓐ mm (in.)		Width Ⓑ mm (in.)		Height Ⓒ mm (in.)			
		1295 (51.0)	1470 (57.9)	750 (29.5)	800 (31.5)	1991 (78.4) 42U	2125 (83.7) 45U	2256 (88.9) 48U	2436 (95.9) 52U
AR9658SPB2	306 (675)		●	●					●
AR9550SPB2	258 (569)	●		●		●			
AR9555SPB2	273 (534)	●		●			●		
AR9580SPB2	262 (578)	●			●	●			
AR9585SPB2	280 (617)	●			●		●		
*Lower the leveling feet before installing more than 1588 kg (3500 lb).									

Maximum Installed Equipment Weight

Shipping: 1588 kg (3500 lb) **Rolling:** 1588 kg (3500 lb) **Static*:** 1928 kg (4250 lb)

Unpacking Guide

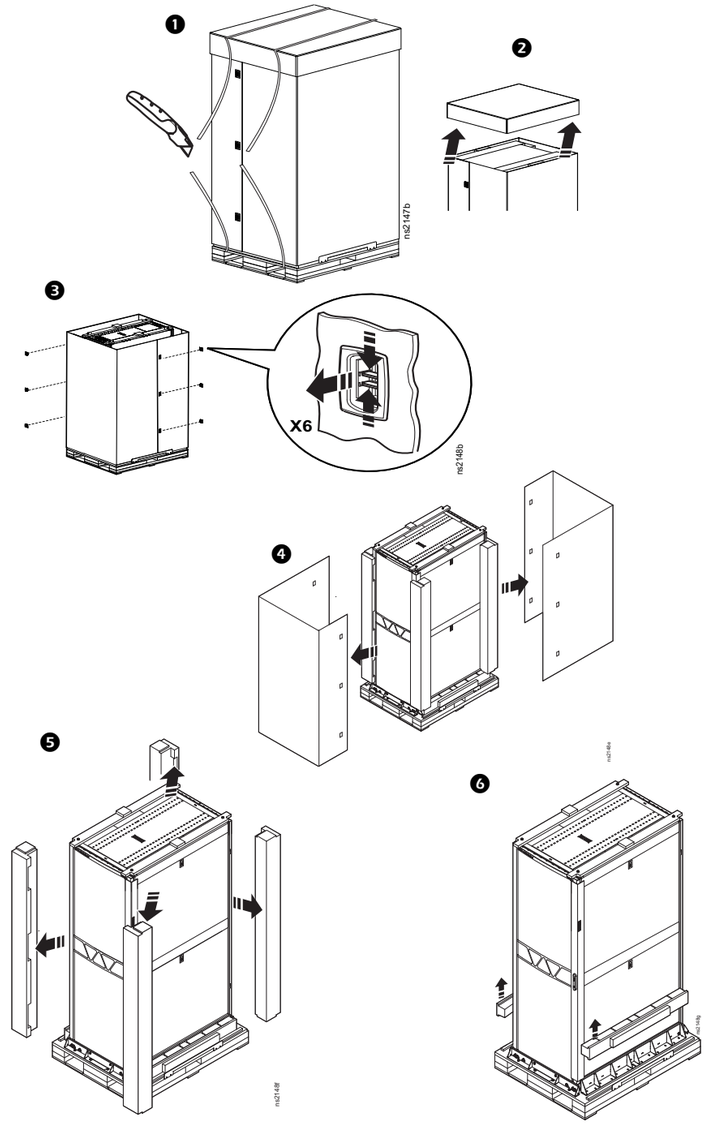

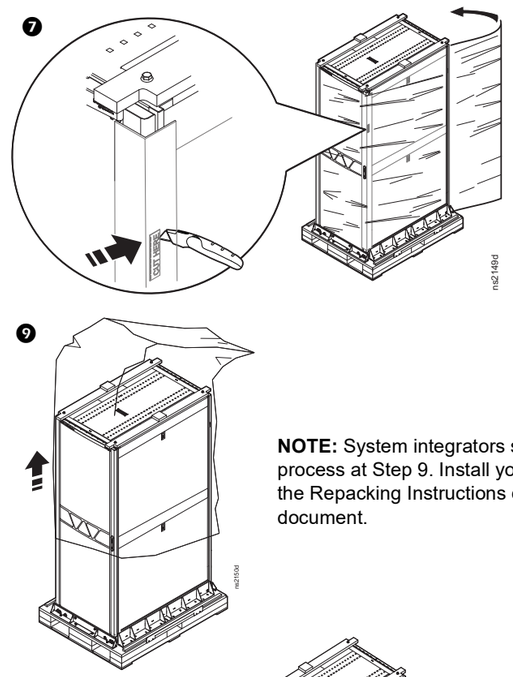

NOTE: System integrators stop the unpacking process at Step 9. Install your equipment, then follow the Repacking Instructions on page 2 of this document.

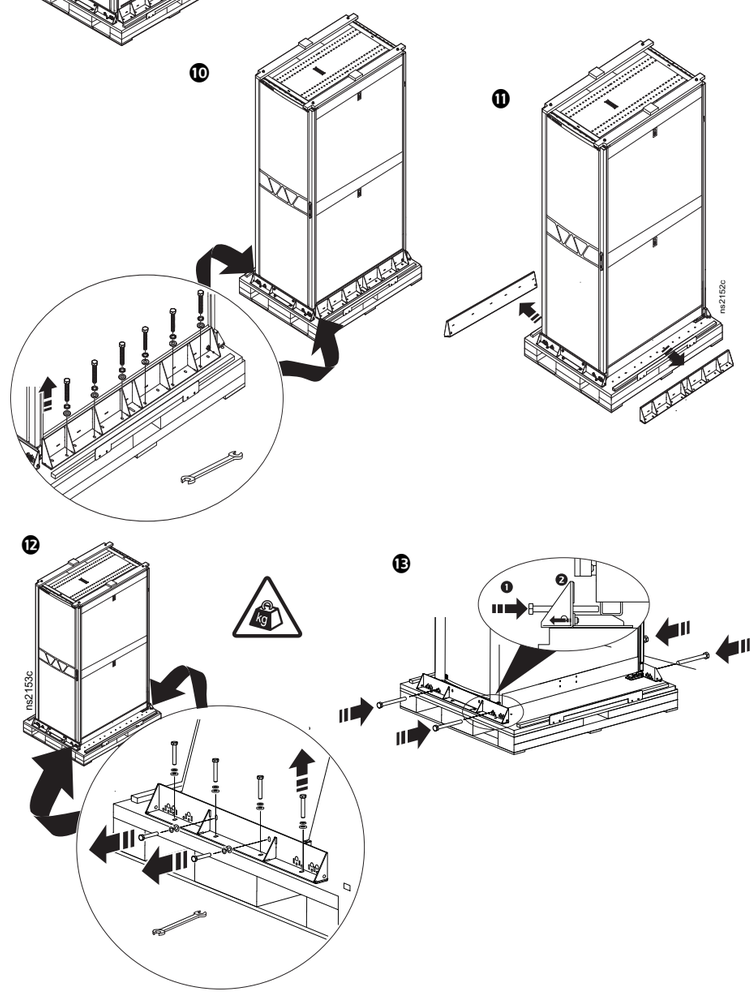

Unpacking Guide (continued)

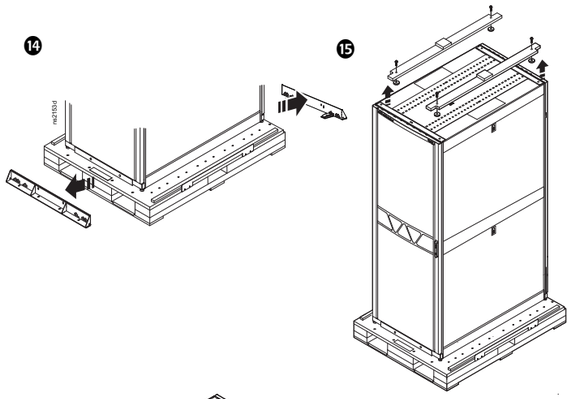

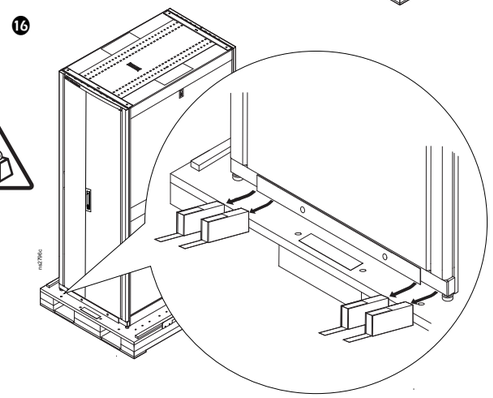

17 Attach the ramp (AR9000RAMPX886, not provided) to the pallet near the rear of the cabinet.
See the ramp documentation for instructions.

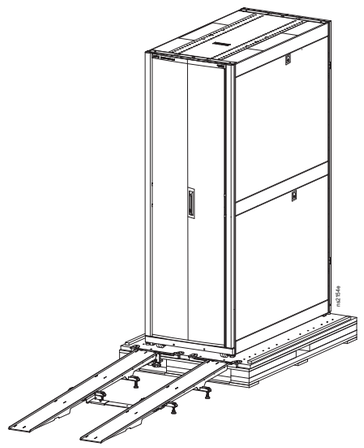

Worldwide Customer Support

Contact **www.apc.com** for more information.

© 2025 Schneider Electric. All rights reserved.

EN TME66805A **07/2025**

⚠ WARNING

HEAVY EQUIPMENT/TIP HAZARD

- Do not use eye bolts or other means to lift the cabinet.
- This cabinet is easily tipped. Use extreme caution when moving.
- Use at least four people to unpack and move the cabinet.
- Before moving the cabinet on its casters, load 159 kg (350 lbs) of equipment into the bottom of the cabinet for extra stability.
- When moving the cabinet on its casters:
  - Be sure the leveling feet are up.
  - Be sure that movers are positioned at the sides of the cabinet and that no people or objects are in the path of the cabinet.
  - Push the cabinet only forward or backward. Do not push the cabinet sideways.

Failure to follow these instructions can result in death, serious injury, or equipment damage.

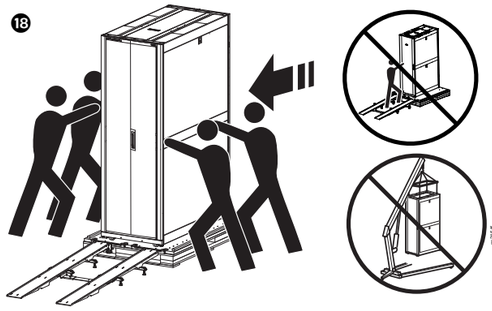

19 You can remove the door transportation stiffeners after unpacking the cabinet.

NOTE: The illustration shows the front door with a section view of the interior cabinet.

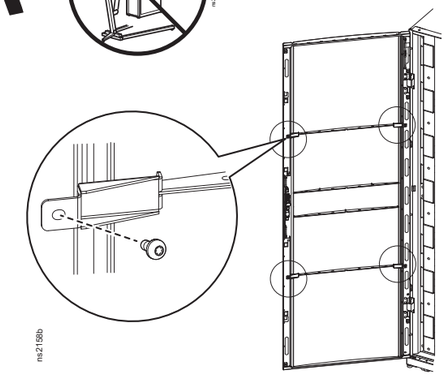

Repacking Guide

