NetShelter™ Powershelf Installation and Quick Start Guide for 21” Rack

APC 33kW 19" POWERSHELF

SENVPS33KB2

(SENVPS33KL-NP + SENVPSU5K5B2X6)

SENVPS33KB3

(SENVPS33KB3L-NP + SENVPSU5K5B3X6)

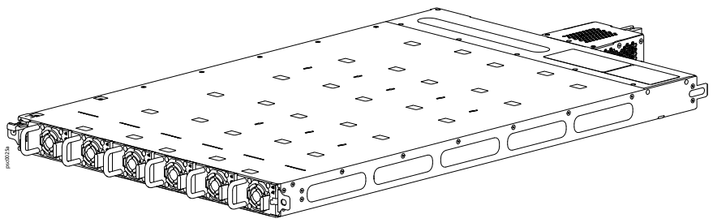

Customer support and warranty information is available at **www.se.com**

© 2025–2026 Schneider Electric. APC and the APC logo are trademarks of Schneider Electric SE or its subsidiaries. All other brands may be trademarks of their respective owners.

EN JPT36023A **06/2026**

Important Information

The Powershelf is an in-rack centralized power device accommodating high Power Supply Units (PSUs), which replaced traditional CRPS (Common Redundant Power Supply) distributed in each server to centrally power all the servers more efficiently with higher power density.

For more information about APC products, go to **www.se.com**.

See the *Power Supply Unit and Power Shelf Controller (PSC)* user guides for detailed information on installation and operation.

Enter your Powershelf model number in the search bar at **www.se.com**, then select your Powershelf to view the product page, including all related documentation.

Warranty information is available at **www.se.com**.

You can register your product online at **www.se.com**.

NOTE: For important safety information, see the Safety Sheet.

⚠ ⚠ DANGER

HAZARD OF ELECTRIC SHOCK, EXPLOSION, OR ARC FLASH

- Make sure the Powershelf is reliably grounded.
- Use only the supplied hardware.

Failure to follow these instructions will result in death or serious injury.

⚠ WARNING

HAZARD OF HIGH VOLTAGE

- Disconnect power at the circuit or main power switch before installation or maintenance.
- Install and operate the Powershelf only in a controlled location with restricted access.
- Do not allow unqualified personnel to install or operate the Powershelf.

Failure to follow these instructions can result in death or serious injury.

NOTICE

HAZARD OF EQUIPMENT DAMAGE

- Make sure that the input connector are properly secured to the Powershelf.
- Do not plug or unplug the Powershelf's input/output connectors while the unit is energized.
- Do not operate the power shelf without a UPS in unstable power environments.

Failure to follow these instructions can result in equipment damage.

Additional Documentation

You can access the latest documentation for this product using the following options:

- *go2se.com/product/ref=<model number>. For example go2se.com/product/ref=SENVPS33KB2.*
- Scan the QR code to access the product documentation.

Visit **www.se.com**, select your location, and search using the product model number.

Receiving and Unpacking

Inspect the equipment

Carefully inspect the exterior of the shipment immediately upon receipt. If you detect shipping damage, contact your shipping company and APC Customer Support at **www.se.com**.

The shipping materials are recyclable. Save them for later use, or dispose of them appropriately.

Storage

NOTICE

HAZARD OF EQUIPMENT DAMAGE

Do not allow the equipment to be exposed to the elements. Keep it covered to avoid damage and warranty loss.

Failure to follow these instructions can result in equipment damage

Installation

1. Install the two adapters ❶ to the designated positions and secure the both latches ❷ on the rack.
   Install the six M5 x 10 pan head self tapping screws ❸ and torque tighten the screws to 30 kgf·cm. See the below illustration.

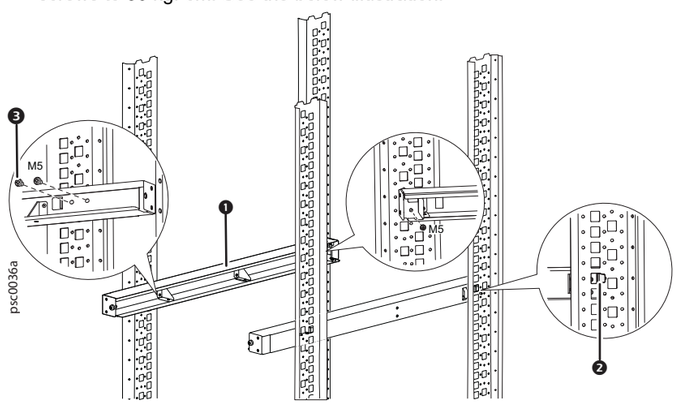

2. Align the pad ❷ with the two cut features and the left and right edges of the Powershelf and remove the release paper ❶, then stick it onto the Powershelf. See the below illustration.

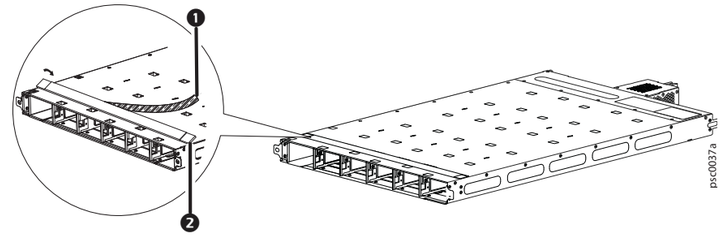

3. Install the Powershelf ❶ into the rack along the adapter until its mounting ears align with it. Install the two M6 x 1 x 14L screws (including spring and flat washers). Torque tighten the screws to 30 kgf·cm.
   Make sure that the Powershelf engaged with the busbar ❷ and the adapter ❸. See the below illustration.

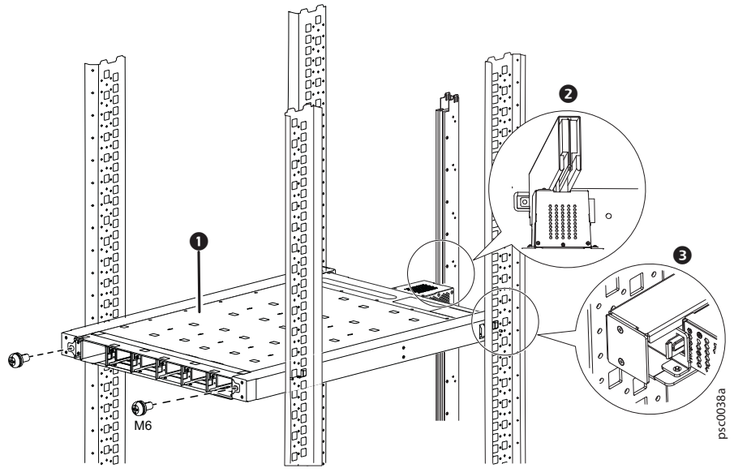

4. Install the PSU modules ❶ into the Powershelf along the slot until the latch fit into position (6 slots for option). See the below illustration.
   Make sure that the label facing upwards while installation of the PSU.
   Insert the latch fully into the slot and assemble it evenly to secure the module.

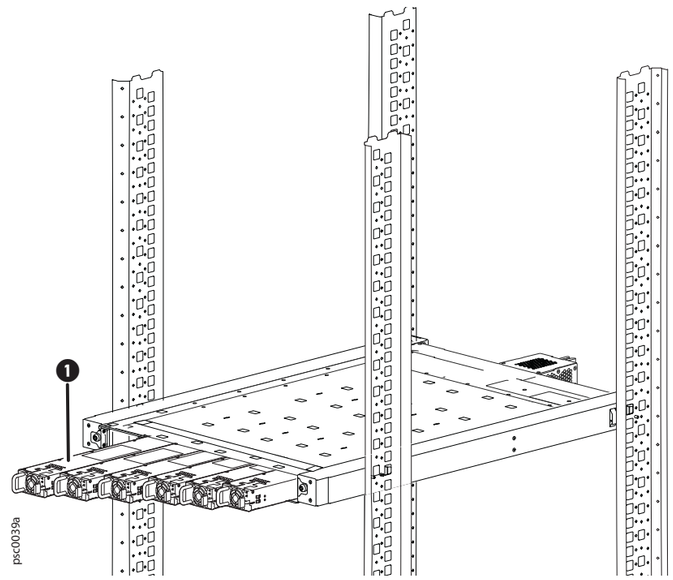

5. Install the PSC module ❶ into the Powershelf along the slot until the latch fit into position. (The PSC module is pre-installed by default in the Powershelf). See the below illustration.

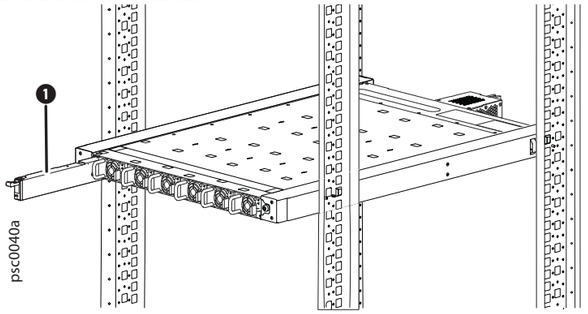

6. Install the AC input whip ❶. See the below illustration.

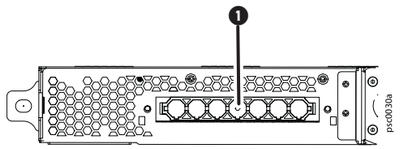

7. Connect to the power cable ❶ into the Powershelf. See the below illustration.

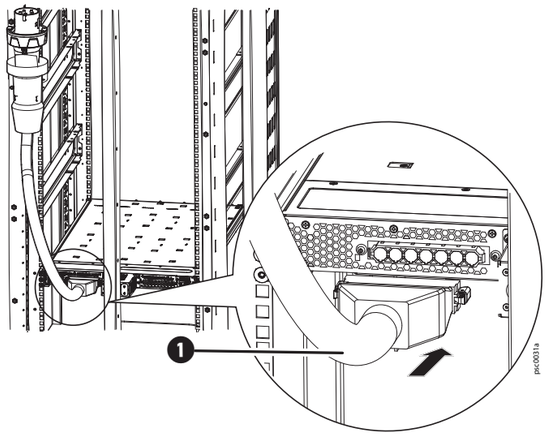

8. Install daisy-chain cables between each MCU, ensuring proper upstream and downstream connections, and interconnect the powershelf's in the same daisy-chain configuration. See the below illustration.

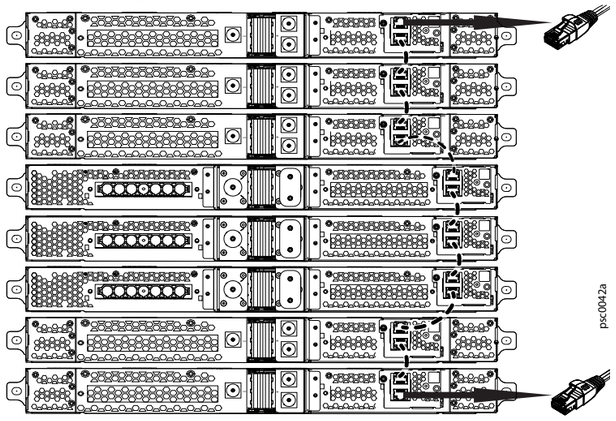

Quick Start Instructions

NOTE:

- See the *Powershelf User Guide* available online at **www.se.com** for detailed instructions on configuring your settings.
- For security reasons, the username and password must be changed immediately after the first login.

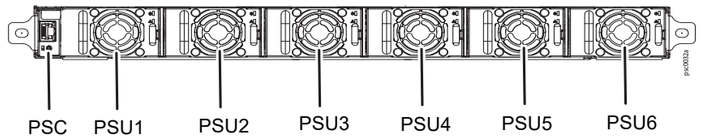

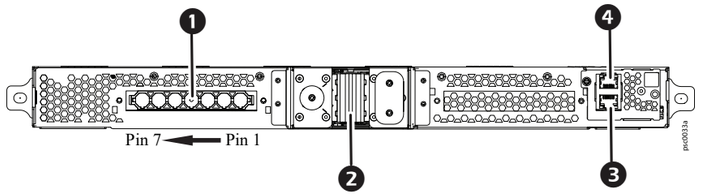

	Description
❶	Whip 1
❷	Busbar Clip
❸	RJ45-2
❹	RJ45-1

PSU and Whip Pin Connection

Pin number	WYE	PSU Connection 1 Whip SKU
1	L1	PSU3, PSU4
2	N1	PSU3, PSU4
3	L2	PSU2, PSU5
4	PE	Shelf Chassis
5	N2	PSU2, PSU5
6	L3	PSU1, PSU6
7	N3	PSU1, PSU6

PSU Indicator

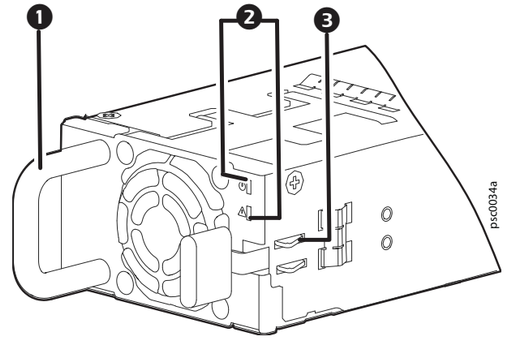

	Description
❶	Handle
❷	LED Indicators
❸	Latch

Type/condition	Green LED	Amber LED
Blinking	Sync Start State, PSU is ready to turn on and awaiting the sync Start signal	Firmware loading
Solid State	50V ON and available	50V Fault detected
OFF State	50V OFF	50V Normal

PSC Network Connector

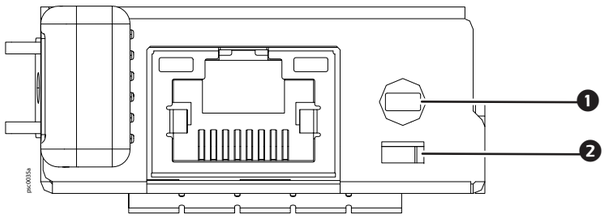

	Description
❶	Reset Button
❷	LED Indicator

Indicator color	State
Green	Power supply OK / PSC startup
Yellow	PMC is 60 °C to 70 °C or -25 °C to <-5 °C
Red	PMC is temperature > 70 °C or < -25 °C