128, av. du Maréchal-de-Lattre-de-Tassigny - 87045 LIMOGES Cedex
Tel: 33 (0) 5 55 06 87 87 - Fax: 33 (0) 5 55 06 88 88
www.legrand.com

# Niloé™
# Dismatic 20A

**Cat. No(s): NP7310BK - NP7310MG - NP7310WH**

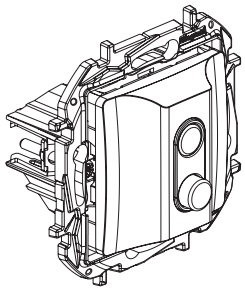

NP7310..

## 1. USE

Circuit breaker.
Supplied with cover plates and supports. To be equipped with plates. Flush-mounting or surface-mounting.
Screw or claw fixing

## 2. RANGE

| Description | White | Medium Grey | Black |
|---|---|---|---|
| Dismatic | NP7310WH | NP7310MG | NP7310BK |

## 3. DIMENSIONS (mm)

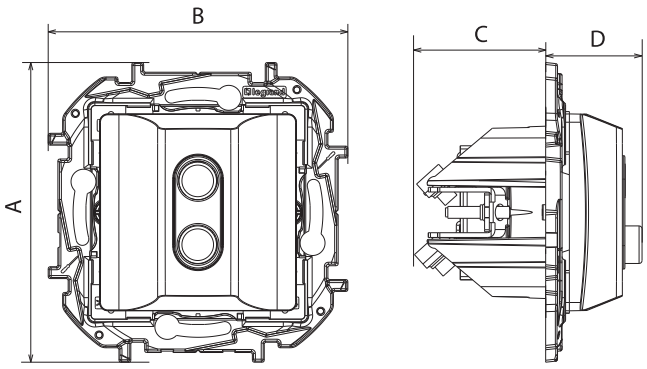


| A | B | C | D |
|---|---|---|---|
| 75.8 | 75.8 | 33.2 | 24.4 |

## 4. CONNECTION

Type of terminals: screws
Terminal capacity: 2 x 2.5 mm²
Stripping length: 10 mm

Compatible with flexible or rigid cables.

## 5. TECHNICAL CHARACTERISTICS

### ■ 5.1 Mechanical characteristics

Protection against solid bodies and liquids: IP 20
Protection against mechanical impact: IK 04

### ■ 5.2 Material characteristics

Polyglass appearance
Mechanism casing: PC
Halogen-free
Claws: steel

Support frame: PC + GF 10%
Halogen-free

Self-extinguishing:
850°C/30 s for insulating components holding live parts in place.
650°C/30 s for other insulating components.

### ■ 5.3 Electrical characteristics

Voltage: 250 V~
Current: 20 A
Frequency: 50/60 Hz

### ■ 5.4 Climate characteristics

Storage temperature: -10°C to + 70°C
Usage temperature: -5°C to + 40°C

## 6. CLEANING

Surface cleaning with a cloth.
Do not use: acetone, tar remover, trichloroethylene.

Maintenance with the following products:
Hexane, Methylated spirit, Soapy water, Diluted ammonia, Bleach diluted to 10%, Window-cleaning products.

**Caution:** Always test before using special cleaning products.

## 7. STANDARDS AND APPROVALS

Compliance with standards of installation and manufacturing.
Refer to e. catalogue.
The undersigned, LEGRAND, declares that the radio-electric equipment type (Cat. No NP7310BK - NP7310MG - NP7310WH) complies with directive 2014/53/EU.
The full text of the EU declaration of conformity is available on the following website: www.legrand.com/ecatalogue