128, av. du Maréchal-de-Lattre-de-Tassigny - 87045 LIMOGES Cedex
Tel: 0 (+33) 5 55 06 87 87 - Fax: 0 (+33) 5 55 06 88 88
www.legrand.com

# Valena™ Life
# Double USB sockets Type-A+C;Type-C+C power delivery

**Cat. No(s): 7 531 07A - 7 532 07A - 7 533 07A - 7 563 07A - 7 531 56 - 7 532 56 - 7 533 56 - 7 563 56**

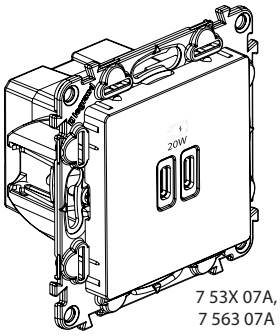

7 53X 07A,
7 563 07A

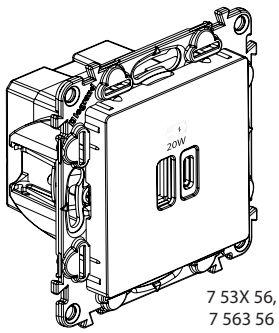

7 53X 56,
7 563 56

## 1. USE

For recharging portable devices such as phones, smartphones, tablets, MP3, MP4, loudspeakers, watches, game consoles, powerbanks.
Fixing with screw and/or claw.

## 2. RANGE

| Description | White | Ivory | Aluminium | Black |
|---|---|---|---|---|
| 2XUSB TYPE A+C | 7 531 56 | 7 532 56 | 7 533 56 | 7 563 56 |
| 2XUSB TYPE C+C | 7 531 07A | 7 532 07A | 7 533 07A | 7 563 07A |

## 3. DIMENSIONS (mm)

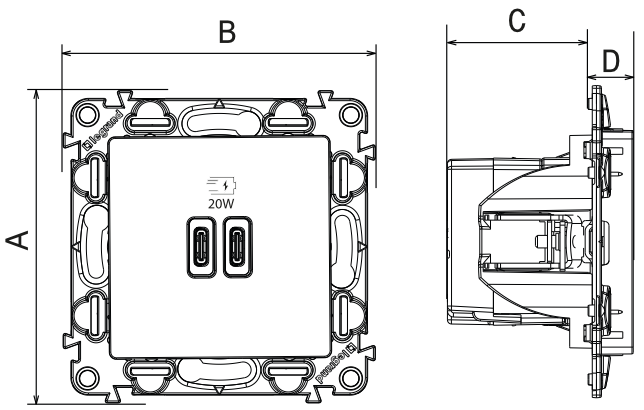


| A | B | C | D |
|---|---|---|---|
| 74.7 | 74.7 | 34.7 | 9.8 |

## 4. CONNECTION

Flexible or rigid cables compatible.
Type of terminals:
Screw terminal
Terminal capacity:
2 X 2.5mm²
Stripping length:
6mm
Usb socket:
Prewired socket

## 5. TECHNICAL CHARACTERISTICS

### ■ 5.1 Mechanical characteristics

Protection against solid bodies and liquids: IP20
Protection against impact: IK04

### ■ 5.2 Material characteristics

Polygloss apperaance
Material: - Base: PC
- Socket covers: ABS
- Halogen-free
- UV resistant

Self-extinguishing:
850°C/30 s for installing components holding live parts in place
650°C/30 s for other insulating components

### ■ 5.3 Electrical characteristics

All values listed below are measured at an ambient temperature +20°C and after 30 minutes of operation.

| | | |
|---|---|---|
| Nominal input voltage | 100-240V~ | |
| Nominal input frequency | 50/60Hz | |
| Max. output power | 20.0W | |
| Nominal input current | 0.5A | |
| Max. nominal output current | 3.0A | |
| Nominal output voltage | 5.0 V⎓ | |
| Average efficiency in active mode | 88% → 1 output | 85% → 2 outputs |
| Stand-by power consumption | 0.08W | |
| Consumption class without load and average level of efficiency: Level VI | | |
| Protection class | II - Low voltage | |

## 5. TECHNICAL CHARACTERISTICS (continued)

| |
|---|
| One Output A: |
| 5.0V ⎓ 3.0A |
| 9.0V ⎓ 2.0A |
| 12.0V ⎓ 1.5A |
| One Output C: |
| 5.0V ⎓ 3.0A |
| 9.0V ⎓ 2.2A |
| 12.0V ⎓ 1.6A |
| Two Outputs: |
| 5.0V ⎓ 1.5A |
| 5.0V ⎓ 1.5A |

***Note:** European Regulation No. 278/2009 of 6 April 2009, Directive 2009/125/EC on eco-design requirements for AC/DC power supplies.

Note: To optimize the charging time of your device, ensure turn it off during the charging phase.

**■ 5.4 Climate characteristics**
Usage temperature: 0°C to +45°C
Storage temperature: -20°C to +70°C

## 6. MAINTENANCE

Surface cleaning with a cloth.

Do not use:
Acetone, tar remover, trichlorothylene.

Maintenance with the following products:
Hexane, Methylated spirit, Soapy water, Diluted ammonia, Bleach diluted to 10%, Window-cleaning products.

**Caution:** Always test before using other special cleaning products.

## 7. STANDARDS AND APPROVALS

The undersigned, LEGRAND, declares that the radio-electric equipment type (Cat. Nos 7 531 07A - 7 532 07A - 7 533 07A - 7 563 07A - 7 531 56 - 7 532 56 - 7 533 56 - 7 563 56) complies with directive 2014/53/EU.
The full text of the EU declaration of conformity is available on the following website: www.legrand.com/ecatalogue