128, av. du Maréchal-de-Lattre-de-Tassigny - 87045 LIMOGES Cedex
Tel: 33 (0) 5 55 06 87 87 - Fax: 33 (0) 5 55 06 88 88
www.legrand.com

Valena™ Life
Fixing claws

Cat. No(s): 7 540 14/15/16/17

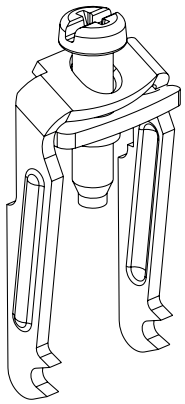
7 540 14

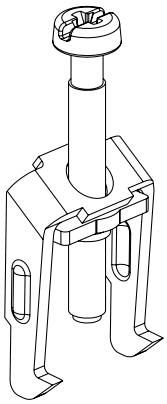
7 540 15

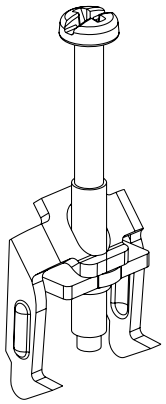
7 540 16

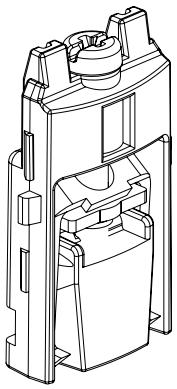
7 540 17

1. USE

Valena Life fixing claws for standard functions 10 pcs/package (7540 14), for 2*2P+E schuko flush-mounting socket (7 540 15), 2P+E schuko socket with USB type C (7 540 16), for cable outlet (7 540 17).

2. RANGE

Description	Mechanism Only
Fixing claws for standard functions	7 540 14
Fixing claws for 2*2P+E schuko socket	7 540 15
Fixing claws for 2P+E schuko socket with USB type C	7 540 16
Fixing claws for cable outlet	7 540 17

3. DIMENSIONS (mm)

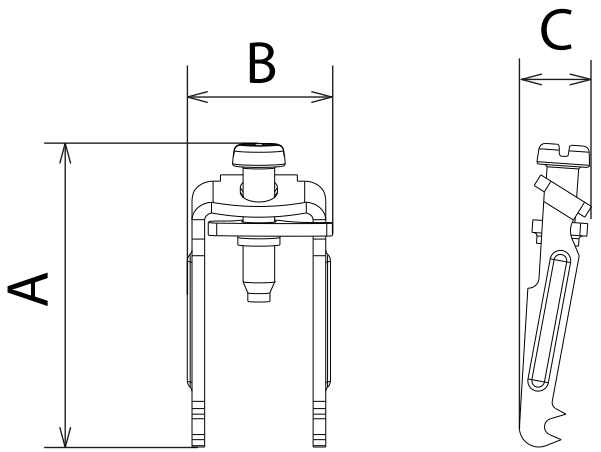

References	A	B	C
7 540 14	28.8	13.6	6.8
7 540 15/16	32.3	13.8	5.8
7 540 17	32	18.8	7

5. TECHNICAL CHARACTERISTICS

■ 5.1 Material characteristics

Polygloss appearance
Material of the support: - Metal

Self-extinguishing:
+ 850° C / 30 s for insulating parts holding live parts in place
+ 650° C / 30 s for other parts made of insulating materials

■ 5.2 Climatic characteristics

Storage temperature: - 10° C to + 70° C
Use temperature: - 5° C to + 40° C

6. MAINTENANCE

Surface cleaning with a cloth.
Do not use: acetone, tar remover, trichloroethylene.

Maintenance with the following products: Hexane, Methylated spirit,

Soapy water, Diluted ammonia, Bleach diluted to 10%,
Window-cleaning products.

Caution: A preliminary test should be carried out if other specific cleaning products are to be used.

7. STANDARDS AND APPROVALS

The undersigned, LEGRAND, declares that the radio-electric equipment type (Cat. Nos 7 540 14 - 7 540 15 - 7 540 16 - 7 540 17) complies with directive 2014/53/EU.The full text of the EU declaration of conformity is available on the following website: www.legrand.com/ecatalogue