87045 LIMOGES Cedex
Téléphone : 05 55 06 87 87 – Télécopie : 05 55 06 88 88

Isolating switch DX³-IS
1 module per pole, 63A

Cat N°(s) : 4 064 53



CONTENTS Page

1. Description, use 1
2. Range 1
3. Overall dimensions 1
4. Preparation - Connection 1
5. General Characteristics 2
6. Compliances and approvals 3
7. Auxilaries and accessories 4

1. DESCRIPTION - USE

Isolating switch ensuring the breaking and the isolation of electrical circuits.

Fully visible breaking indication.

2. RANGE

Polarity and symbols :

2-poles 400V~ 63A

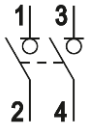

3. OVERALL DIMENSIONS

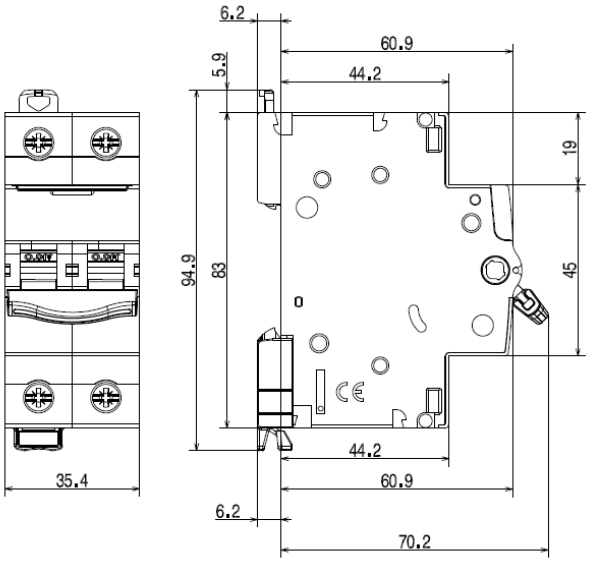

4. PREPARATION - CONNECTION

Mounting :

. On symmetrical EN 60.715 rail or DIN 35 rail.

Operating positions:

.Vertical Horizontal Upside down On the side

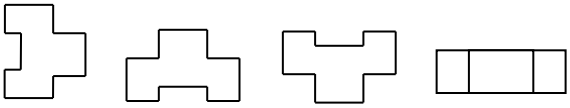

4. PREPARATION - CONNECTION *(continued)*

Power supply:

. Either from the top or the bottom.

Module maintenance :

. Isolating switches may be replaced in the middle of a row supplied with busbars without disconnecting the other products.

Unscrew the terminals completely

Put the clamp in the unlocking position with a screwdriver

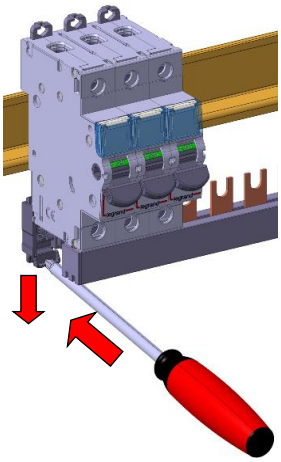

Pull the device upward

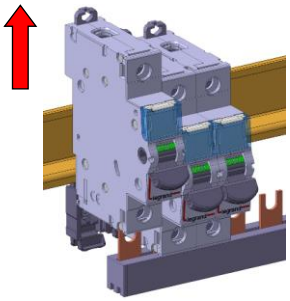

Pull the device downward in order to release it completely from the prongs of the busbar. Then pull the device forward.

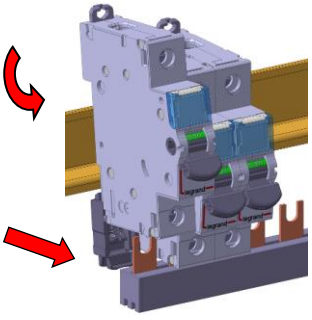

Isolating switch DX³-IS
1 module per pole, 63A

Cat N°(s) : 4 064 53

4. PREPARATION - CONNECTION *(continued)*

Connection:

. Terminals protected against direct contact IP20, wired device.
. Cage terminals, with release and captive screws.
. Terminals fitted with shutters preventing a cable being placed under the terminal, with the terminal partly open or closed.
. Alignment and spacing of the terminals permitting connection with the other products in the range via prong supply busbars.

. Terminal depth : 14 mm.
. Screw head: mixed, slotted and Pozidriv no. 2.
. Tightening torques:
- Min: 2 Nm.
- Recommended: 3 Nm.
- Max: 3.5 Nm.

Conductor type:

. Copper cable or supply busbar.
. Cable cross-section:

	Without ferrule	With ferrule
Rigid cable	1 conductor 1.5 to 35 mm² 2 conductors 1.5 to 16 mm²	
Flexible cable	1 conductor 1.5 to 25 mm² 2 conductors 1.5 to 10 mm²	1 conductor 1.5 to 25 mm²

Recommended tools:

. For the terminals:
- Screwdriver with 5.5 to 6.5 mm blade.
- Pozidriv no. 2 screwdriver.

. For attaching or removing the DIN rail:
- Screwdriver with 5.5 to 6 mm blade.
- Pozidriv no. 2 screwdriver.

Manual actuation of the Isolating switch:

. Ergonomic 2-position handle:
- "O-OFF": Device open.
- "I-ON": Device closed.

Contact status display:

. By marking of the handle:
- "O-OFF" in white on a green background = contacts open.
- "I-ON" in white on a red background = contacts closed.

Locking:

. Padlocks possible in the open and closed positions with padlock support (Cat. No. 4 063 03) and Ø5 mm padlock (Cat. N°. 4 063 13) or Ø6 mm padlock (Cat. N°. 0 227 97).

Sealing:

. Possible in the open or closed positions.

Labelling:

. Circuit identification by way of a label inserted in the label holder situated on the front of the product.

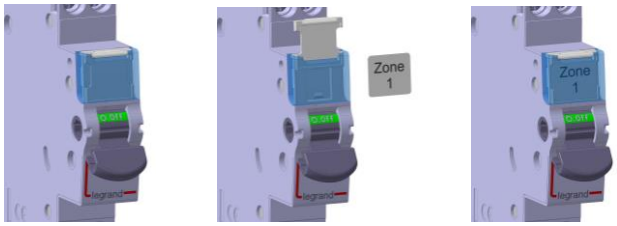

5. GENERAL CHARACTERISTICS

Marking on the front side:

. By permanent ink pad printing.

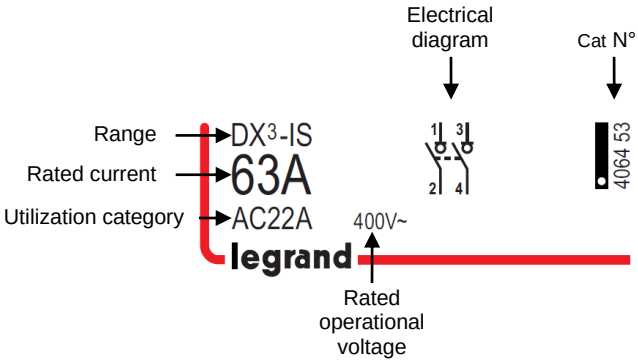

Marking on the upper panel:

. By permanent ink pad printing

Approvals → BS 60669-2-4

Rated operational voltage :

. Ue = 400 V ~

Rated frequency :

. 50/60 Hz with standard tolerances.

Breaking capacity :

. Rated conditional short-circuit current in combination: see coordination table on page 4.

. Maximum capacity switching on short-circuit : 4500 A

Following IEC/EN 60947-3 :
. Icw = 2000 A
. Icm = 3000 A
Following IEC/EN 60669-2-4 :
. Inc =4500 A with fuse of same rated current.

Insulation voltage:

. Ui = 500 V

Rated impulse withstand voltage:

. Uimp = 6 kV

Isolating switch DX³-IS
1 module per pole, 63A

Cat N°(s) : 4 064 53

5. GENERAL CHARACTERISTICS *(continued)*

Direct current utilization :

. 48V (110V with 2 poles serial cabling).

Utilization category:

. AC22 : Mixed load.
. A : Frequent operations.
. AC23 : Inductive load. Complies with IEC/EN 60947-3. Characteristic not marked on product

Degree of pollution:

. 3 in accordance with standard IEC 60664-1.

Power dissipated per pole :

1.67W

Degree or class of protection:

. Terminals protected against direct contact, Class of protection against solid objects and liquids (wired device): IP20 in accordance with standards IEC 529 – EN 60529 and NF 20-010.
. Class II in relation to metallic conductive parts.
. Class of protection against mechanical impacts IK04 in accordance with standard EN 62262.

Plastic materials:

. Polyamide, PBT and PC

Enclosure heat and fire resistance:

. Resistance to glow wire tests at 960°C, in accordance with standard IEC 60695-2-10 & 60695-2-11.
. Classification V2, in accordance with standard UL94.

Higher heating potential:

. The heat potential is assessed at 2.48MJ

Closing and opening effort via the handle:

. To swith off: 13N
. To swith on: 34N

Mechanical endurance:

. Compliant with standard IEC/EN 60947-3 & IEC/EN 60669-2-4
. 200 000 operations with no load.

Electrical endurance:

. Compliant with standard IEC/EN 60947-3 & IEC/EN 60669-2-4
. 20 000 operations with load AC22A (in accordance with IEC/EN 60947-3).
. 1 500 operations with load AC23A (in accordance with IEC/EN 60947-3).

Vibrations and tremors resistance :

. Compliant with appendix Q category F
of standard IEC/EN 60947-1.

Ambient temperatures:

. Operation: from - 25 °C to + 70 °C.
. Storage: from - 40 °C to + 70 °C.

5. GENERAL CHARACTERISTICS *(continued)*

Short-circuit behavior in coordination with upstream protection:

. Tests performed according to the protocol of IEC/EN 60669-2-4 : The device remains fully functional and meets the switch tests after suffering two short circuit established in coordination with the DPCC of the following table.
- The first short circuit being set at an angle of 45 °.
- The second being provided by the switching on of the isolator switch on the short-circuit.

Rated voltage 400V~		**Inc (kA)**
Upstream protection		**63A**
MCB	DX³ 4500A/6kA	6
	DX³ 6000A/10kA	10
	DX³ 10000A/16kA	10
	DX³ 25kA	10
	DX³ 36kA	10
	DX³ 50kA	10
	DPX³ 160A 16kA	10
	DPX³ 160A 25kA	10
	DPX³ 160A 36kA	10
	DPX³ 160A 50kA	10
	DPX³ 250A 25kA	10
	DPX³ 250A 36kA	10
	DPX³ 250A 70kA	10
Fuse gG / aM	63A	16
	80A	16
	100A	16
	125A	16

Packaged volume:

. Packaging: per 5
. Volume: 1.6 dm³

Average unit weight:

162g

6. COMPLIANCE AND APPROVALS

In accordance with standards:

. IEC/EN 60947-3.
. IEC/EN 60669-2-4.

Usage in special conditions:

. Compliant with appendix Q category F of standard IEC/EN 60947-1.

6. COMPLIANCE AND APPROVALS *(continued)*

Respect for the environment – Compliance with European Union Directives:

. Compliance with Directive 2002/95/EC of 27/01/03 known as "RoHS" which provides for a restriction on the use of dangerous substances such as lead, mercury, cadmium, hexavalent chromium and polybrominated biphenyl (PBB) and polybrominated diphenyl ether (PBDE) brominated flame retardants from 1st July 2006.

. Compliance with the Directive 91/338/EEC of 18/06/91 and decree 94-647 of 27/07/04.

Plastic materials:

. Halogen free plastic materials.

. Labelling of parts compliant with ISO 11469 and ISO 1043.

Packaging:

. Design and manufacture of packaging compliant with decree 98-638 of 20/07/98 and Directive 94/62/EC.

Approvals obtained:

. See list of approvals available.

7. AUXILIARIES AND ACCESSORIES

Wiring accessories:

. Fork-type supply busbars (Cat N°: 4 049 56, 4 049 57, 4 049 59, 4 049 63, 4 049 64, 4 049 36).

. Sealable screwcover (Cat N°: 4 063 04).

. Terminal for aluminium conductor gauge 50 mm² max for DX³-IS ≤ 63A (Cat N°: 4 063 10).

. Insulating shield (Cat N°: 4 063 05).

Signalling auxiliaries (No busbar):

. Auxiliary contact (0.5 module, Cat N°: 4 062 58).

. Double Auxiliary contact (1 module, Cat N°: 4 062 66).

Installation software:

. XL PRO³.