Small Entrance Panel Touch

374005

User and installation manual



RA00190AA-01/22-PC

Small Entrance Panel Touch

User and installation manual

Contents

General information 4
- **Warnings and recommendations** 4

Warnings and consumer rights 4

Fundamental concepts 5
- **Naming of the devices** 5
- **Community** 5
- **Call addressing procedures** 6
  - Call using the address in the Community 6
  - Call using the Alias (alphanumeric code) 7
  - Call using the Phonebook 7
  - CCTV cameras 7
  - Fire linkage 7
  - Address book 7

Front and rear view 8

Dimensional data and installation heights 11

Installation 12

Uninstall 16

Example diagrams 17
- **Ethernet connection** 18
- **Fiber optic riser connection (case of higher bandwidth demand)** 19
- **Available functions** 20

Use of the device 21
- **Introduction** 21

Use of the device 22
- **Home page** 22

Functions 23
- **Call a IU** 23
  - Answering machine 28
  - Messages and advertising 29
- **Call a GS** 30
- **Accesses** 31
  - Access using Access Code 31
  - Access using badge or card 33
  - Access using Face recognition 34

Configurations using the device (Settings) 35
- **Address** 37
- **Setting** 38
- **Date and time** 39
- **Access code** 40
- **Guard station** 41
- **Door lock** 42
- **Display & Volume** 43
- **Ringtone** 44
- **Face settings** 45
- **Background** 47
- **Information** 48
- **Language** 49
- **User guide** 50

General information

Warnings and recommendations

It is important to read this manual carefully before proceeding with the installation.
The warranty becomes automatically void in case of negligence, improper use, tampering by unauthorised personnel.
The Entrance Panel must not be exposed to water drops or splashes; it must be used only on IP DES digital systems.

Warnings and consumer rights

	Read carefully before use and keep for future reference.
	Touching the units with wet hands is forbidden. Using liquid cleaners or aerosols is forbidden. Blocking the ventilation openings is forbidden. Modifying the devices is forbidden. Removing protective parts from the devices is forbidden. Exposing the unit to water drops or splashes is forbidden. Installing the units near heat/cold sources or hot/cold air emission points is forbidden. Installing the units near heat/cold sources is forbidden. Installing the units near harmful gases and powders is forbidden. Fastening the units on unsuitable surfaces is forbidden.
	Danger of electrical shock.
	Risk of devices falling because the surface on which they are installed collapses or inappropriate installation. Switch the power supply OFF before any work on the system.
	Caution: Installation, configuration, starting-up and maintenance must be performed exclusively by qualified personnel. Check that the wall installation has been carried out correctly according to the installation instructions. Check that the unit installation complies with the standards in force. Connect the power supply wires as indicated. Use only the items indicated in the technical specifications for any system expansions.

Fundamental concepts

Naming of the devices

In this manual, for easy reading, the abbreviated device name is used as in the list:

– IU: Indoor Unit
– EP: Entrance Panel
– GS: Guard Station
– SD: Server DES
– SEP: Small Entrance Panel
– AB: Address book
– SW: Software Server DES

Community

The term Community means the housing complex reproduced in the project design made using the SW.
The structure in its maximum extension includes:

AREA ➔ BUILDING ➔ RISER ➔ FLOOR ➔ APARTMENT



Call addressing procedures

On the basis of data recorded in the system phonebook and the Community structure the calls can be made using various methods:

- call using the address in the Community;
- call using the Alias (alphanumeric code);
- call using the Phonebook.

Call using the address in the Community

To make this type of call you must know the address of the person being called, which depends on the community structure, for example:

- to call the IU highlighted in the diagram from the «A» EP, enter the corresponding address «**11010402**»;
- to call the IU highlighted in the diagram from the «B» EP, enter the corresponding address «**010402**», as the IU is positioned inside building 1 and therefore it is sufficient to type the Riser, Floor and Apartment number.

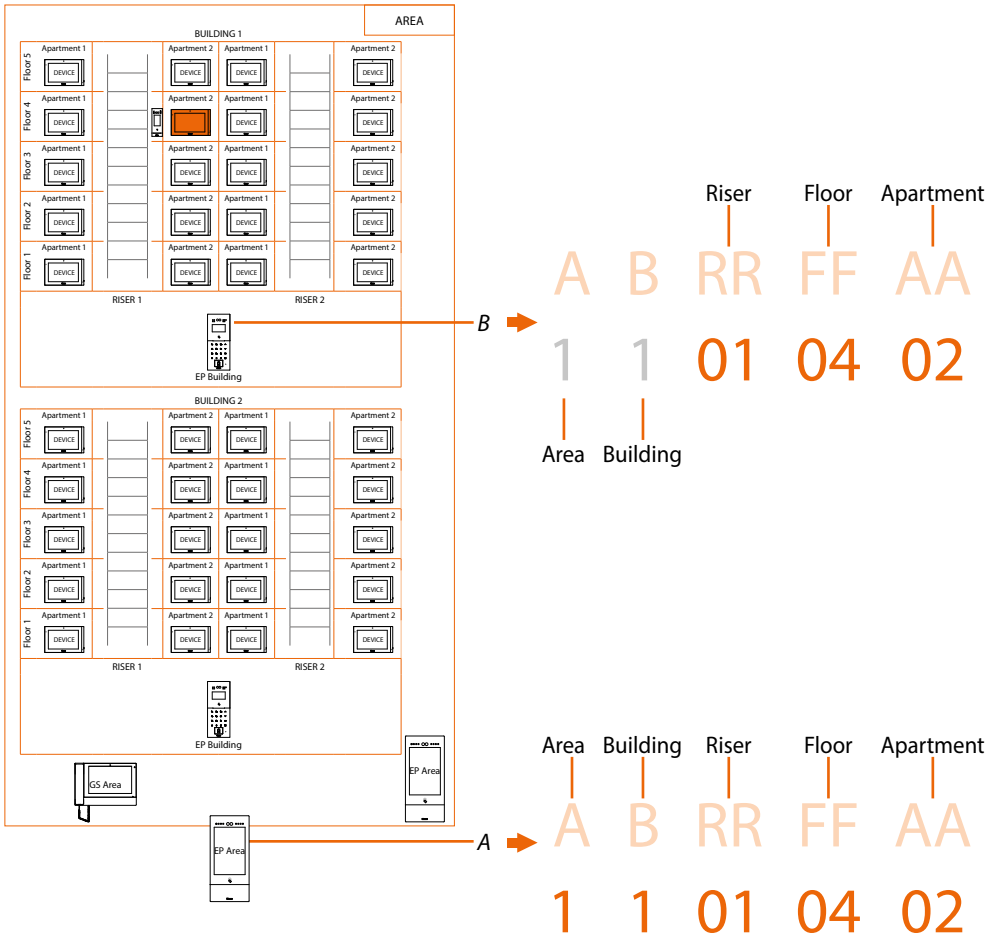

***Note**: during the configuration phase, the number of digits to be used for each call sector (Area/Building/Riser/Floor/Apartment) must be set.*
Example: I have to call an apartment inside building 2
– if there are from 1 to 9 buildings in the area, I must enter «2» (one digit used for the Building call sector);
– if there are more than 10 buildings in the area, I must enter «02» (two digits used for the Building call sector).

The system will automatically show the correct number of digits to type and which data to enter on the basis of the EP position you are calling from, for example Area (2 01 06 02) or Building (01 06 02)

System configuration (default)
Areas 9, Building 99, Riser 99, Floor 99, Apartment 99
It is possible to modify the limits using the SW (see SW manual for details)

Call using the Alias (alphanumeric code)

The alphanumeric code, by default, is the same address as in the Community but it is possible to replace it with an alias using the SW. For more details see the Software manual.

Example:

1 1 01 04 02 ➡ B12

Call using the Phonebook

In this way it is possible to use the phonebook key and select the contact to call or it is possible to make a call by typing the code (Alias), with the advantage that during typing the system will autocomplete the address; see the software Manual for more detail.

Example:

1 1 01 04 02 ➡ JOHN SMITH

CCTV cameras

CCTV cameras for passive video surveillance.

Fire linkage

It enables the door lock opening function in case of fire.
The Fire linkage function allows the automatic opening of EP door locks in the event of a fire.
The use of this function requires a clean contact in the GND FIRE LINKAGE input clamp from the fire fighting system.
It is necessary to enable the function in **Setting**

Address book

Phonebook, created using the SW, containing the addresses of all the system devices.

TIMES		
Function	**Default time**	**Customisation using SW**
Call time after which the video door entry answering machine* activates	30 seconds	not customisable
Duration of communication time	60 seconds	From 60 to 120 seconds
Unlock time	5 seconds	From 2 to 255 seconds
Screen saver	30 seconds	30 - 60 - 120 - 300 – 600 seconds

**setting the RINGTONE DURATION time on the IU at less than 30 seconds, the answering machine does not activate*

Front and rear view

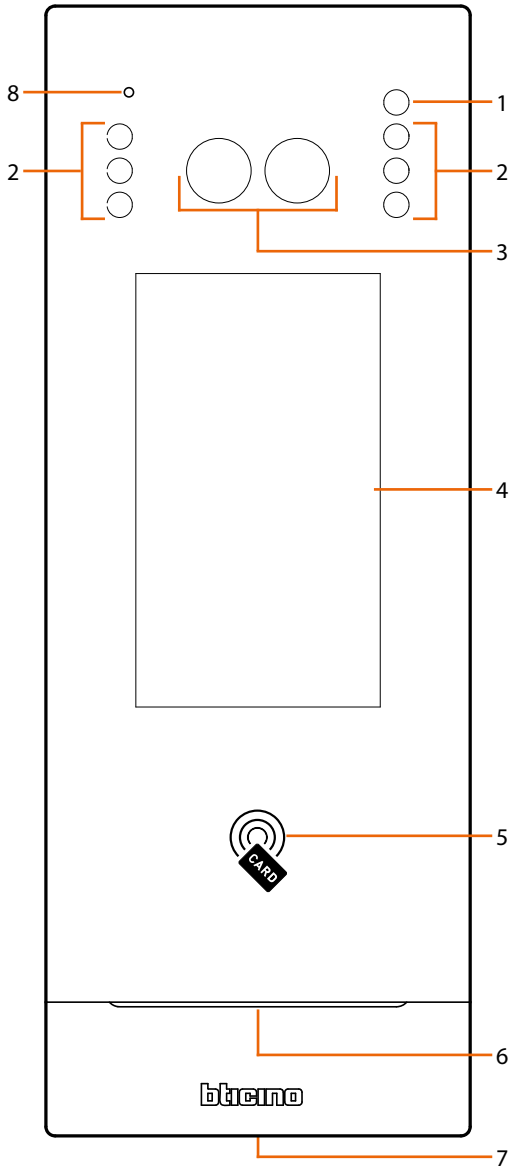

1. Light sensor
2. LED for the shooting field lighting
3. Camera
4. Display 4.3" (touch screen)
5. Badge reader for door lock opening
6. Loudspeaker
7. Locking screw
8. Microphone

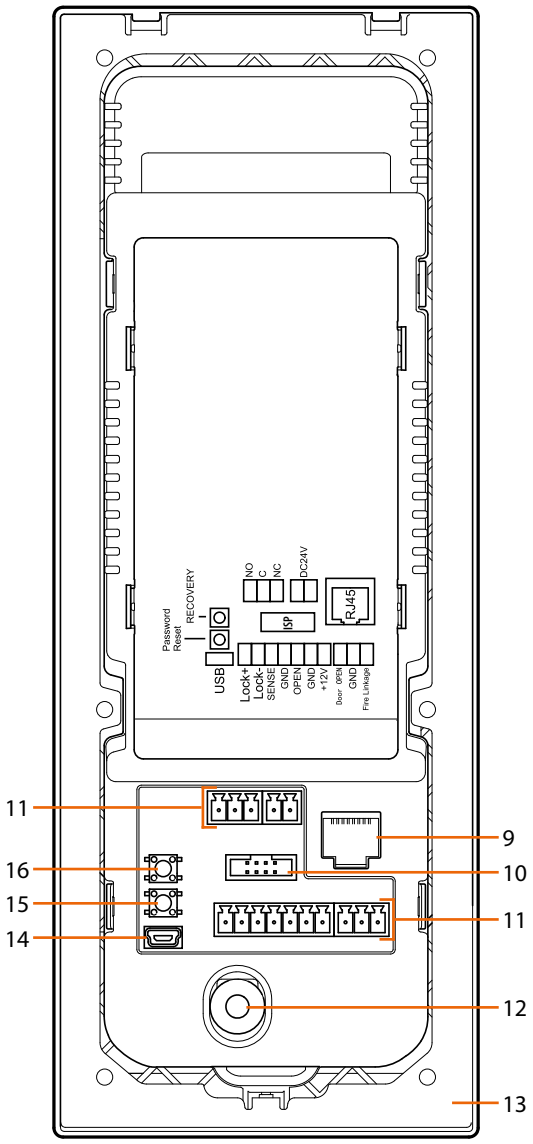

9. RJ45 Connector (*)
10. Not used
11. Connection clamp
12. Tamper switch
13. Mounting bracket
14. USB Connector (not used)
15. Reset to the factory settings push button
16. Not used

(*) This device does not support standard POE power supplies, but only POE power supplies identified with item no. 375002.
Connect the cat5/5e/6 FTP or cat5/5e/6 UTP cable with ferrite supplied to the connector

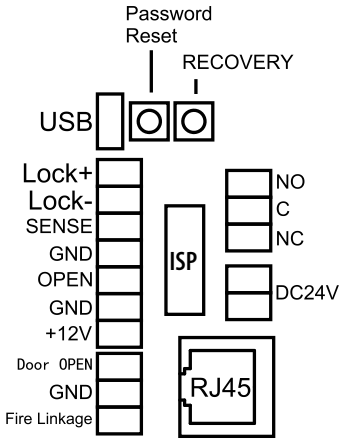

Connection clamps	
LOCK+	electric door lock connection and control (12V - 4A impulsive on 3 Ohm maximum)
LOCK-	
SENSE	door lock status signal input (dry contact)
GND – +12V	access control devices power supply
OPEN	third party access control signal input for door lock opening (+12Vdc pulse)
GND	system common ground terminal for third party connection
Door OPEN – GND	local door lock release pushbutton connection
FIRE Linkage – GND	local door lock release pushbutton connection for firealarm system
NO	interlocked contact
C	
NC	
DC24V	additional power supply clamps (not polarized)

It is possible to display some wiring diagram examples in the Example diagrams/functions section

Dimensional data and installation heights

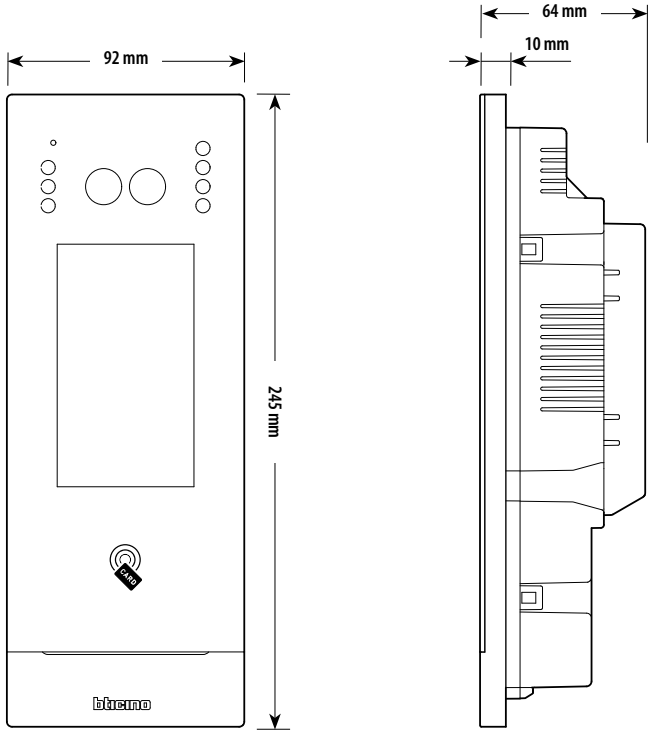

To ensure proper operation, the Fingerprint Reader must be installed in a location protected from rain.

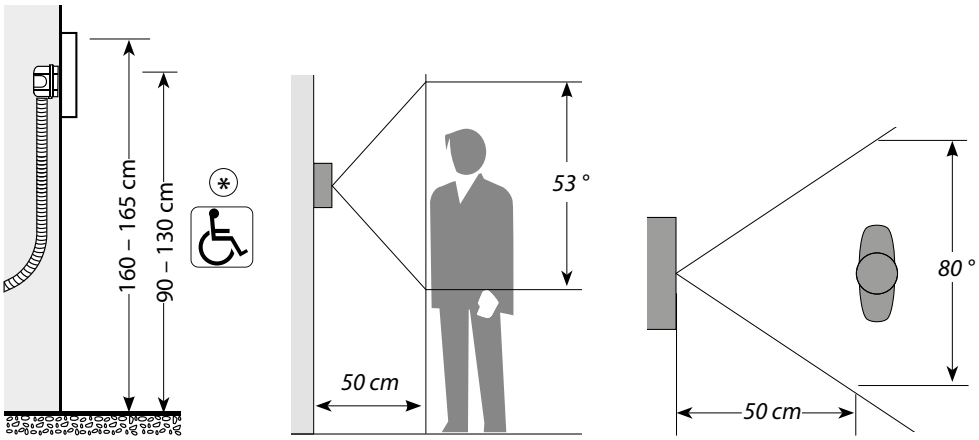

(*) Recommended height, unless different regulations are specified.

Installation

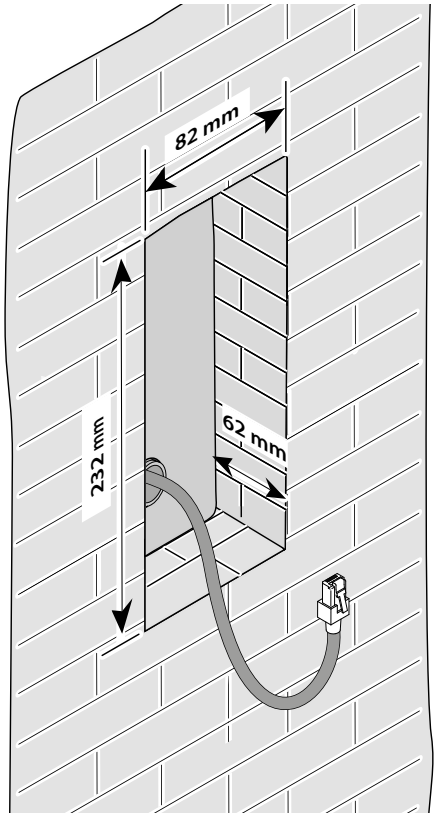

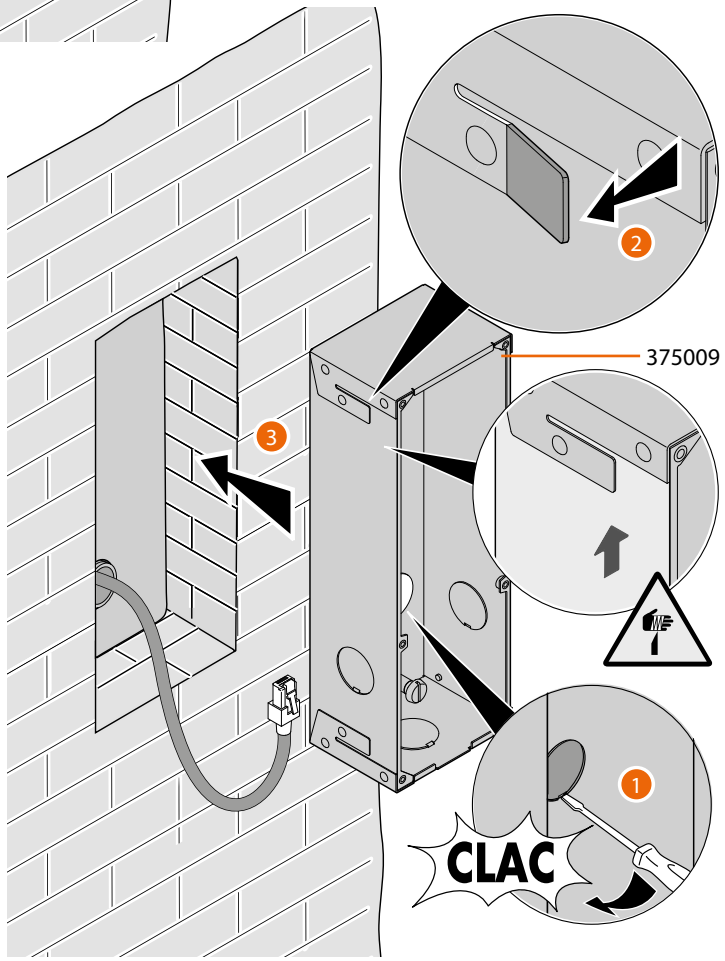

***Attention**: the RJ45 cable must be at least 200 mm long*

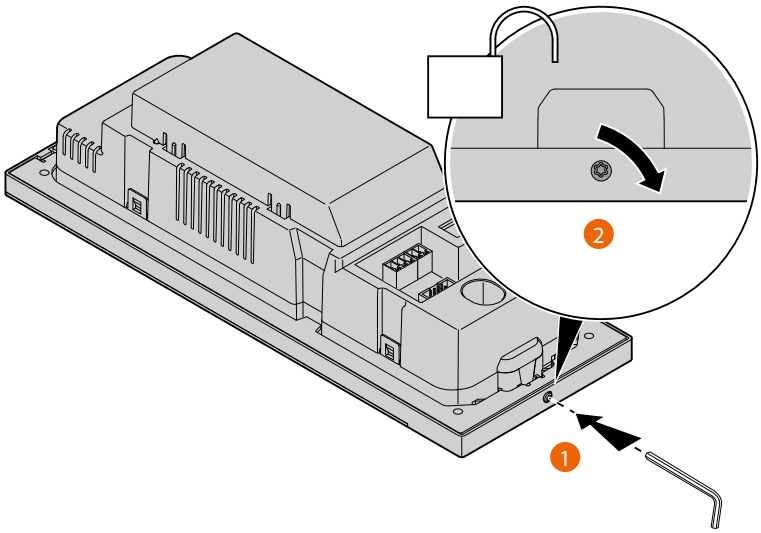
2
1

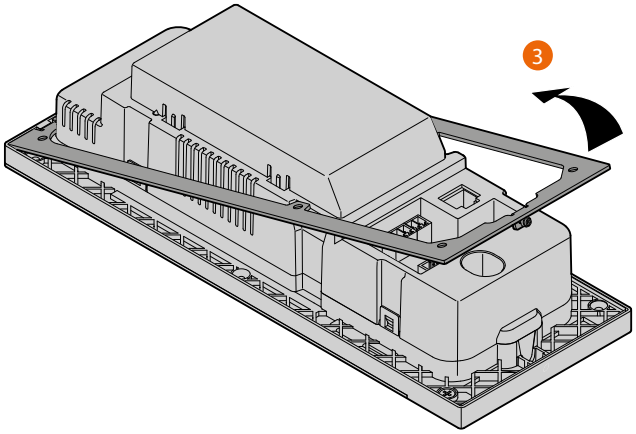
3

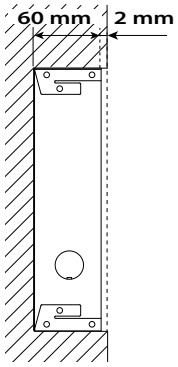
60 mm
2 mm

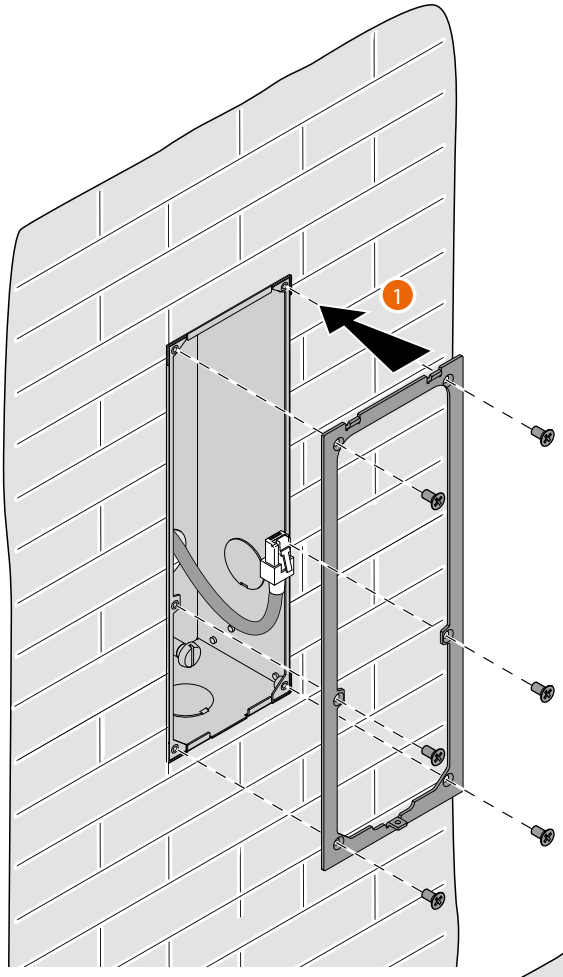
1

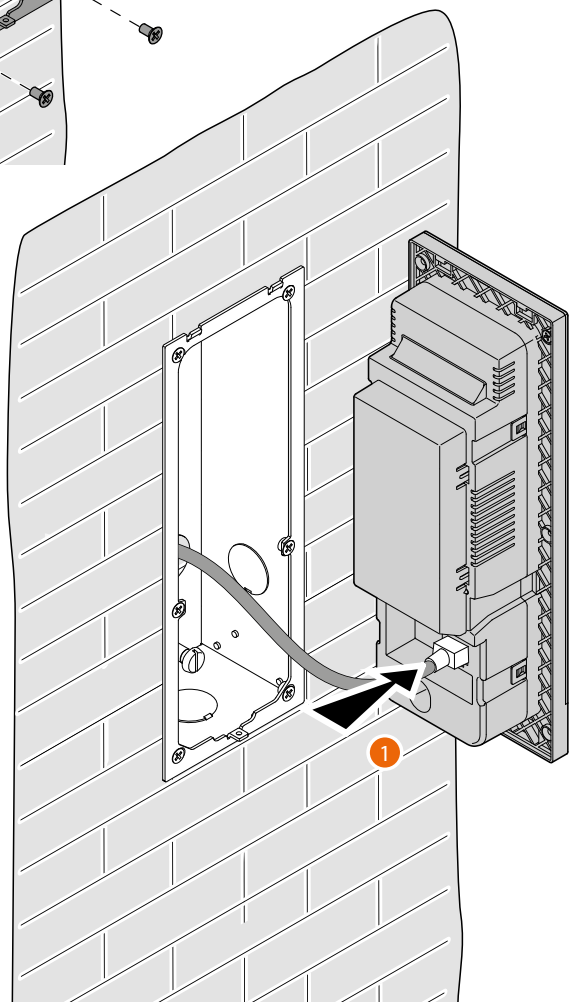
1

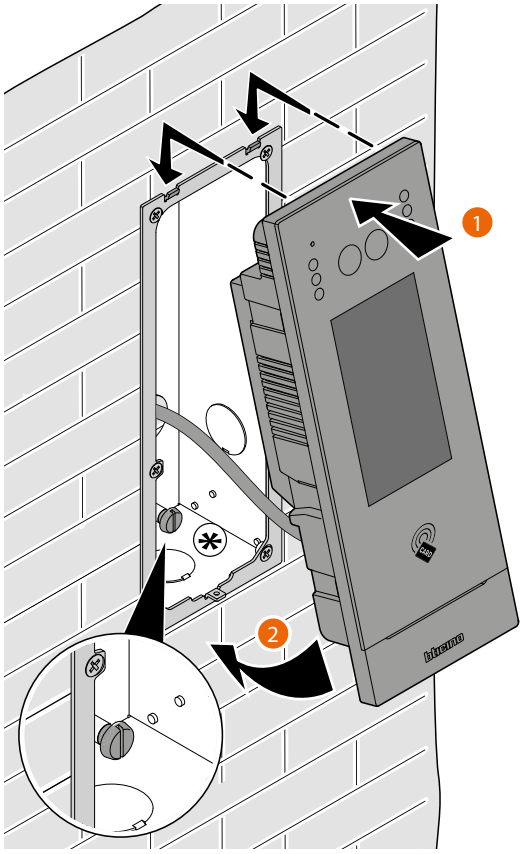

(*) Adjust the tamper screw so that it presses the tamper switch of the device and activates the anti-theft function in case of removal sending an alarm to the GS.

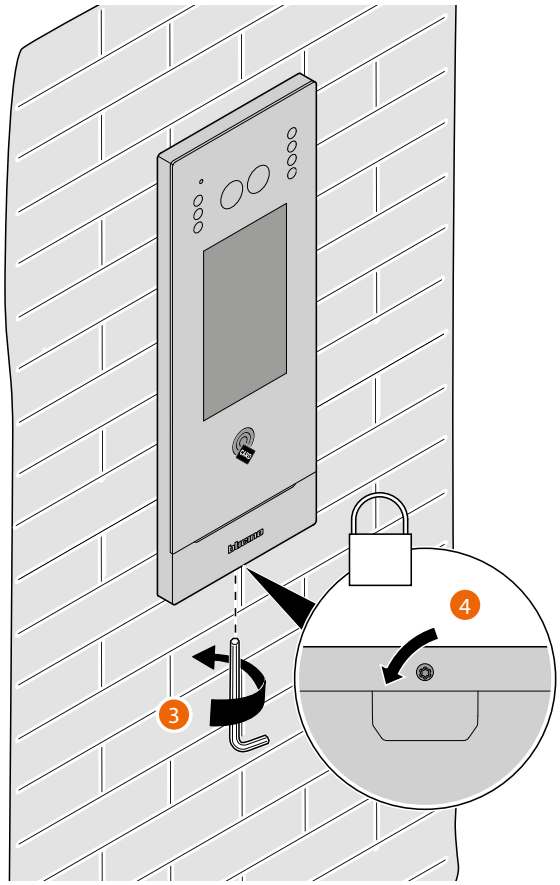

Uninstall

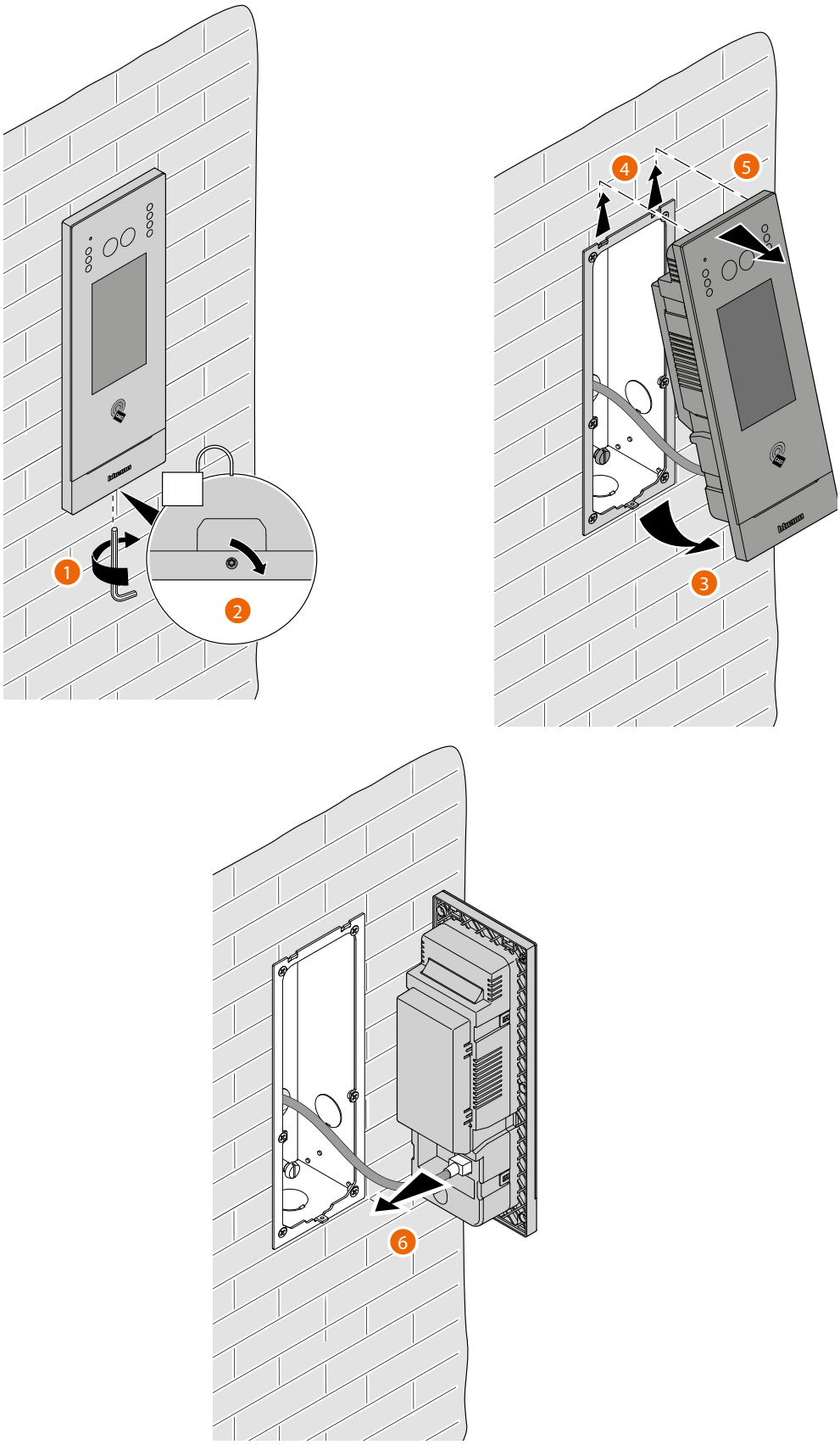

Example diagrams

CABLES LEGEND	LAN PoE BTicino	LAN Ethernet	Copper cables	2 x Copper cables

It is possible to use two different types of connection according to installation situation:

A - Diagram with power supply by BTicino PoE Switch

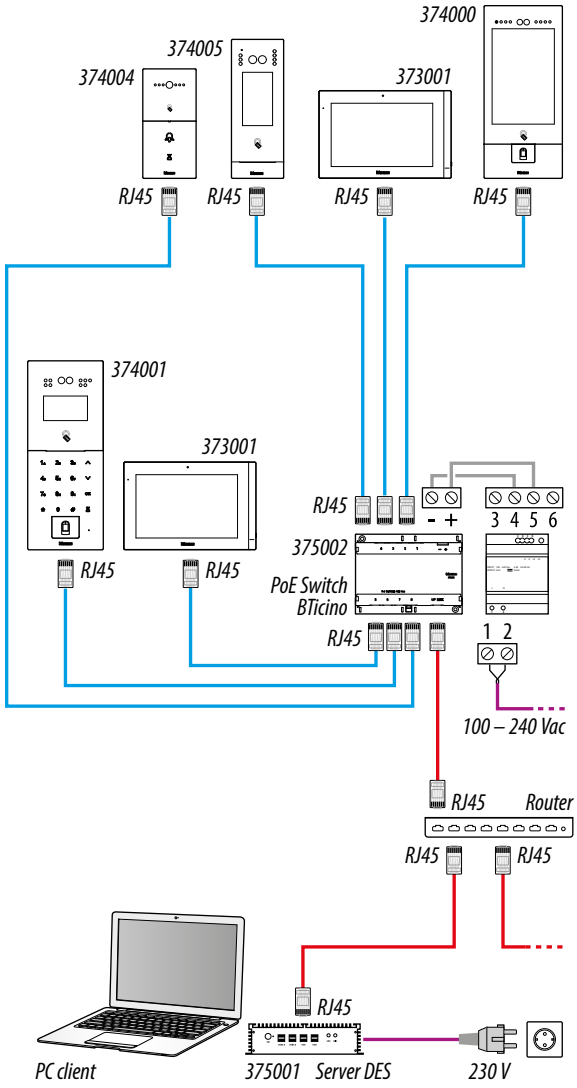

B - Diagram with local power supply

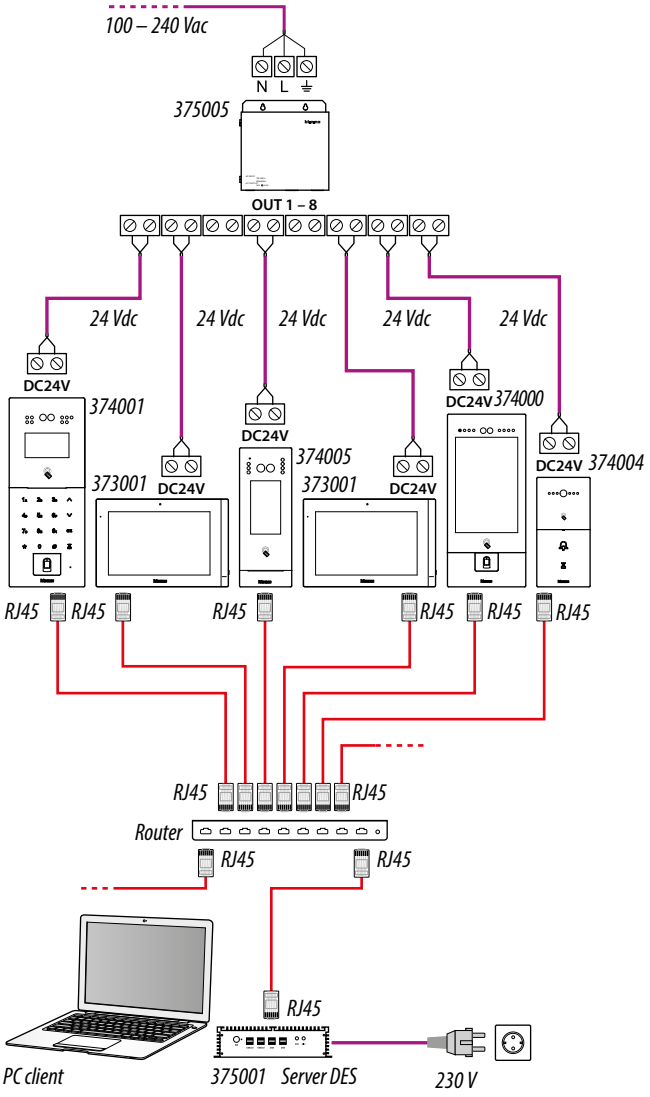

***Attention**: this device does not support standard POE power supplies, but only POE power supplies identifiedwith 375002. Connect the cat5/5e/6 FTP or cat5/5e/6 UTP cable with ferrite supplied to the connector.*

***Attention**: do not directly connect PoE ports to an unsuitable network interface, such as a device powered by a different voltage. Connect the UP LINK port to a suitable port, never to a PoE port.*

***Note**: maximum length of every LAN permanent link line = 90 m.*

Ethernet connection

CABLES LEGEND	LAN PoE Standard	LAN PoE BTicino	LAN Ethernet	Copper cables	2 x Copper cables

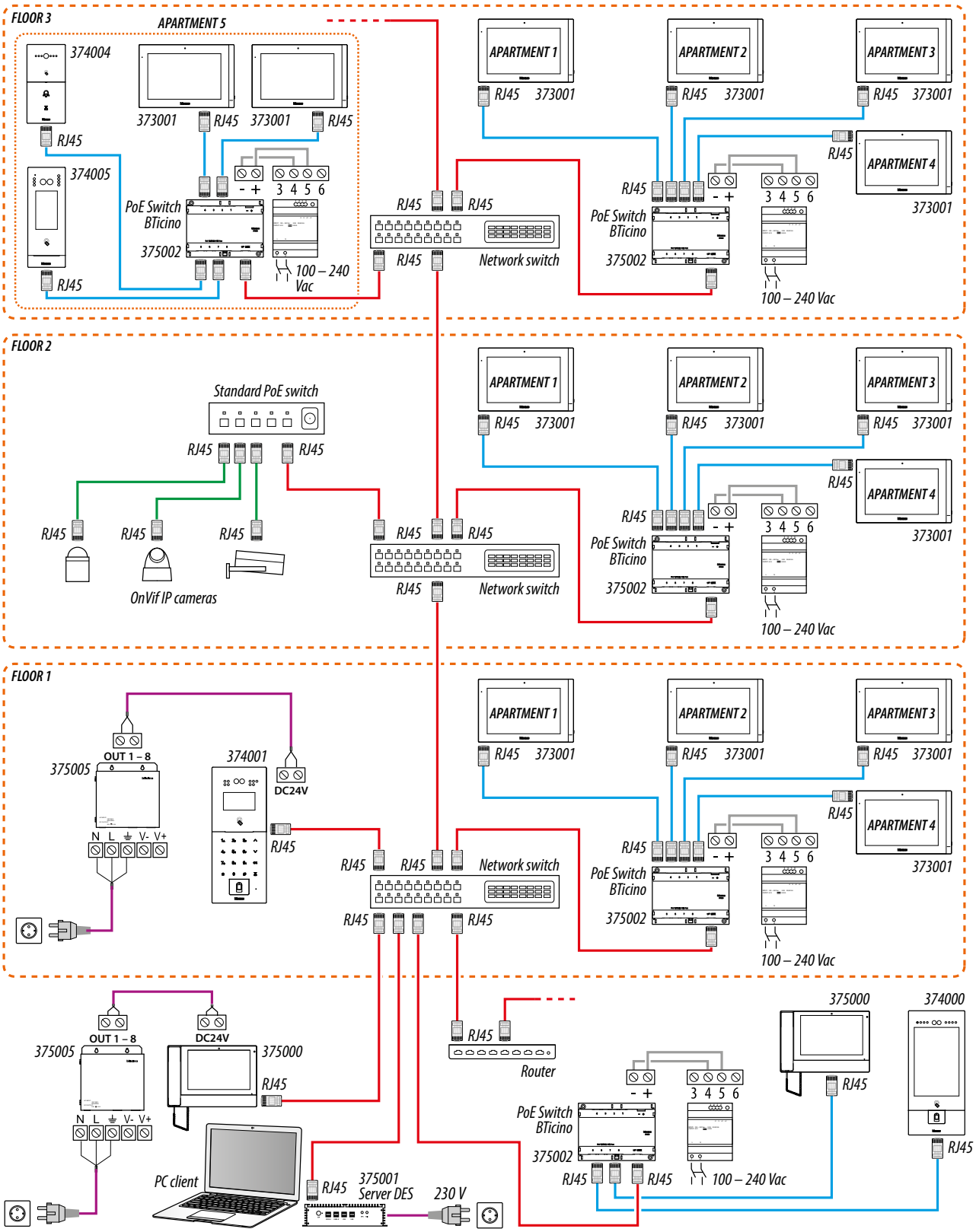

***Attention**: do not directly connect PoE ports to an unsuitable network interface, such as a device powered by a different voltage. Connect the UP LINK port to a suitable port, never to a PoE port.*

***Note**: to connect the devices it is possible to use both types of wiring (diagram A or diagram B) or even mixed ones.*

Fiber optic riser connection (case of higher bandwidth demand)

CABLES LEGEND	LAN PoE Standard	LAN PoE BTicino	LAN Ethernet	Optical fiber	Copper cables	2 x Copper cables

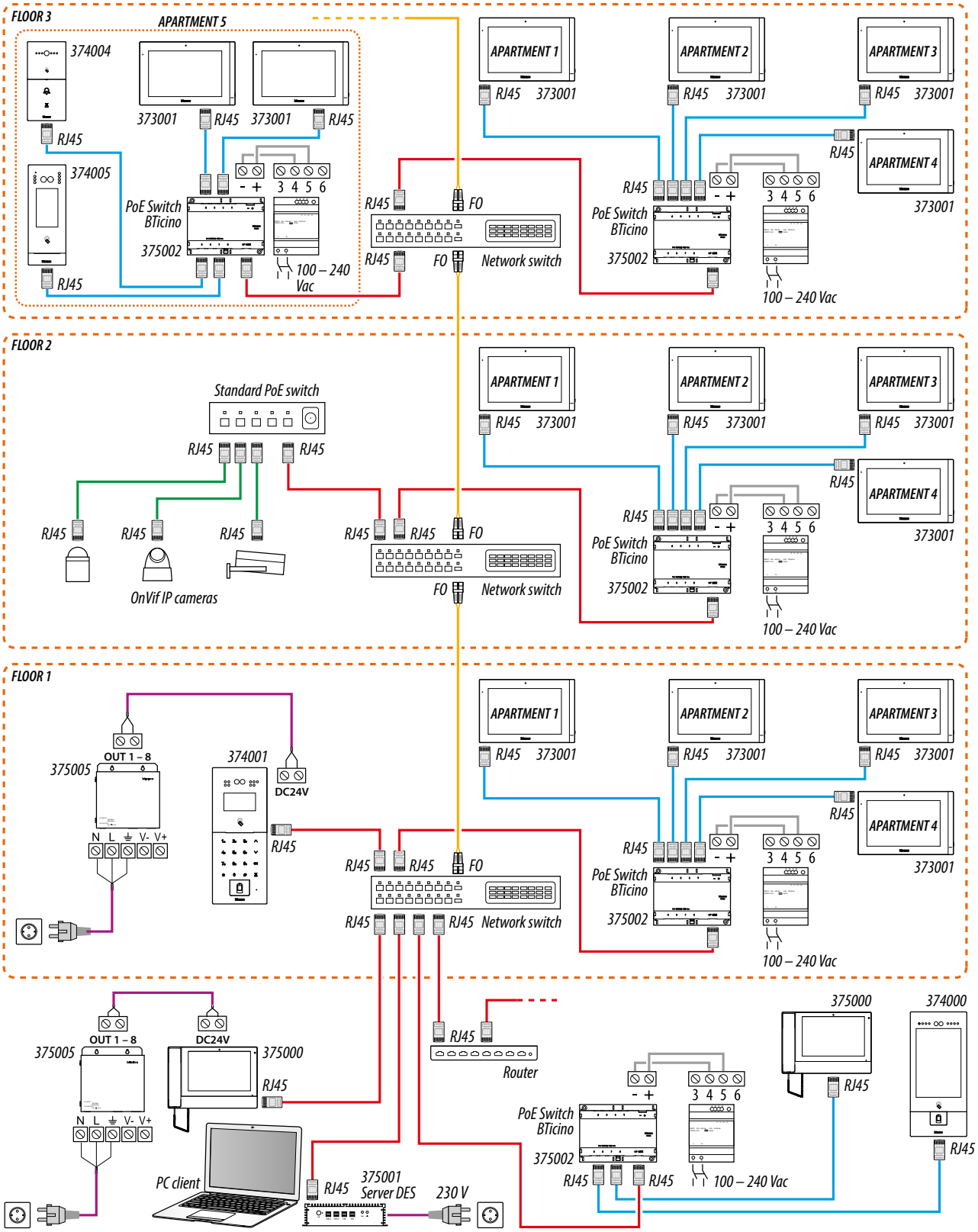

Attention: *do not directly connect PoE ports to an unsuitable network interface, such as a device powered by a different voltage. Connect the UP LINK port to a suitable port, never to a PoE port.*

Note: *to connect the devices it is possible to use both types of wiring (diagram A or diagram B) or even mixed ones.*

Available functions

CABLES LEGEND	LAN PoE BTicino	LAN Ethernet	Copper cables	2 x Copper cables

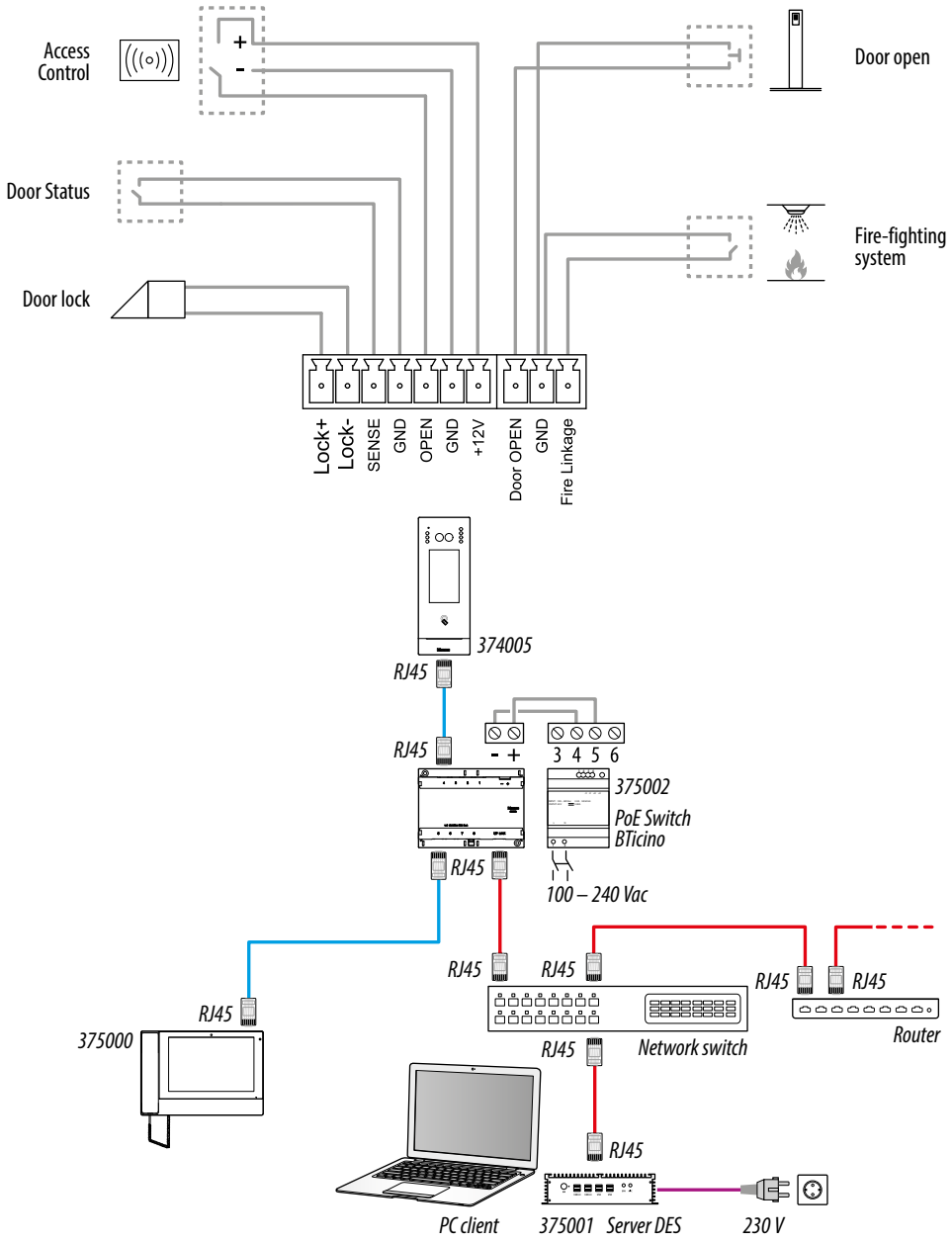

***Attention**: do not directly connect PoE ports to an unsuitable network interface, such as a device powered by a different voltage. Connect the UP LINK port to a suitable port, never to a PoE port.*

***Note**: to connect the devices it is possible to use both types of wiring (diagram A or diagram B) or even mixed ones.*

Use of the device

Introduction

After the installation and connection of the device, it is necessary to configure it and create the Community structure. For details see Server DES Software manual.



Step 01 Community VLAN network creation

Step 02 Community structure definition

Step 03 Community structure creation

Step 04 Device MAC address registration

Step 05 Forwarding of the phonebook to the SD

Step 06 Installation of the devices

Step 07 Activation of the devices

Step 08 System test

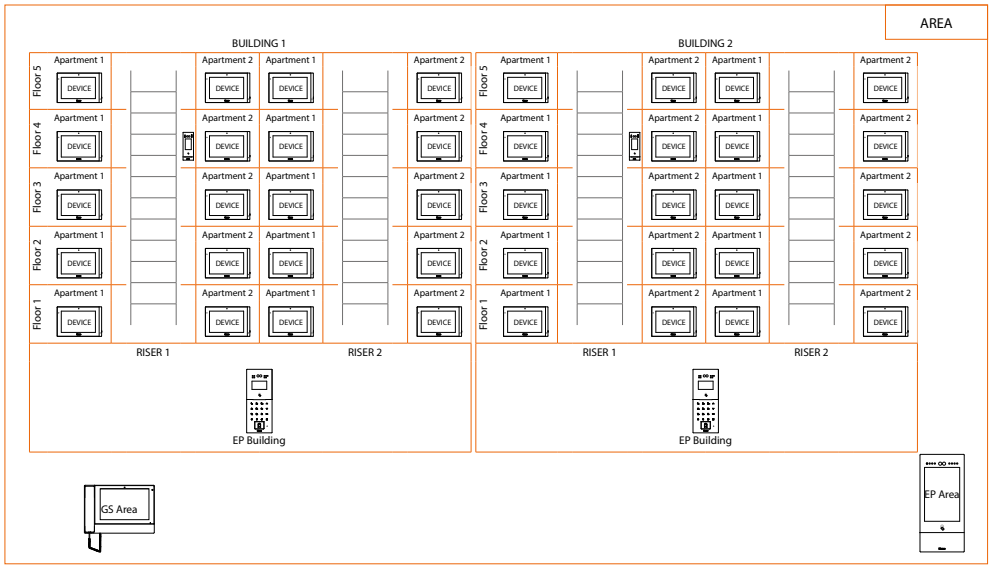

Use of the device

Home page

This page may show different content according to the configuration and systems connected to the device.
The Home Page, with all the functions enabled, is shown below.



A *Current time*

B *Function keys*

	Call a IU
	Call a GS
	Access using Face recognition
	Access using Code
	Settings

1. Scroll to display the complete menu bar

Functions



Call a IU

It is possible to call an IU in different ways:

- call using the address in the Community;
- call using the Alias (alphanumeric code);
- call using the Phonebook.

The call mode depends on how the community has been configured using the SW. For details see Fundamental concepts

If the device has been positioned in the structure at Apartment level, when the Guest call key is pressed, the call is directly sent to the IU.

If the device has been positioned at a higher level (e.g. building, riser, etc.), the IU can be called in different ways:

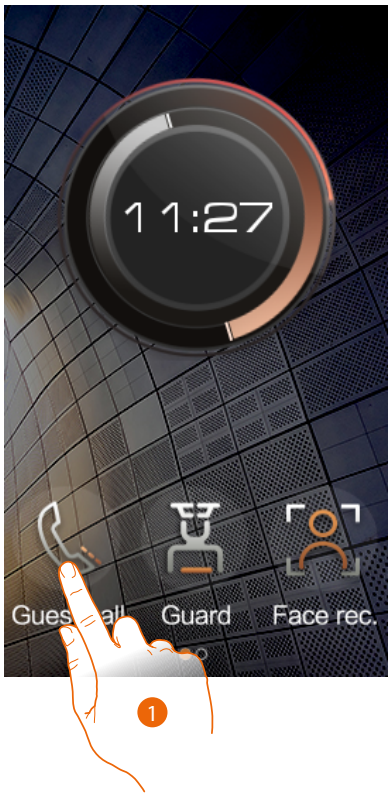

1. Touch to select the function

Call using the address in the Community



Call using the Alias (alphanumeric code)

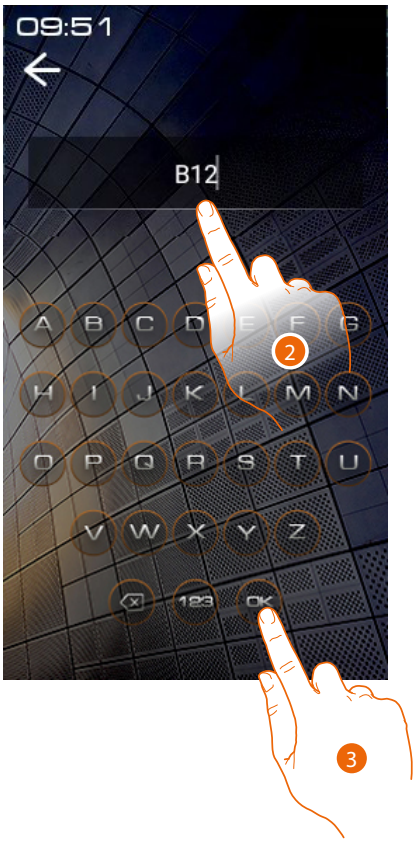

A Delete typing

B Change the type of keypad (numbers/letters)

C Send a call

2. Enter the address in the IU Community, the device helps you by showing the fields to be entered (e.g. 1 01 04 02)
3. Touch to send the call

2. Enter the alphanumeric code created using the DES Server software (e.g. B12)
3. Touch to send the call

***Note**: in the alphanumeric mode, the default code corresponds to the address in the Community as long as the Server DES software has not altered it in the AB*

Call using the Phonebook

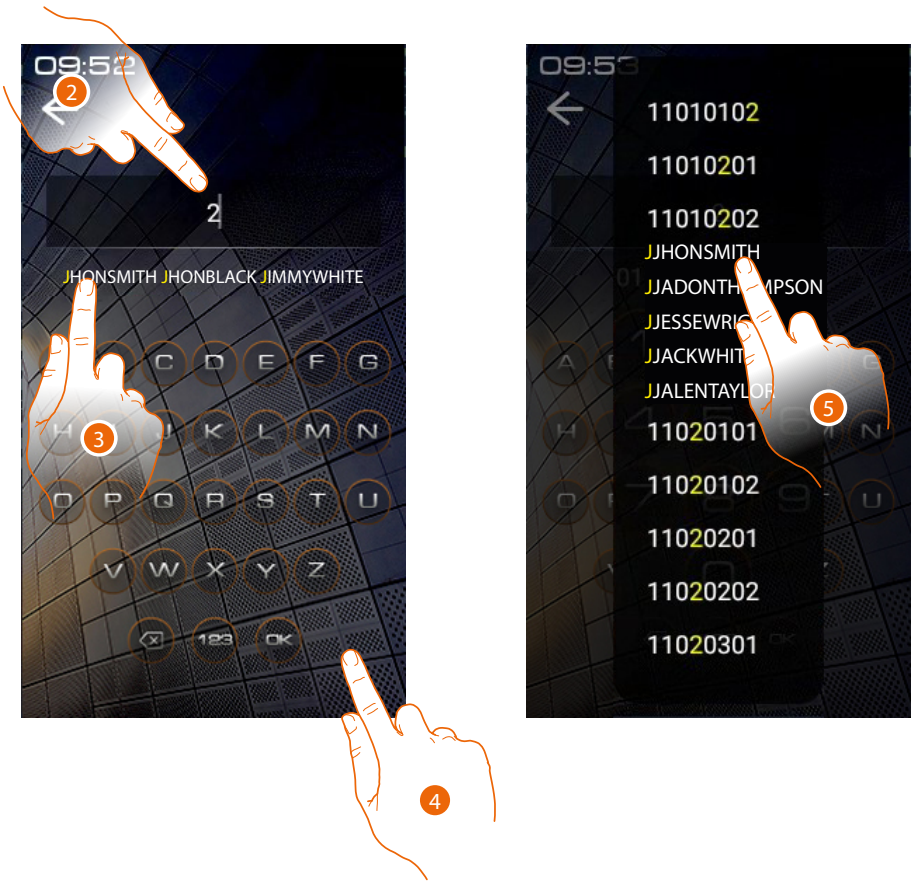

2. Enter the Alias saved in the AB (e.g. JOHNSMITH) directly.
   In this mode autocompletion is active
3. Touch the suggested contact to send the call
4. Touch to open the phonebook containing the contacts you can call.
   E.g. a Building EP will display only its building contacts.
5. Touch the code to send the call



A Call duration

*B Address in the IU Community**

***Note**: the caller display depends on how the community has been configured using the software. For details see Fundamental concepts*



6. Touch to end the call

When the IU does not answer a message can be recorded (see **Answering machine**)

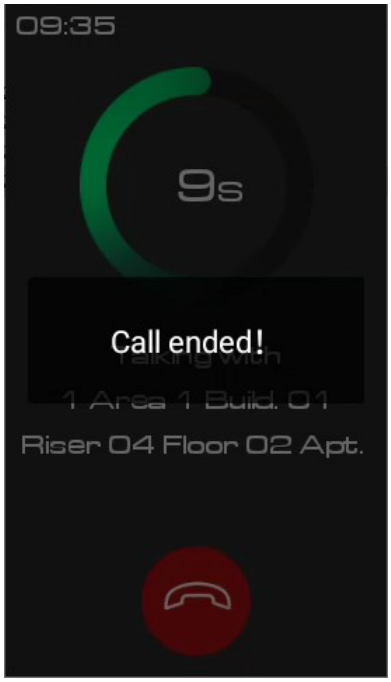

A message indicates that the call is ended

Answering machine

If the IU does not answer within 30 seconds, it is possible to leave a photo with a voicemail.

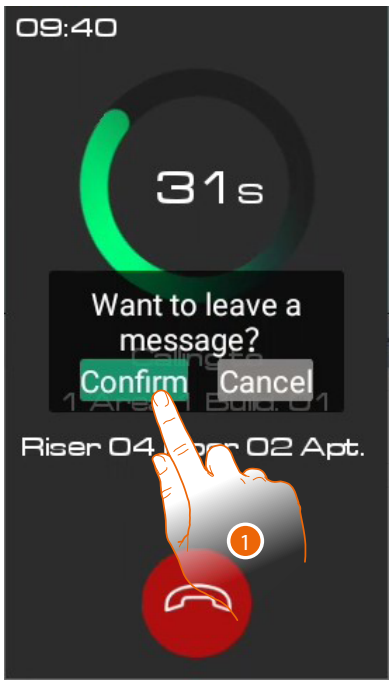

1. Touch to record a photo message

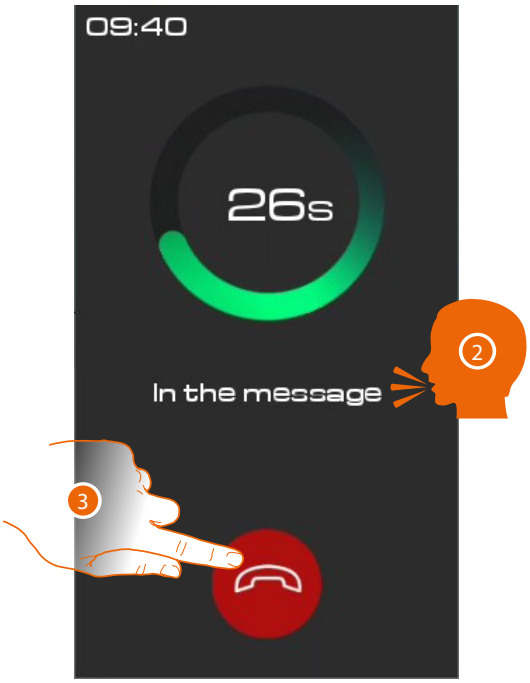

2. You have 30 seconds to leave a message.
   The IU will receive your image and the voice messages
3. Touch to end

Messages and advertising

When messages are sent to the community via SW, the device displays them in two ways:
– during a call (before the IU answers)
– when the screen saver is activated.

Community message	messages coming from the Facility manager about the Community
Emergency notification	emergency messages, coming from the Facility manager

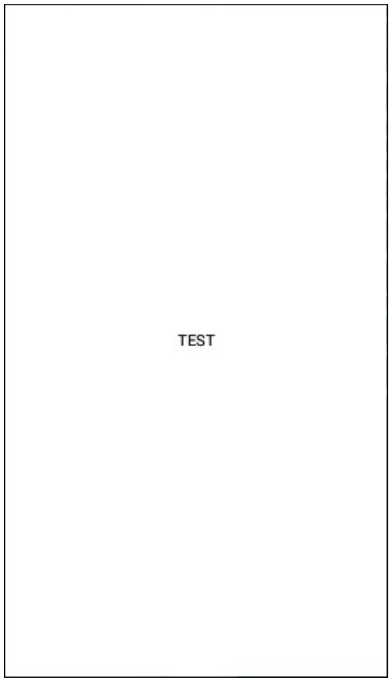

Messages displayed as screen saver



Call a GS

This function allows to call the reference GS set in the Settings/Guard station section



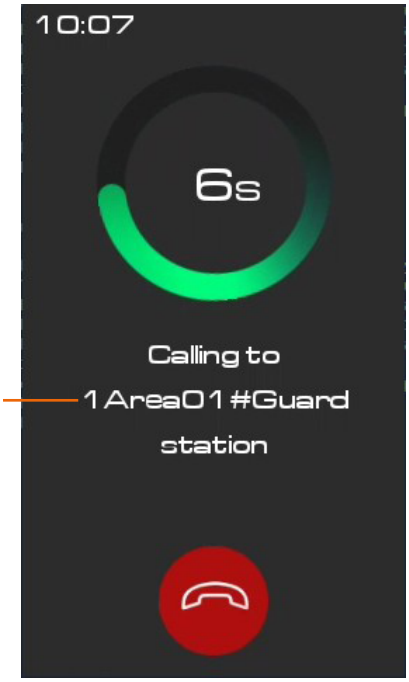

A

1. Touch to select the function

*A GS address**

***Note**: the caller display depends on how the community has been configured using the software. For details see Fundamental concepts*

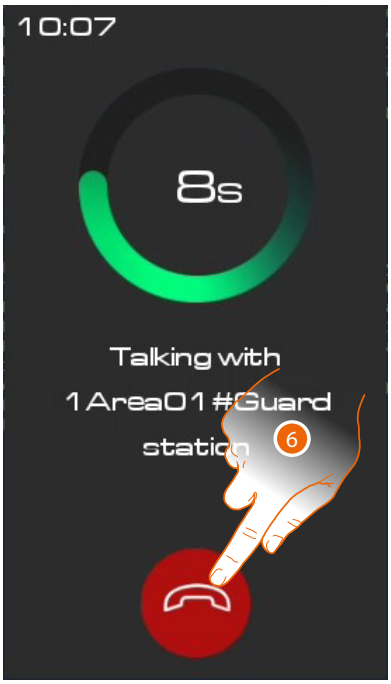

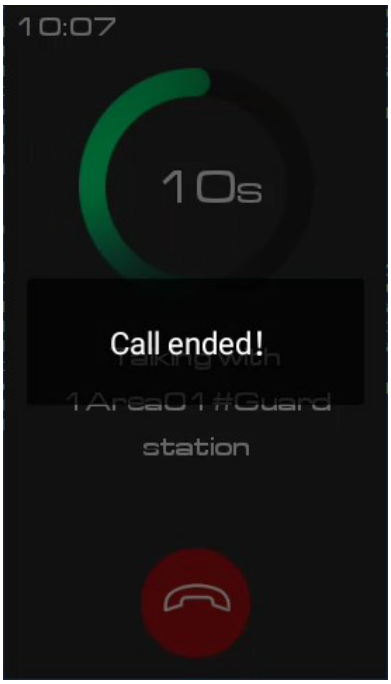

2. Touch to end the call

A message indicates that the call is ended

Accesses

It is possible to access the building in different ways:

	Access code	Access by entering a local code, an apartment personal code* or a panic code
	Key card	Access using a badge or card configured with SW
	Face recognition	Access by face recognition. Need to record the face using SW (only for item 374000)

**Correct operation requires the configuration of the code from the IU and a resident associated with the apartment in the SW (see SW Community/Person profile management)*



Access using Access Code

Using this function it is possible to access the building by typing an Access code.
The Access Code is set in the Installation\Access code\Local section



1. Scroll to display the function to select
2. Touch to select the function

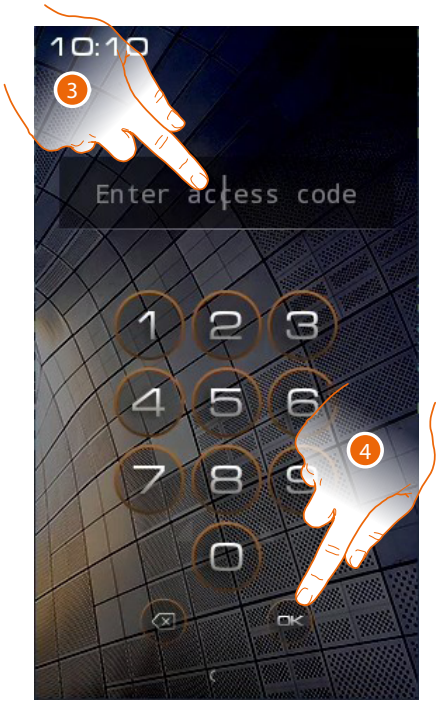

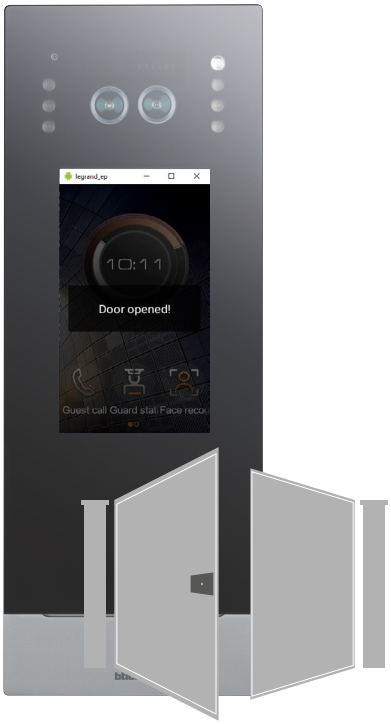

3. Enter the local access code (default 111111) or the personal access code or panic code.

***Note**: for safety reasons, modify the code.*

4. Touch to confirm

Beeps and visual warnings will confirm that the code has been recognised and the door lock will open.

Personal access code opens the last EP of my community, i.e. the EP closest to the apartment, chosen from those to which I have access.
Example: if they are enabled to all the accesses (complete Area/Building/Riser/Floor/Apartment structure) I open the Apartment EP.
This code does not work on community/area/building EPs
Panic access code: opens the door and at the same time sends an alarm message to the guard station.
Example: if a criminal forces me to forcibly open the door
The local access code opens community EPs, with the exception of apartment SEPs and EPs

***Note**: for safety reasons, modify the code.*

***Note**: to activate the code, there must be a resident associated with the apartment in the SW (see SW manual)*

Access using badge or card

Using this function you can access the building using a badge or a card.
To use this function, the badge or card must be saved in the system via SW.



1. Move the badge or card on the reader

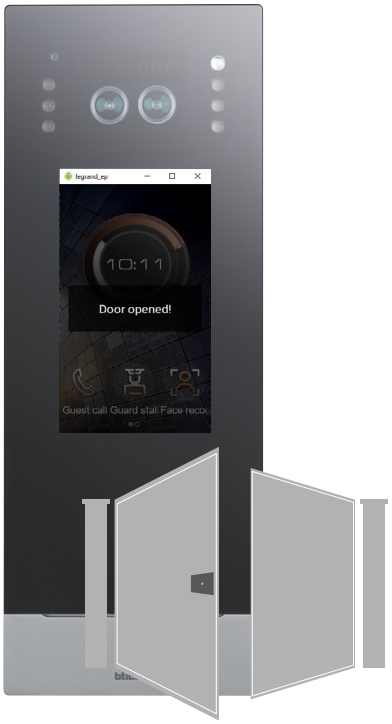

Beeps will confirm that the badge/card has been recognised and the door lock will open.



Access using Face recognition

Using this function, the EP camera will recognise your face and you can enter the building automatically without entering a code.
To use this function, your face must be saved in the system via SW.

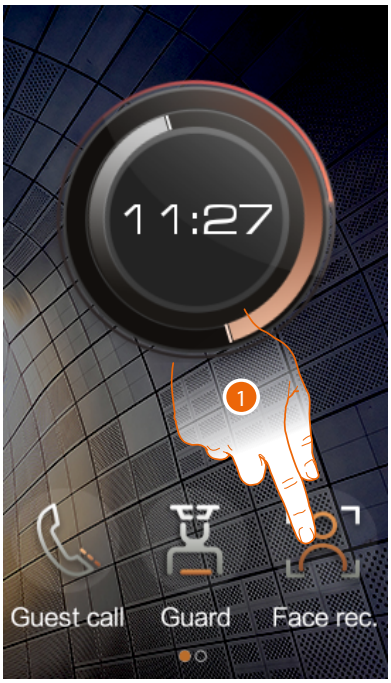

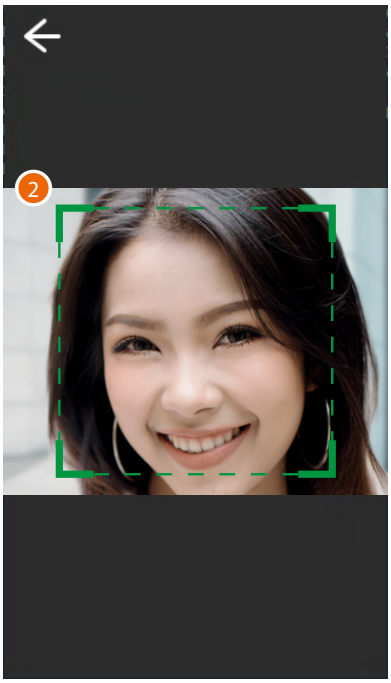

If the proximity sensor is active the function will activate automatically, otherwise:

1. Touch to select the function
2. Position yourself so that the camera can frame your face and the system activates the recognition process.

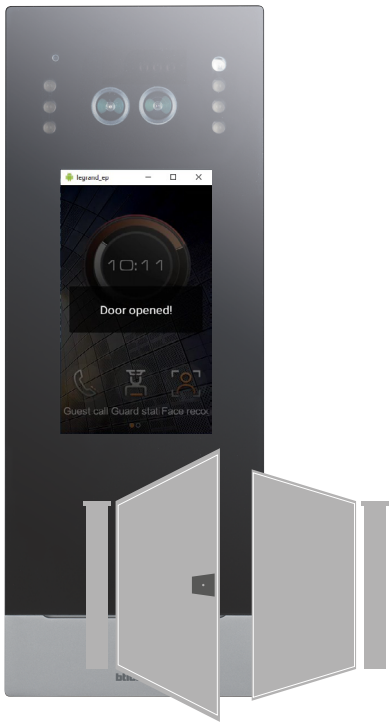

Beeps will confirm that the face has been recognised and the door lock will open.

Configurations using the device (Settings)

In this section, it is possible to perform a wide range of configurations that will enable you to make the most of your EP.
Access to this section is protected by a password which can be set by the SW

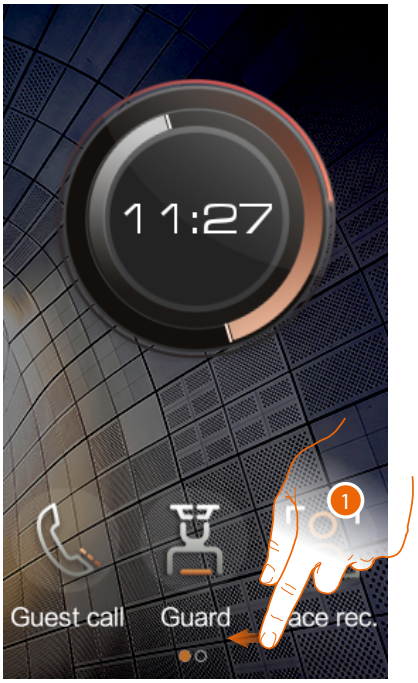

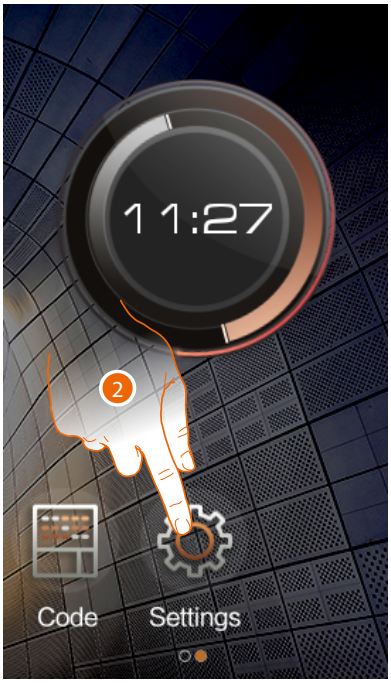

1. Scroll to display the complete menu bar
2. Touch to access the Settings section

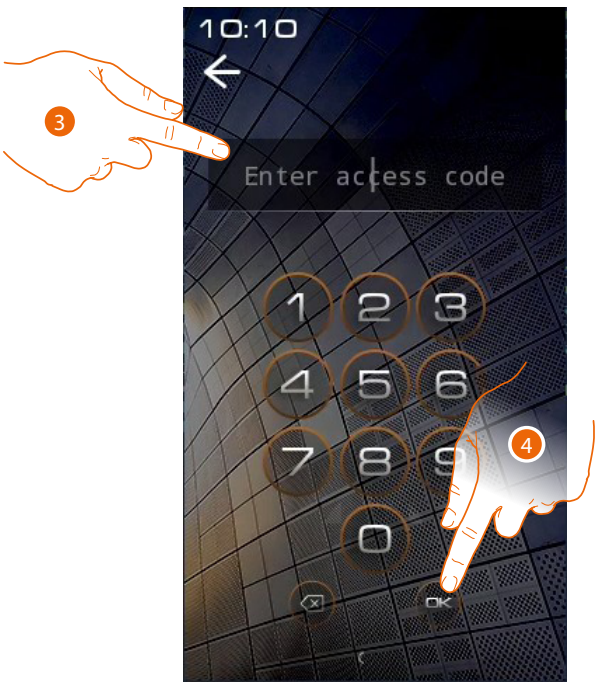

3. Enter the system code to access the configuration section (default 2000)

***Note**: for safety reasons, modify the code.*

4. Touch to confirm

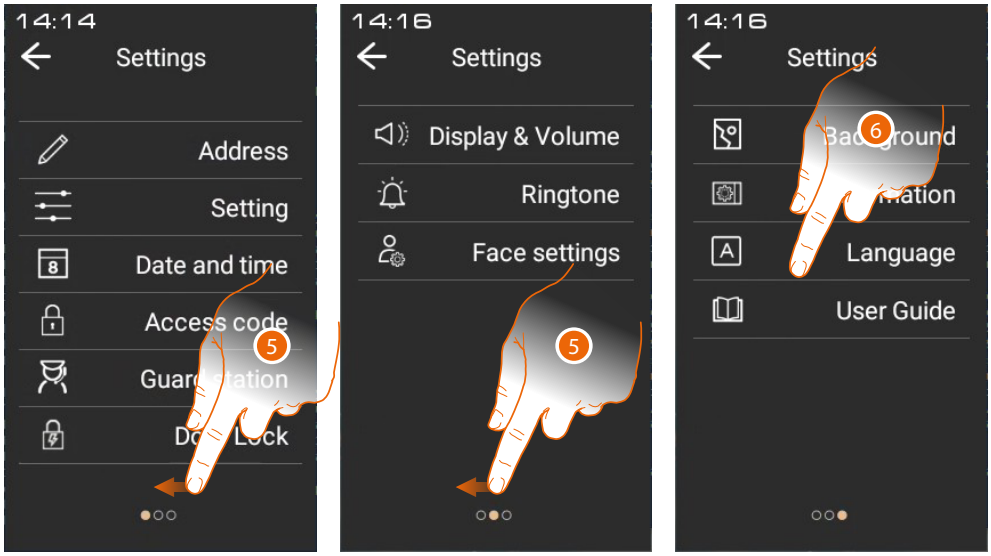

5. Scroll to display all the functions
6. Touch the icon for the desired configuration, choosing among:

	Address	It displays various device parameters and performs the reset command
	Setting	It enables different functions
	Date and time	It sets the date and time
	Access code	It sets the access code in the Setting menu and the local access code to open the gate
	Guard station	It sets the EP reference GS
	Door lock	It sets different parameters of the EP door lock
	Display & Volume	It sets some display parameters and the ringtone volume
	Ringtone	It displays the ringtones
	Face settings	It sets the parameters for the Face Recognition
	Background	It sets the interface background
	Information	Visualizza varie informazioni sul dispositivo
	Language	imposta la lingua dell'interfaccia
	User guide	It displays the QR code to download the manual

Address

In this section, it is possible to display the different device parameters.
It is also possible to restore the factory settings of the device.

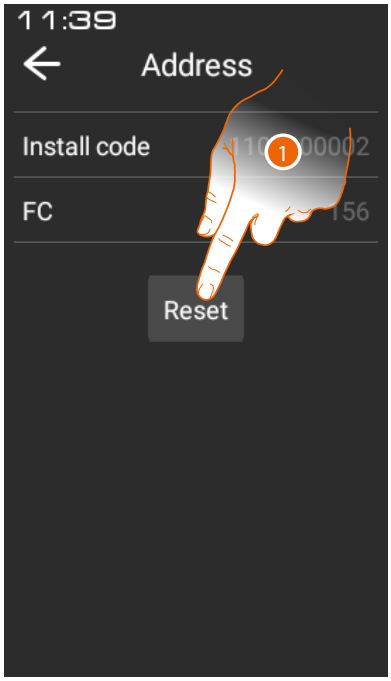

1. Touch to reset the device

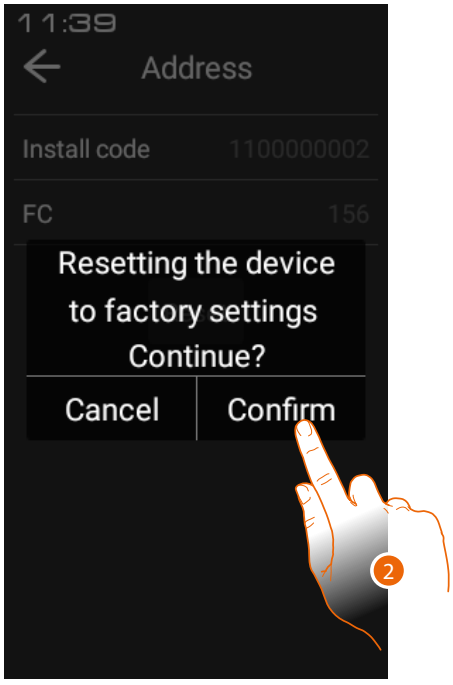

2. Touch to confirm

***Warning**: after confirmation, all customisations will be deleted and the parameters will be restored to factory values*

Setting

In this section it is possible to enable different types of functions.

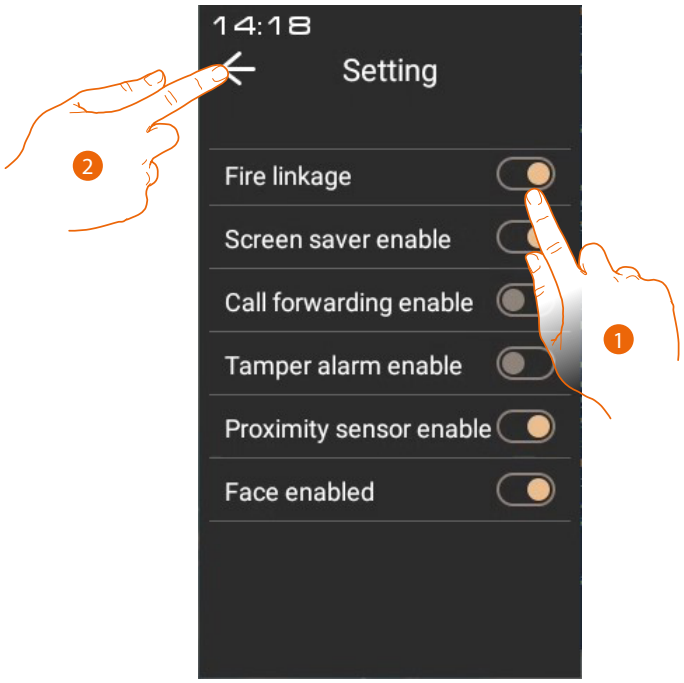

1. Touch to enable the function
2. Touch to save the setting

Fire linkage	It enables the Fire-fighting function
Screen saver enable	It enables the screen saver
Call forwarding enable	It enables the call forwarding to the GS
Tamper alarm enable	It enables the EP tamper alarm, to protect the EP from removal by intruders
Local access code	It enables the customised local code to access the building
Proximity sensing enable	It enables the proximity sensor to activate automatically the display and its functions
Face enable	It enables the Face Recognition

Date and time

As default all the devices on the system have date and time aligned with those of the SD. However, it is possible to set the date and time of the single device in this section.

Note: *you can change the date&time only temporarily.*
During the night the server will realign date&time to the system datas.

Manual setting

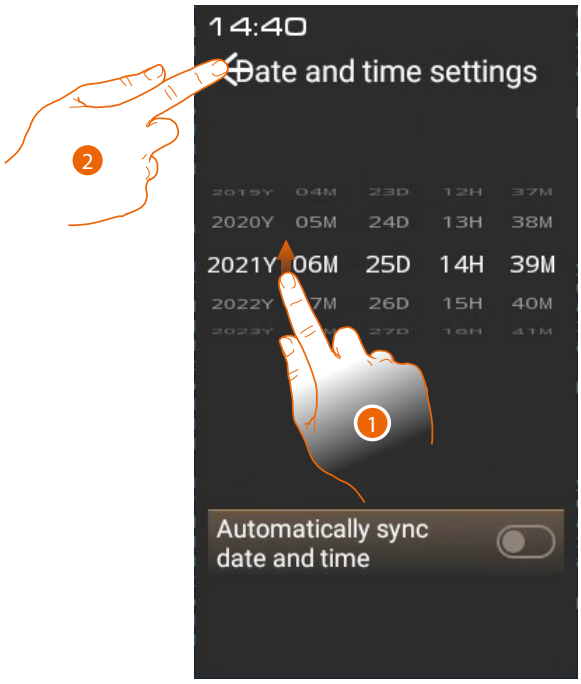

1. Scroll to select year, month, day, hour and minutes
2. Touch to save the setting

Automatic setting

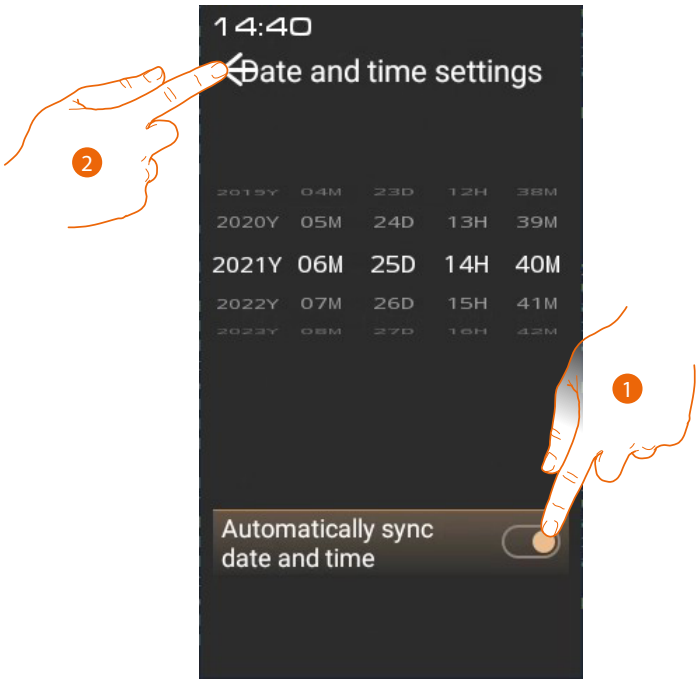

1. Touch to enable the automatic time and date update
2. Touch to save the setting

Access code

In this section it is possible to set the access code in the Setting menu and the access code to enter the building.

Settings

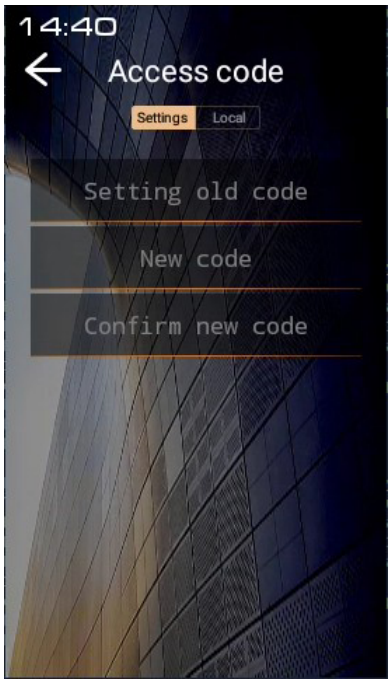

1. Enter the old code
2. Enter the new code
3. Enter again to confirm

Local

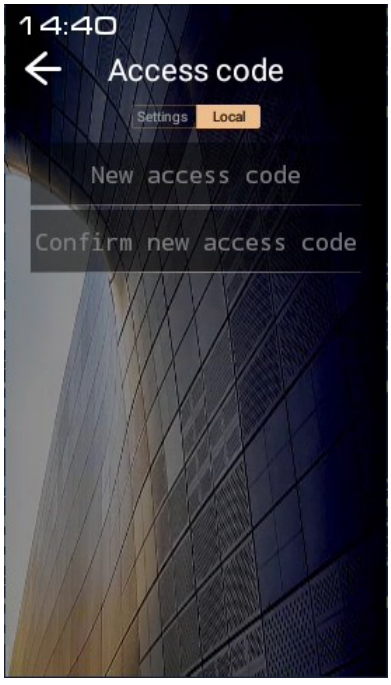

1. Enter the new code
2. Enter again to confirm

Guard station

In this section it is possible to set the EP reference GS.
The reference GS intercepts and manages the calls to the IU or anyone called directly by pressing the pushbutton on the Home page (see the Call a GS section)



A *Address of the current reference GS*

1. Touch to modify the reference GS
2. Select the new GS
3. Touch to save the setting

Door lock

In this section it is possible to set different parameters of the EP door lock

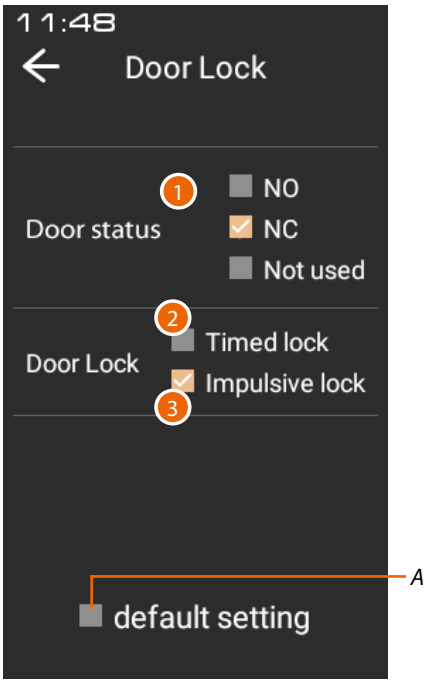

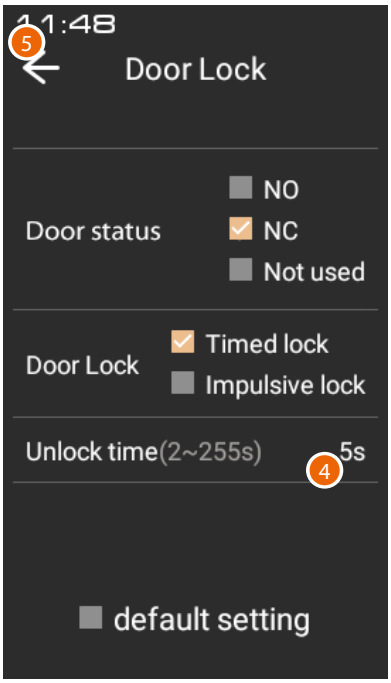

A *It restores the factory settings*

1. Door Status
   The Door Status function allows to receive door status notifications, and therefore a warning when the door is left open.
   To use this function, a clean contact in the GND SENSE input clamp is required.
   Touch to set a door status alarm:
   NO = sends an alarm when the contact remains open for more than 2 minutes
   NC = sends an alarm when the contact remains closed for more than 2 minutes
   Not used never sends alarm
   The alarm is displayed on both the SSDES and GS
2. Door Lock
   The lock connected to the Lock+ / Lock- clamps can be controlled using pulse or timed commands
   Touch to set the timed mode
3. Touch to set the impulsive mode
4. Enter the contact activation time in seconds
5. Touch to save the setting

Display & Volume

In this section it is possible to set some display parameters and adjust the ringtone volume

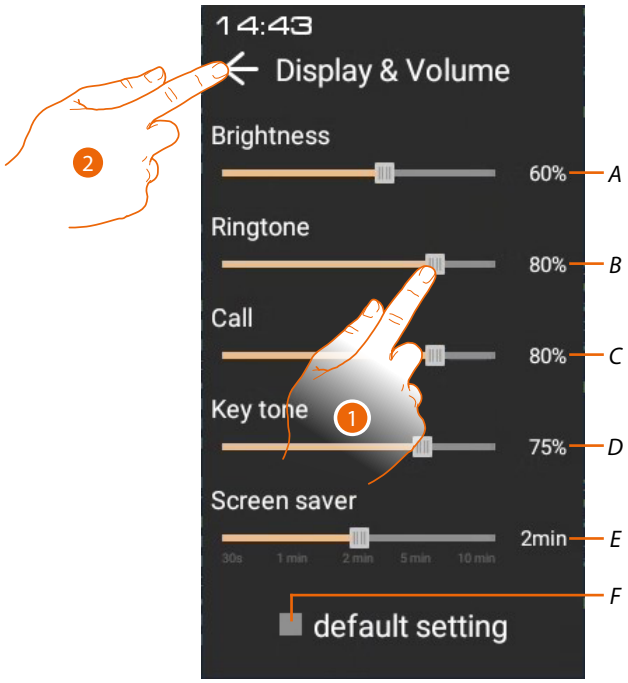

A *It adjusts the brightness (backlighting)*

B *It adjusts the ringtone volume*

C *It adjusts the call volume*

D *It adjusts the tone volume when a key is pressed*

E *It adjusts the screen saver activation time*

F *It restores the factory settings*

1. Touch to adjust the parameters
2. Touch to save the setting

Ringtone

In this section it is possible to listen to the tones associated to the different types of ringtones or other.

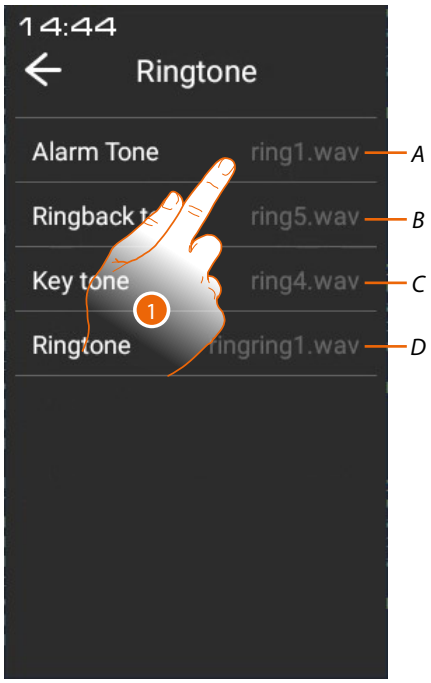

A Alarm tone

B Call in progress tone (ringback)

C Confirmation key tone

D Ringtone not used (future use)

1. Touch to listen to the tone

Face settings

In this section it is possible to set some Face Recognition parameters

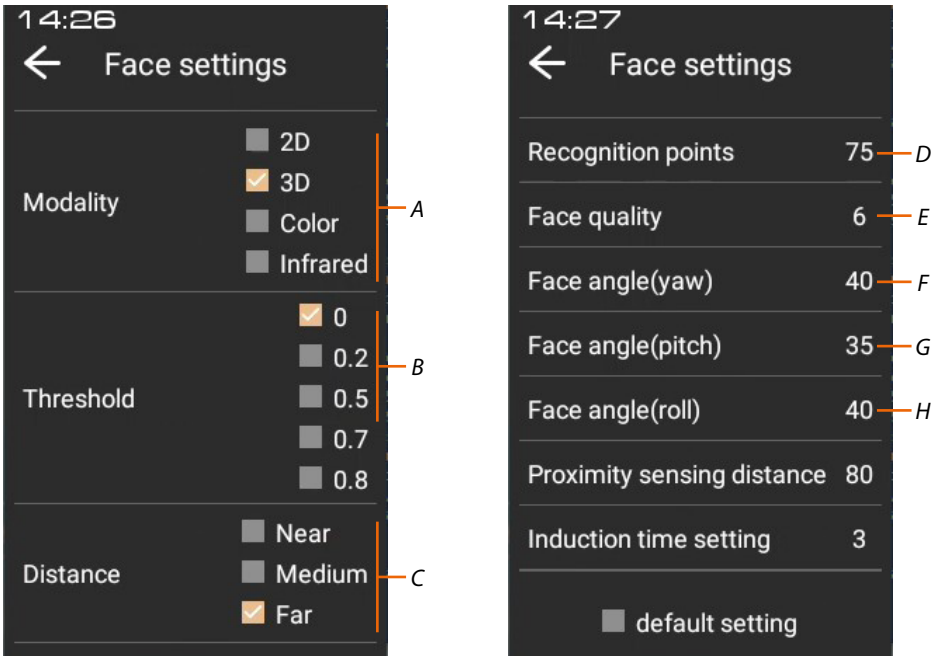

A *Camera operating modes:*
***2D** - in this mode, the depth of the image is not checked, and so showing a photograph opens the EP lock*
***3D** - in this mode, the depth of the image is checked, so recognition is only confirmed if someone is in front of the EP (DEFAULT)*
***Colour** - in this mode, the face is only checked by the colour camera (DAY)*
***Infrared** - in this mode, the face is only checked by the infrared camera (NIGHT)*

B **Sets the level of face recognition accuracy and therefore the degree of security.*
0= lower level of accuracy and security
0.8= higher level of accuracy and security (higher possibility of failed recognitions)

C *Set the distance for the face recognition*

D *Enter the number of recognition points to accept the face*

E *Enter the minimum image quality to accept the recognition*

F **Maximum angle of face rotation (left/right in relation to the frontal position), for which facial recognition is performed.*
If the rotation is greater, the face is not recognised.

G **Maximum angle of face inclination (left/right in relation to the frontal position), for which facial recognition is performed.*
If the inclination is greater, the face is not recognised.

H **Maximum angle of face inclination (up/down in relation to the frontal position), for which the facial recognition is performed.*
If the inclination is greater, the face is not recognised.

YAW (*F*)

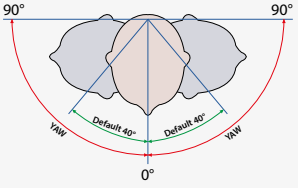

PITCH (*G*)

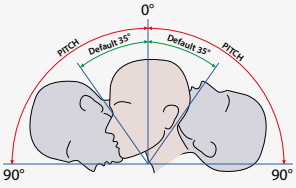

ROLL (*H*)

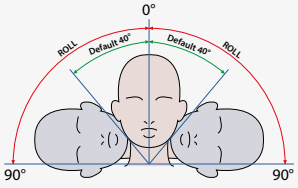

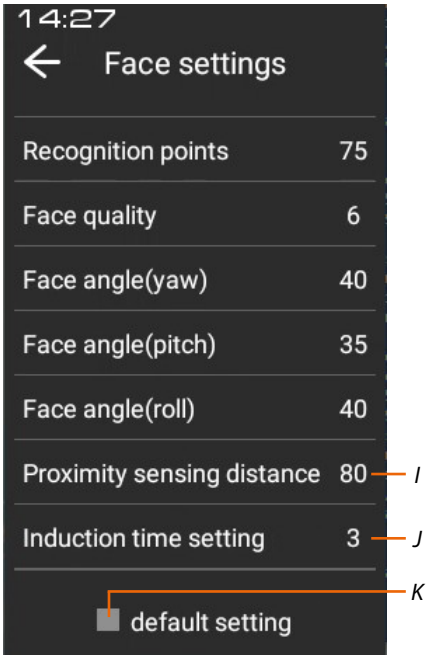

I *Enter the distance from the proximity to activate the recognition function*

J *Enter the time from when the Home Page appears to when the Face recognition function starts*
During the face recognition, any other operation is inhibited, even the call.
This time is important if the Face recognition is unsuccessful. You must thus set a time which is long enough for you to be able to call the IU before the Face recognition function reactivates.

K *Restore the factory settings*

**__Note__: Only change these parameters if absolutely necessary*

Background

In this section it is possible to set the interface background

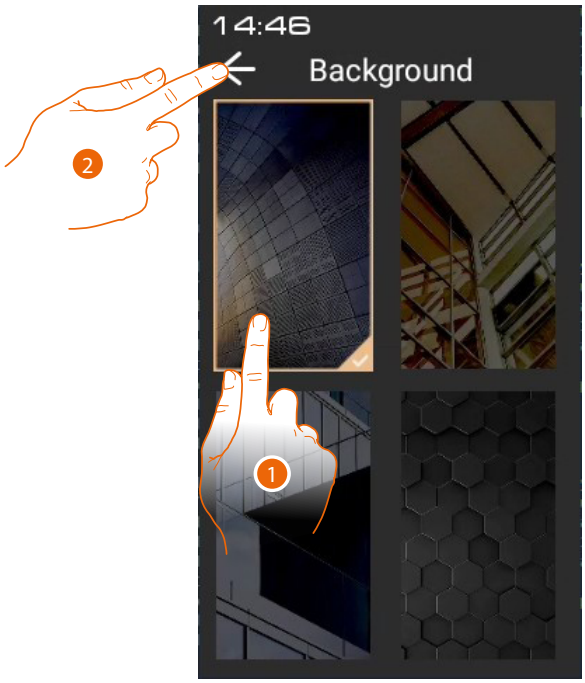

1. Select the background
2. Touch to save the setting

Note: *it is possible to select other backgrounds or create new ones using the SW*

Information

In this section it is possible to display different information on the device

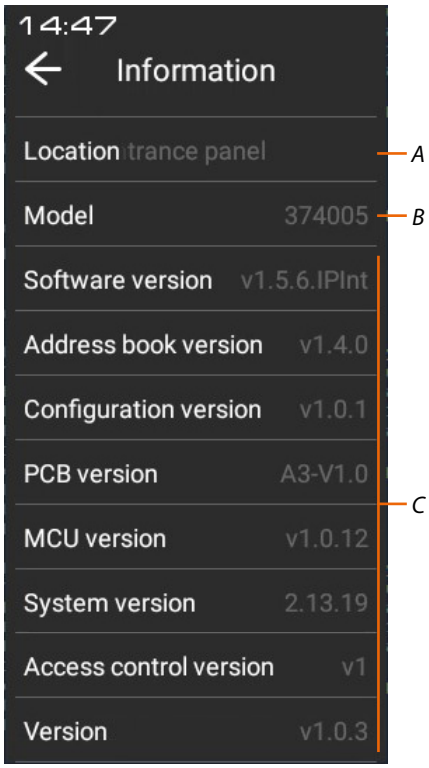

A Device address

B Item code

C Versions of the different device components

Language

In this section it is possible to set the interface language



1. Touch to open the language selection panel
2. Select the language
3. Touch to save the setting

User guide

In this section it is possible to download this manual using the QR code



1. Using a smartphone, scan the QR Code
2. Search for the 374000 374001 code
3. Download the manual

BTicino SpA
Viale Borri, 231
21100 Varese
www.bticino.com

BTicino SpA reserves the right to change at any time the content of this manual, and to communicate the changes made in any form, and in any way, deemed appropriate.