87045 LIMOGES Cedex France
Telephone: (+33) 05 55 06 87 87 - Fax: (+33) 05 55 06 88 88

Modular power supply - BUS/KNX

Catalogue number(s): 0 035 12

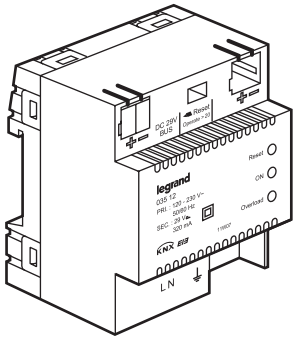

CONTENTS Page

1. Use 1
2. Technical features 1
3. Dimensions. 2
4. Connection 2
5. Care 2
6. Standards 2

1. USE

The modular power supply provides the power required by the BUS/KNX. Connection to the BUS line is via the BUS connection terminal on the front panel.

2. TECHNICAL FEATURES

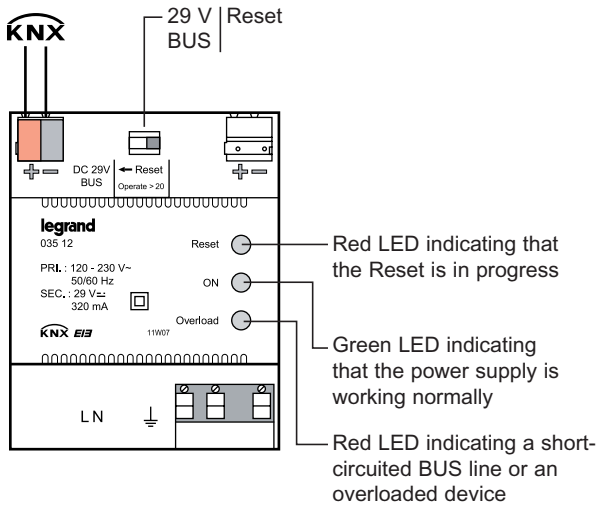

2. TECHNICAL FEATURES *(continued)*

Supply voltage	100-240 V~
Frequency	50/60 Hz
Output voltage	29 V⎓
Output current	320 mA
KNX connection	Red/black KNX connector
Terminal type	automatic
Terminal capacity	4 x (Ø 0.6 mm < 8 mm < Ø 0.8 mm)
Protection index	
Penetration by solid and liquid matter	IP20 (installation in an enclosure)
Impact resistance	IK04
Number of modules	4
Operating temperature	-5°C to +45°C
Storage temperature	-25°C to +70°C
Weight	240 g

Each BUS line requires a modular power supply.

Additional power supplies can be installed on the same line with the coupler (Cat. No. 0 035 16).

The distance between the BUS/KNX modular power supply and the device must not exceed 350 m.

Note: All technical information is available at **www.legrandoc.com**

Modular power supply - BUS/KNX

Catalogue number(s): 0 035 12

3. DIMENSIONS

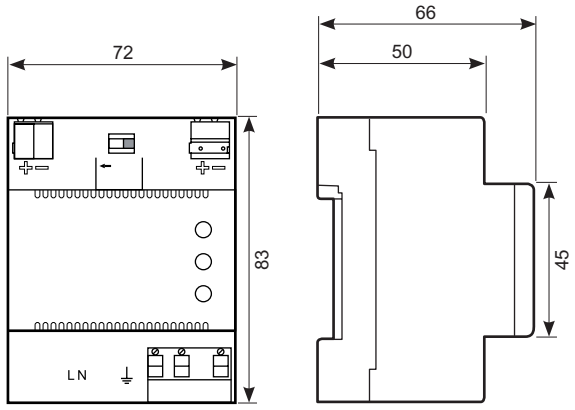

4. CONNECTION

All the wiring must be carried out with the mains power off.

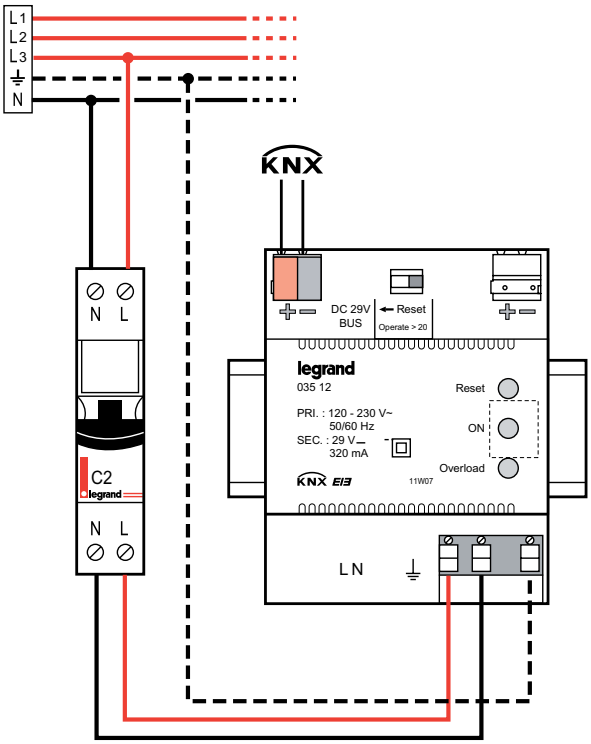

5. CARE

Do not use: acetone, tar-removing cleaning agents or trichloroethylene.

Resistant to the following products:
- Hexane (EN 60669-1)
- Methylated spirit
- Soapy water
- Diluted ammonia
- Bleach diluted to 10%
- Window-cleaning products

WARNING: Always test before using other special cleaning products.

6. STANDARDS

Directive: CE

Installation standards: NFC 15-100

Product standards: IEC 60669-2-1

Environmental standards:
- EU Directive 2002/96/EC:
  WEEE (Waste Electrical and Electronic Equipment)
- EU Directive 2002/95/EC:
  RoHS (Restriction of Hazardous Substances)
- Decrees and/or regulations: ERP (public buildings)
  ERT (workplace buildings)
  IGH (high-rise buildings)