KNX Power supply, 640mA

Catalogue number(s): 0 026 94

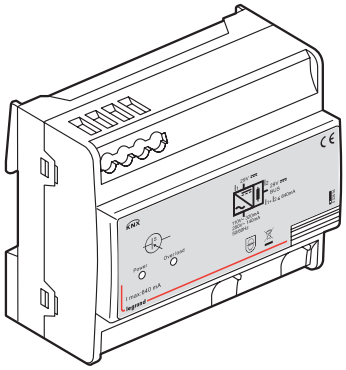

CONTENTS **Page**

1. Use 1
2. Technical Features 1
3. Dimensions 2
4. Connection 2
5. Standards and approvals 2
6. Normal working test 2

1. USE

EIB/KNX power supply produces and monitors EIB / KNX system voltage. The bus line is decoupled from the power supply with the integrated choke.
The power supply is connected to the bus line with a bus connection terminal. A reset is triggered by pressing the reset push button and lasts 22 seconds (regardless of the duration of the push button action). The bus line disconnected from the power supply and the devices connected to this bus line are returned to their initial state. If the line should be disconnected for a longer period, the bus connection terminal must be removed from power supply.
A 29V DC auxiliary voltage is made available via an additional connection terminal. This voltage can be used to supply a further bus line (in connection with a separate choke).

- Before use, please read this instruction carefully and use the power supply strictly according to the instruction.
- This power supply is for indoor use only and shall be installed in distribution box which can provide the protection mechanism for avoid electric shock.
- Please keep this equipment from humidity.
- Before use, the input and output voltage must be checked to secure correct use.
- The cover may under no circumstances be opened. If the cover is damaged,then the adaptor may no longer be used.
- The power supply shall be installed and used according to national wiring rules.
- For indoor use only.
- The product is not a toy, keep it where the children can not reach it.
- The power supply are only supply for EIB / KNX system equipment with bus line connection terminal.
- Correct Disposal of this product:This marking indicates that this product should not be disposed with other household wastes throughout the EU. To prevent possible harm to the environment or human health from uncontrolled waste disposal, recycle it responsibly to promote the sustainable reuse of material resources. To return your used device,please use the return and collection systems or contact the retailer where the product was purchased. They can take this product for environmental safe recycling.

2. TECHNICAL FEATURES

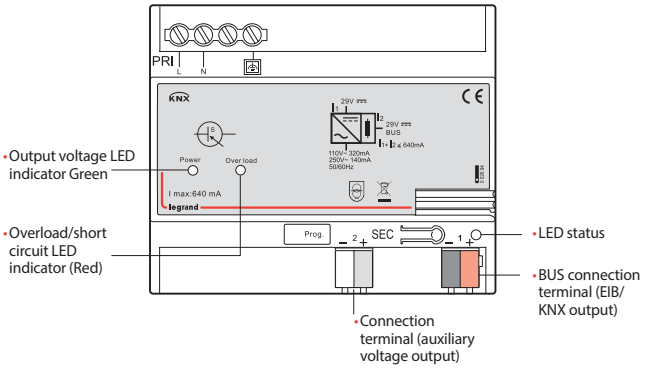

■ 2.1 Eectrical features

Power supply
Input voltage: 110-250V~, 50-60Hz

Power loss
< 6 W

Efficiency
75%

Output
EIB/KNX output (DPSU): 1 line with integrated choke

EIB/KNX nominal voltage
29 V DC +2/–1V, SELV

Auxiliary voltage output
1 (without choke)

Auxiliary voltage:
29 V DC +2/0V, SELV

EIB/KNX nominal current
(Total of EIB/KNX and auxiliary voltage output) 640 mA, short-circuit-proof

Sustained short-circuit current
< 1.3 A

Mains failure back-up time
> 200ms

Connection
• power supply: 2-srew terminals
• Cable cross-section:
- Single-core 0.2 - 4.0mm²
- Multi-core 0.2 - 2.5mm²

2. TECHNICAL FEATURES (CONTINUED)

■ 2.2 Operating/Display

• Green LED "ON" : output voltage is OK;
• Red LED "I" > Imax: overload or short circuit
• Reset push button: Reset at the EIB / KNX output (starts when the push button is pressed and lasts 22 seconds)
• Red LED: Reset at the EIB/KNX output.

■ 2.3 Mechanical features

IP Grade
IP 20 (EN 60529)

■ 2.4 Climatic features

Ambient temperature range
• Operation: - 5 °C ~ + 45 °C
• Storage: - 25 °C ~ + 55 °C
• Transport: - 25 °C ~ + 70 °C

3. DIMENSIONS

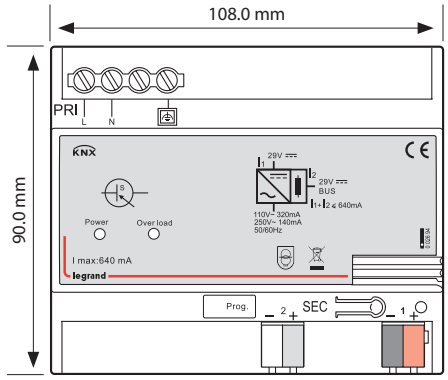

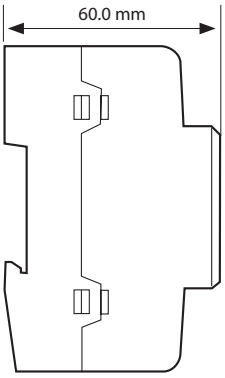

4. CONNECTION

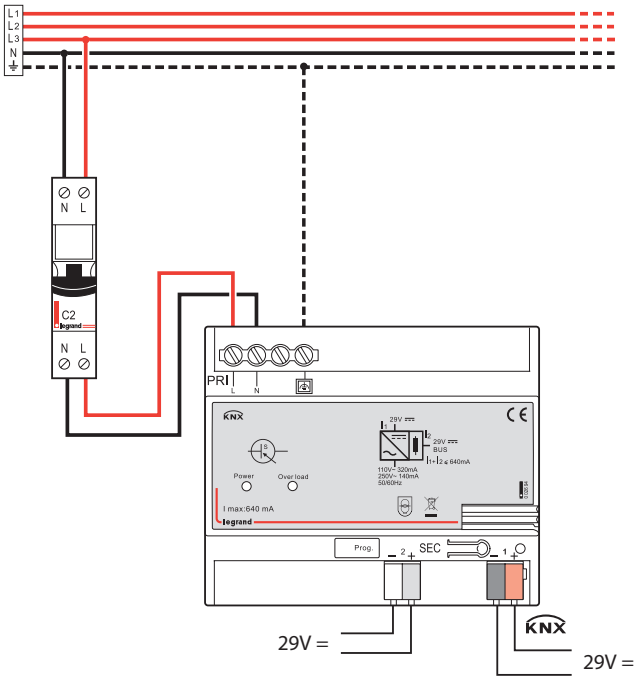

EIB/KNX output
Bus connection terminal (black/red)

Auxiliary voltage output
Connection terminal (yellow/grey)

5. STANDARDS AND APPROVALS

Certification
KNX approved

CE certified

Note:
All technical information is available at
www.legrandoc.com

6. NORMAL WORKING TEST

Switch on the mains voltage once the device has been correctly installed, the green LED "ON", all other LEDs are switched off, the device is functioning correctly.