





EAN code
IM3-20B: 8595188132305
IM3-40B: 8595188132312
IM3-80B: 8595188132329

Technical parameters	IM3-20B	IM3-40B	IM3-80B
Inputs			
Input:	2x* IN1, IN2**	4x* IN1, IN2**	8x* IN1- IN5**
Max. frequency pulse reading:	10 Hz		
Temperature measuring:	Yes, input for external thermo sensor TC/TZ		
Range /accuracy of thermomeasuring:	-20 to +120°C / 0.5°C from the range		
Outputs			
Output voltage / current:	12 V DC/75 mA, for supplying EZS sensors		
Communication			
Installation BUS:	BUS		
Status indication unit:	green LED RUN		
Power supply			
Supply voltage / tolerance:	27 V DC, -20 / +10 %		
Rated current:	20 mA (at 27V DC), from BUS		
Rated current of unit for full load on output 12 V DC:	60 mA		100 mA
Connection			
Terminal:	0.5-1 mm²		
Inputs:	4x conductors CY, profile 0.75mm², length 90mm	6x conductors CY,	x
Operating conditions			
Operating temperature:	-20 to +55 °C		
Storing temperature:	-30 to +70 °C		
Protection degree:	IP30		
Overvoltage category:	II.		
Pollution degree:	2		
Operating position:	any		
Installation:	into installation box		
Dimensions and weight			
Dimensions:	49 x 49 x 13 mm		
Weight:	30 g	32 g	27 g

* NO or NC against GND(-)
** are balanced inputs

- Binary input units IM3-20B, IM3-40B and IM3-80B are used for connection of 2, 4 or 8 devices with potential-less contacts (switches, buttons, switches of other design, PIR detectors, fire and gas detectors, etc.).
- Part of the inputs can be used as a balanced for alarm detectors:
  - IM3-20B – inputs IN1, IN2
  - IM3-40B – inputs IN1, IN2
  - IM3-80B – inputs IN1 – IN5.
- Contacts of external devices connected to the inputs of the unit can be NO or NC - Input parameters are configured in the software iDM3.
- Within the internal EZS configured in the iDM3 software, inputs must be set to balance or double balance.
- The units generate a supply voltage of 12V DC / 75 mA for powering external intrusion detectors, so they can power PIR detectors, fire and gas detectors.
- Active use 12 V DC output for powering detectors increases the nominal consumption of units from BUS (see technical data).
- The units can be used for counting pulses of energy meters with pulse output.
- The units are equipped with a temperature input for connecting an external two-wire temperature sensor TC/TZ (see accessories).
- IM3-20B, IM3-40B, IM3-80B in case type B are designed for mounting into a installation box.

Connection

IM3-20B

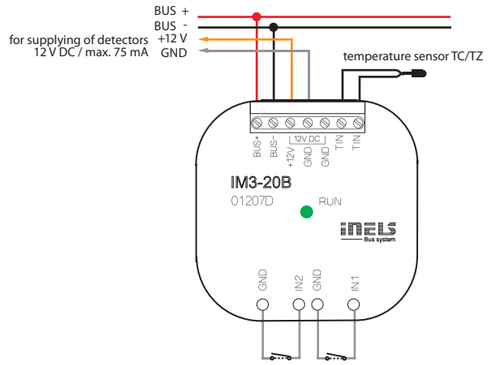

IM3-40B

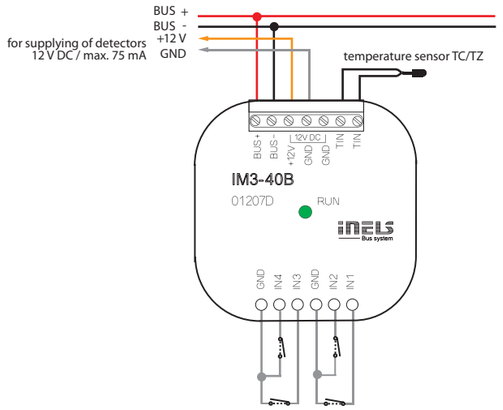

IM3-80B

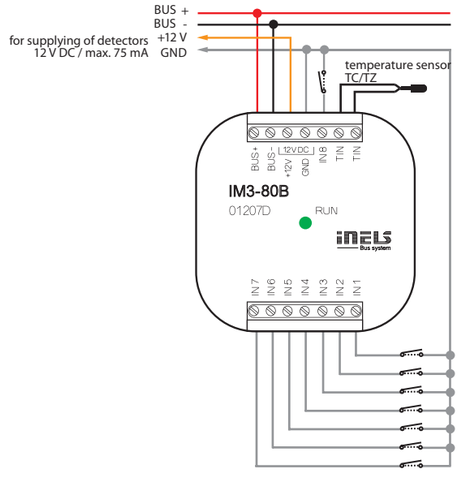

Balanced input

Simple:

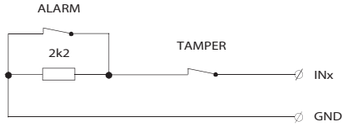

Double:

