





EAN code
SA3-01B: 8595188132350
SA3-02B: 8595188132367

| Technical parameters | SA3-01B | SA3-02B |
|---|---|---|
| **Inputs** | | |
| Temperature measuring: | Yes, input for external thermo sensor TC, TZ | |
| Scope and accuracy of tem. meas.: | -20 .. +120°C; 0.5°C from the range | |
| **Outputs** | | |
| Output: | 1x NO 16 A/AC1 | 2x NC 8 A/AC1 |
| Switching voltage: | 250 V AC, 24 V DC | |
| Switched load: | 4000 VA/AC1, 384 W/DC | 2000 VA/AC1, 192 W/DC |
| Surge current: | 30 A; max. 4 s. when repeating 10% | 10A |
| Output relays separated from all internal circuits: | reinforced Insulation (Cat. II surges by EN 60664-1) | |
| Insulation voltage between relay outputs RE1-RE2: | x | basic Isolation (Cat. II surges by EN 60664-1) |
| Minimal switching current: | 100 mA / 5 V | |
| Switching frequency/no load: | 1200 $min^{-1}$ | 300 $min^{-1}$ |
| Switching frequency/rated load: | 6 $min^{-1}$ | 15 $min^{-1}$ |
| Mechanical lifetime: | 3x $10^7$ | 1x $10^7$ |
| Electrical lifetime for AC1: | 0.7x $10^5$ | 1x $10^5$ |
| Output indication: | yellow LED | 2x yellow LED |
| **Communication** | | |
| Installation BUS: | BUS | |
| **Power supply** | | |
| Supply voltage / tolerance: | 27 V DC, -20 / +10 % | |
| Rated current: | 30 mA (at 27V DC) | 50 mA (at 27V DC) |
| Status indication unit: | green LED RUN | |
| **Connection** | | |
| Data terminals: | terminal, 0.5 - 1 $mm^2$ | |
| Power outputs: | 2x conduct. CY, Ø 2.5 $mm^2$ | 6x conduct.CY, Ø 0.75 $mm^2$ |
| **Operating conditions** | | |
| Operating temperature: | -20 .. +55 °C | |
| Storage temperature: | -30 .. +70 °C | |
| Protection degree: | IP30 | |
| Overvoltage category: | II. | |
| Pollution degree: | 2 | |
| Operating position: | any | |
| Installation: | into installation box | |
| **Dimensions and weight** | | |
| Dimensions: | 49 x 49 x 21 mm | |
| Weight: | 50 g | 45 g |

- Actuators are designed for switching of one (SA3-01B), respectively two (SA3-02B) of various appliances and loads relay output (potential-less contact).
- SA3-01B contains 1 relay with switching potentialless contact with max. load 16 A/4000 VA/AC1.
- SA3-02B contains 2 relays with switching potentialless contacts with max. load 8 A/2000 VA/AC1.
- Output contacts are separately controllable and addressable.
- Both relay actuator SA3-02B are individually decorated input terminals, and therefore can switch various independent potentials.
- Thanks to changeover contacts, the SA3-02B actuator can used to control a 230 V drive (such as blinds, shutters or awnings), whereas by proper bridging of contacts, it is possible to secure locking hardware options while switching on phase two outputs.
- Actuators are equipped with a temperature input for connecting an external two-wire temperature sensor TC / TZ (see accessories).
- LED on front panel signalizes state of each output.
- SA3 is normally supplied in the option $AgSnO_2$ contact material.
- SA3-01B, SA3-02B are designed for mounting into the installation box.

## Connection

**SA3-01B**

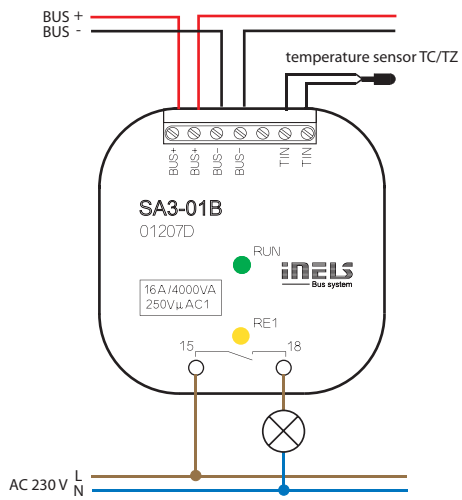


**SA3-02B**

