DAC3-04B

EN **Digital - analog converter**

Characteristics

- DAC3-04B is converter of a digital signal to an analog voltage signal.
- The converter generates 4 analog voltage signals, which can be regulated according to type of controlled device, in a range 0-10V or 1-10V.
- This is used for regulating and controlling devices that may be controlled by this signal (dimmable ballasts of fluorescent lamps and other types of light sources - e.g. LED panels from the assortment of ELKO Lighting, dimming actuator for LED and RGB strips RFDA-73M/RGB, thermostatic heads, servo drives, elements for measuring and regulation and others).
- Range of output voltage is adjustable in iDM3.
- DAC3-04B is equipped with a temperature input for connecting a 2-wire external sensor TC / TZ.
- DAC3-04B in version B is designed for mounting into an installation box.

Description of device

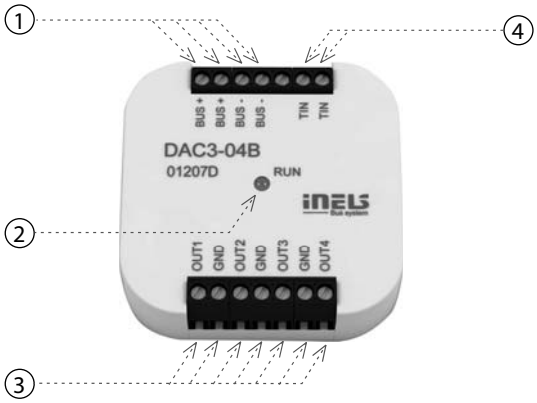

1. Data BUS
2. LED indication of unit´s state
3. Outputs
4. Input for thermo sensor

General instrucions

CONNECTION INTO THE SYSTEM

Connect the product to the system according to the connection diagram listed with each product. The wires of data BUS of iNELS system are connected to the terminals BUS+ (standard red wire for single-pair wiring, red and yellow for two-pair wiring) and BUS- (standard black wire for single-pair wiring, black and white for two-pair wiring), and it is not possible to change the terminals. A twisted pair of wires must be used for the data BUS with a wire diameter at least 0.8 mm. Data communications and power supply to the units are led in a single pair of wires, and you must observe the power cable size with regard to voltage loss on the wire and the maximum power draw.

CAPACITY AND CENTRAL UNIT

It is possible to connect to the central unit CU3-01M or CU3-02M two independent BUSes by means of terminals BUS1+, BUS1- and BUS2+, BUS2-. It is possible to connect to each BUS up to 32 units, so it is possible to connect directly to the central unit a total of 64 units. It is necessary to comply with the requirement of a maximum load of one BUS line - maximum up to 1000 mA current. It is the sum of the rated currents of the units connected to the BUS line, other units can be connected using the units MI3-02M, which generate further BUSes. These are connected to the CU3 unit via the system BUS EBM and you can connect a total of 8 units via EBM bus to the central unit MI3-02M.

COMMUNICATION BUS OF THE SYSTEM

The BUS must have a cable created by a twisted pair of wires for data bus of the system with a minimum wire diameter of 0.8 mm. A shielded cable must be used in case of installation of cables of the BUS in an environment with the possibility of electromagnetic interference (e.g. when running along power lines, near electric machines and devices, during LV passage through a distributor, etc.). We highly recommend using the cable JYSTY 2x2x0.8 for BUS. The BUS cable is installed in accordance with its mechanical properties given by the producer (into a pipe/bar, under plaster, underground, suspended, etc.) To increase the mechanical resistance of cables, we always recommend installing the cable into an electrical insulation pipe of the appropriate diameter. The total length of wires of the BUS for CU3-01M (CU3-02M), or MI3-02M, can be 1,100 m (550 m for each BUS). The topology of the communications BUS is open with the exception of topology of the circuit. It is necessary to use the cable FTP CAT5e or higher for the system BUS EBM - one pair of wires is connected to the terminals EBM+ and EBM- and the second pair of wires can be curled and connected to GND terminal (just on the one side of EBM BUS). The typology of EBM system BUS is strictly linear and must be terminated at both ends with a nominal resistance value of 120Ω. It is the installer's responsibility to follow all instructions in the manual and all installation requirements for the RS485 BUS.

SUPPLYING THE SYSTEM

For supplying power to system units, it is possible to use the power sources of ELKO EP titled PS3-100/iNELS. We recommend backing up the system with backup batteries connected to the source of PS3-100/iNELS (see sample diagram of connecting the control system).

GENERAL INFORMATION

To operate the unit, it is necessary that the unit is connected to a central unit CU3 series, connected to the central unit of the system CU3, or to a system that already contains this unit as its expansion to include further system.

All unit parameters are set through the central unit CU3 in the software iDM3. There are LED diodes on the unit front panel, for indication of supply voltage and communication with the central unit series CU3. In case that the RUN diode flashes at regular intervals, so there is standard communication between the unit and BUS. If the RUN diode lights permanently, so the unit is supplied from BUS, but there is no communication between BUS and unit. In case that RUN diode is OFF, so there is no supply voltage on the terminals BUS+ and BUS-.

Note: Analog output and input of thermo sensor is galvanically connected to BUS.

Connection

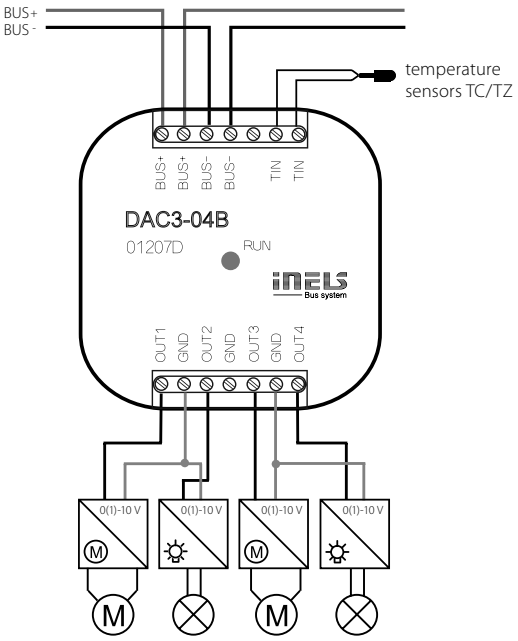

Technical parameters

DAC3-04B

Inputs	
Temperature measuring:	YES, input for external temperature sensor TC/TZ
Range / accuracy of temp. measuring:	-20 .. +120 °C; 0.5 °C from the range
Outputs	
Analog voltage output / rated current:	4x 0(1)-10 V/10 mA
Communication	
Installation BUS:	BUS
Status indication unit:	green LED RUN
Power supply	
Supply voltage / tolerance:	27 V DC, -20 / +10 %
Rated current:	50 mA (at 27V DC), from BUS
Connection	
Terminal:	0.5 - 1 mm^2
Operating conditions	
Operating temperature:	-20 .. +55 °C
Storing temperature:	-30 .. +70 °C
Protection degree:	IP30
Overvoltage category:	II.
Pollution degree:	2
Operating position:	any
Installation:	into installation box
Dimensions and weight	
Dimensions:	49 x 49 x 13 mm
Weight:	27 g

Warning

Before the device is installed and operated, read this instruction manual carefully and with full understanding and Installation Guide System iNELS3. The instruction manual is designated for mounting the device and for the user of such device. It has to be attached to electro-installation documentation. The instruction manual can be also found on a web site www.inels.com. Attention, danger of injury by electrical current! Mounting and connection can be done only by a professional with an adequate electrical qualification, and all has to be done while observing valid regulations. Do not touch parts of the device that are energized. Danger of life-threat! While mounting, servicing, executing any changes, and repairing it is essential to observe safety regulations, norms, directives and special regulations for working with electrical equipment. Before you start working with the device, it is essential to have all wires, connected parts, and terminals de-energized. This instruction manual contains only general directions which need to be applied in a particular installation. In the course of inspections and maintenance, always check (while de-energized) if terminals are tightened.