TI3-10B, TI3-40B | Temperature input, 1-channel and 4-channel





EAN code
TI3-10B: 8595188132886
TI3-40B: 8595188132695

Technical parameters	TI3-10B	TI3-40B
Input		
Temperature input for temperature measuring:	1x inputs for external thermo sensor *	4x inputs for external thermo sensor*
Emperature measurement range:	by type of sensor, prob from -50°C to 400°C	
Converter resolution:	15 bit	
Communication		
Installation BUS:	BUS	
Status indication unit:	green LED RUN	
Power supply		
Supply voltage / tolerance:	27 V DC, -20 / +10 %	
Rated current:	20 mA (at 27V DC), from BUS	
Connection		
Terminal:	0.5 mm² - 1 mm²	
Operating conditions		
Operating temperature:	-20 .. +55 °C	
Storing temperature:	-30 .. +70 °C	
Protection degree:	IP30	
Overvoltage category:	II.	
Pollution degree:	2	
Operating position:	any	
Installation:	into installation box	
Dimensions and weight		
Dimensions:	49 x 49 x 13 mm	
Weight:	27 g	27 g

*TC, TZ, Ni1000, Pt1000, Pt100, see accessories

Connection options

2-wire
- it is necessary to connect terminals TIN_B and COM

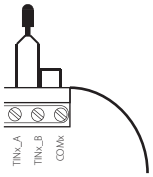

3-wire
- connection of the sensor needs to be done according to the technical specifications

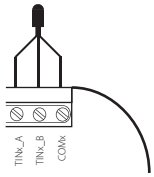

- These units are designed for connection of one (TI3-10B) to four (TI3-40B) external temperature sensors.
- Units range TI3 support the connection of the following temperature sensors:
  - TC / TZ - 2-wire connections
  - Ni1000, Pt1000, Pt100 - 2-wire and 3-wire connections.
- Used in when necessary to take temperatures from different places (for example large floor heating – diagonal layout of sensors, floor/space, indoor/outdoor temperature, technological device – boiler, solar heating etc.)
- Status of units indicated by green RUN LED on the front panel:
  - If the supply voltage is connected (units are powered via the BUS), but there is no communication with the master, RUN LED is lit continuously.
  - If the supply voltage is connected and the unit communicates via standard BUS, RUN LED flashes.
- TI3-10B, TI3-40B in version B is designed for mounting into an installation box.

Connection

TI3-10B

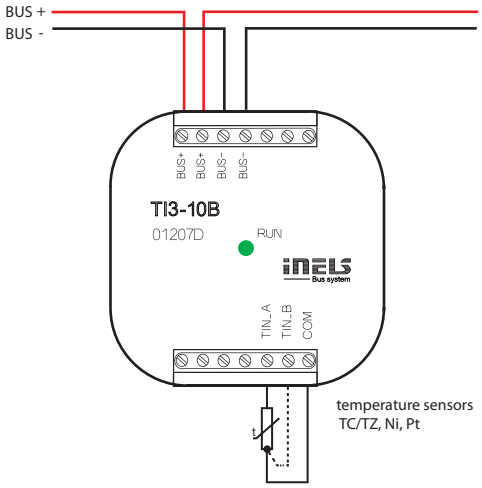

TI3-40B

