

Technical parameters	RFGSM-220M
Power	
Supply voltage:	11-30 V DC; backup power supply Li-Ion batteries
Maximum power consumption:	1 W in standby mode / power supply and communication max. 18 W
Current consumption:	90 mA at 12 V DC
Consumption during communication:	max. 1.5 A at 12 V DC
Working band of GSM module:	850/900/1800/1900 MHz
Transmitter output power:	2 W for GSM 900, 1 W for GSM 1800
Inputs IN1, IN2, IN3, IN4	
Control voltage:	AC 12-230 V or DC 12-230 V (separated optocoupler)
Control input power:	AC 0.025 VA/ DC 0.1 W
Length of control impulse:	min. 50 ms/ max. unlimited
Inputs RF:	one-/two-way addressed message 866 MHz, 868 MHz, 916 MHz
Outputs	
Number of contacts:	2x Switches ($AgSnO_2$)
Rated current:	8 A / AC1
Switching power:	2500 VA, 240 W
Min. switching power DC:	500 mW
Mechanical service life (AC1):	$1x10^7$
Electrical service life:	$1x10^5$
RF ouputs:	two-way addressed message 866 MHz, 868 MHz, 916 MHz
Other data	
Operating system PC:	MS Windows XP and higher
Range of RF module:	up to 150 m
Output for antenna:	SMA connector*
Operating temperature:	- 15 up to + 50°C
Operating position:	any
Mounting:	DIN rail EN 60715
Protection:	IP 20 from front panel
Overvoltage category:	II.
Contamination degree:	2
Cross-section of connecting wires (mm^2)	max. 1x 2.5; max. 2x 1.5 / with a hollow max. 1x 2.5
Dimensions:	90 x 52 x 65 mm
Weight:	198 g
Related standards:	EN 60730-1

* Max Tightening Torque for antenna connector is 0.56 Nm.

- The multi-function GSM communicator is used for remote switching of heating, lights, gate, garage door, etc.
- GSM communicator can be used in several ways, which can be combined:
  a) control by telephone, where a sent SMS or ringing through once switches an internal relay.
  b) reacts to 1 of 4 potential free wired inputs (detectors, switches), where it is possible to set a consequent reaction.
  c) offers the option of ascertaining the status of units iNELS RF Control (ON/OFF, temperature).
  d) control by telephone, where a sent SMS or ringing through once transmits an RF command to the switching unit within range, which then switches something (e.g. heating).
  e) security function (switching on the ALARM) in combination with wireless detectors, where activation / deactivation takes place by ringing through once or by key alarm.
- The three-module design of the unit into a switchboard enables connection of a switched load 2x 8 A (2x 2000 W).
- Settings are performed by SW Connect 1 via mini USB connector
- Li-Ion battery for 30 minute function backup
- The GSM communicator is powered by an adapter in the range 11-30 V DC.
- The package includes an internal antenna AN-I, in case of locating the communicator in a metal switchboard, you can use the external antenna AN-E for better signal reception.
- Range up to 150 m (in open space), if the signal is insufficient between the controller and unit, use the signal repeater RFRP-20 or protocol component RFIO² that support this feature.
- Communication frequency with bidirectional protocol iNELS RF Control² (RFIO²).
- Package includes: 2x internal antenna AN-I, mini USB connector, SW Connect 1, adapter 12 V 6 W.

Device description

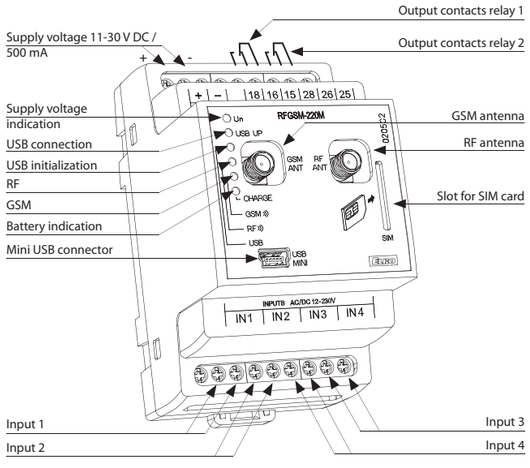

Connection

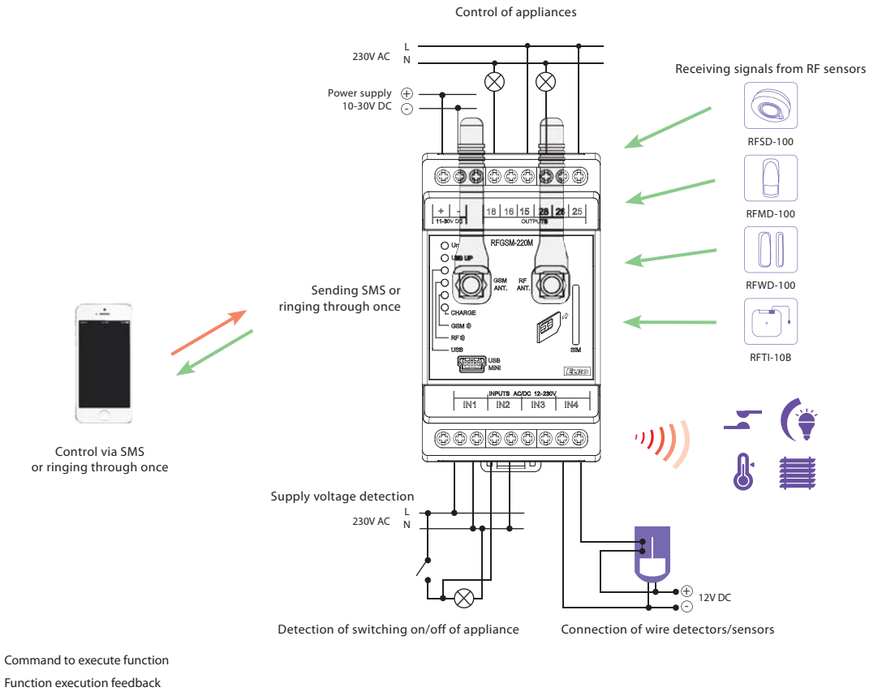

A) Thanks to the GSM communicator, you immediately know what the temperature is at home right now. Just send an SMS or ring the communicator once, the RF signal transfers this command to RF Touch and from RF Touch an SMS text message reply is sent back to your phone with the current temperature. You can then switch the heating on or off.

B) By sending an SMS or ringing once, you activate the GSM communicator, which sends an RF command to the temperature actuator, which then switches the heating (cable connection applied between the actuator and heater).

C) GSM communicator enables you to directly switch on up to 4 appliances. Its usefulness thus expands from simply switching into the area of detectors.
One of 4 inputs receives information from the detector and sends it by SMS to the given telephone number.