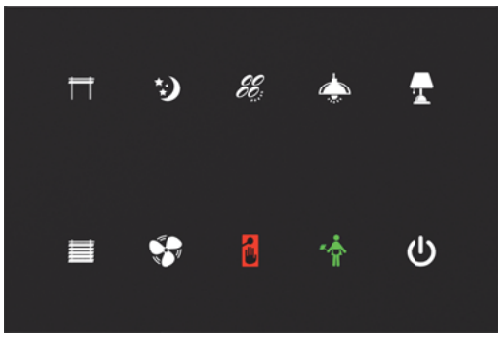

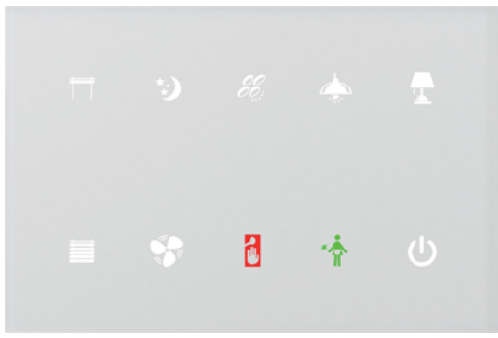

EAN code*

GSP3-100/B: 8595188156288
GSP3-100/W: 8595188156325

Technical parameters	GSP3-100
Inputs	
Temperature measuring:	YES, built-in temperature sensor
Scope and accuracy of temp. measurement:	0.. +55°C; 0.3°C from the range
Inputs:	2x AIN/DIN
Resolution:	by setting 10-bit
External temperature sensor:	YES, the connection between AIN1/DIN1 and AIN2/DIN2
Type external sensor:	TC/TZ
Temperature measurement range:	-20°C to +120°C
Temperature measurement accuracy:	0.5°C from the range
Buttons	
Number of control buttons:	10
Type:	Capacitive
Indication:	Coloured illuminated symbol
Outputs	
Acustic output:	piezo-changer
Tactile output:	Vibration motor
Communication	
Installation BUS:	BUS
Power supply	
Supply voltage / tolerance:	27 V DC, -20 / +10 %
Rated current:	25-65 mA (at 27V DC), from BUS
Connection	
Terminals:	0.5 - 1 mm²
Operating conditions	
Relative humidity:	max. 80 %
Operating temperature:	-20 .. +55 °C
Storing temperature:	-30 .. +70 °C
Protection degree:	IP20
Overvoltage category:	II.
Pollution degree:	2
Operation position:	any
Installation:	on the wall, observing the conditions for correct installation of the thermostat
Dimensions and weight	
Dimensions:	142 x 94 x 36 mm
Weight:	208 g

- Glass Touch Panel GSP3-100 is part of a comprehensive iNELS series of units for the management of the hotel rooms (GRMS), but the unit can be used wherever it is required to control multiple devices from one location.
- GSP3-100 is equipped with ten touch buttons whose functions can easily be edited using the software.
- The graphics of individual symbols are possible based on consultations with manufacturers to change and adapt to the requirements of the investor.
- Individual symbols can be any one of seven backlight colours - red, green, blue, yellow, pink, turquoise and white.
- Glass touch panel is a design component of the INELS system and is available in elegant black (GSP3-100/B) and white (GSP3-100/W) versions.
- Compared with standard glass touchscreen controllers with symbols GSB3-20/SB, GSB3-20/SW, GSB3-40/SB, GSB3-40/SW, GSB3-60/SB and GSB3-60/SW the GSP3-100 is one and a half times the width.
- The touch panel is equipped with an integrated temperature sensor. It is also equipped with two analogue-to-digital inputs (AIN/DIN), which can be used to connect two potential free contacts or one external temperature sensor TC / TZ (e.g. For measuring the temperature of the floor).
- The touch panel is also equipped with an ambient light intensity sensor. Based on information from the sensor it can light up indicative illumination symbols or perform various actions with the iDM3 software, e.g. To also switch the lighting circuits in the room.
- Advantages over conventional switches / buttons is saving space, signalling the state of any system output, the ability to measure temperature and an option to connect external pushbuttons or detectors.
- Each button can control any actuator (appliance) in the system. Also, you can assign a different function or macro (set of functions) to each button. It is therefore possible to use one button to control several appliances.
- GSP3-100 is designed for mounting into an installation box.

Connection

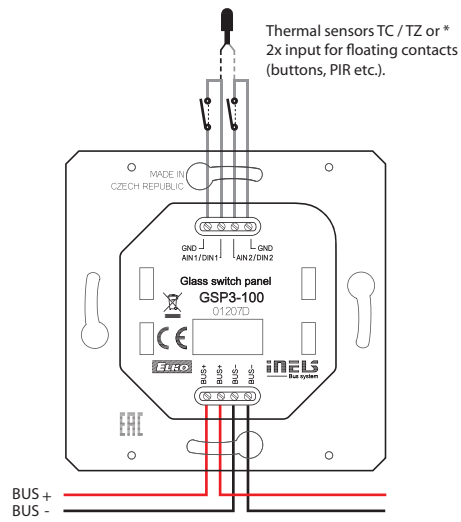

* The choice is made in iDM3 for each unit separately.