

EAN code
DMD3-1: 8595188157513

Technical parameters	DMD3-1
Inputs	
Angle of motion detection:	140 °, 4 m
Recommended installation height:	2.5 - 3 m
Changing the PIR sensitivity:	Yes, 0.. 127 (max. sensitivity)
PIR scan type:	single / dual
Default setup PIR:	99 dual
Temperature measuring:	YES, built-in temperature sensor /
Scope and accuracy of temp. measurement:	-25.. +110 °C; ± 0.3 °C
Humidity measurement:	YES / ANO
Humidity meas. range:	0 .. 99% RH
Humidity meas. accurancy:	± 4 % RH
Light Metering:	YES
Detection angle:	± 55 °
Measuring range:	1 - 100 000 lx
Number of control buttons:	1
Outputs	
Indication red LED:	identification DALI MASTER / communication options
Indicating blue LED:	PIR Activation
Indication green LED RUN:	communications / unit status
Communication	
Interface:	Installation BUS iNELS DALI /
Power supply	
From iNELS BUS:	27 V DC, -20 / +10 %
Rated current:	18 mA
From DALI BUS:	16 V (max. 23 V)
Rated current:	27 mA
Connection	
Terminals:	0.3 - 0.8 mm^2
Operating conditions	
Operating temperature:	-20 .. +55 °C
Storing temperature:	-30 .. +70 °C
Protection degree:	IP20
Operation position:	vertical
Installation:	celling
Dimension and weight	
Dimension:	Ø 76 x 73 mm
- installation hole diameter:	60 mm
- diameter visible:	76 mm
Weight:	81 g

For proper function of the detector it is necessary to eliminate all interference from heat or light sources in the sensing area.

The detector cannot be installed on an unstable or vibrating surface.

Lower mounting height will reduce the overall size of the detection zone.

The distance from the unit and the colour of the illuminated area affects the resulting value of the measured illumination by the DMD3-1 unit.

- DMD3-1 is a combined detector for ceiling mounting.
- DMD3-1 can be used in two basic ways:
  - Motion detector.
  - Sensor luminescence.
- The unit is equipped with two communication interfaces:
  - Installation iNELS BUS.
  - DALI.
- The motion detector is used to detect people moving in the area. Using the passive scanning infrared spectrum for detection.
- Integrated luminescence sensor can be used for sensing current luminescence at the point of installation of the unit. This information can be used in tasks to maintain a constant luminescence. In space where it is possible, thanks to the contribution of natural light from the outside to adjust the artificial light, which can reduce energy consumption.
- Setting the communication interface is done using the SET button.
- The unit can be configured via the iNELS3 Designer & Manager software, which, among other things it is possible to:
  - Set the desired function depending on detected motion.
  - Resolve jobs based on the value of luminescence.
  - Enable / disable the alarm LED on the detector housing.
- DMD3-1 detector is designed for indoor installation and is not intended for outdoor use.
- DMD3-1 detector is powered directly via the iNELS BUS installation (nominal 27 V DC) or DALI BUS (nominal 16 V DC).

Connection

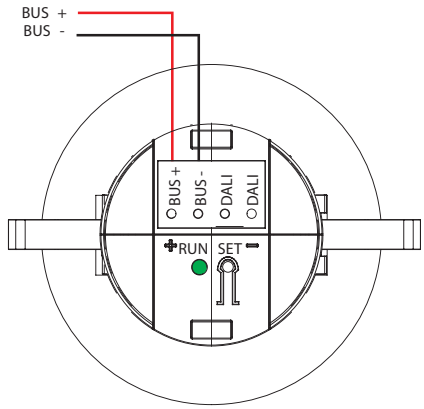

Scanning range

Motion detector

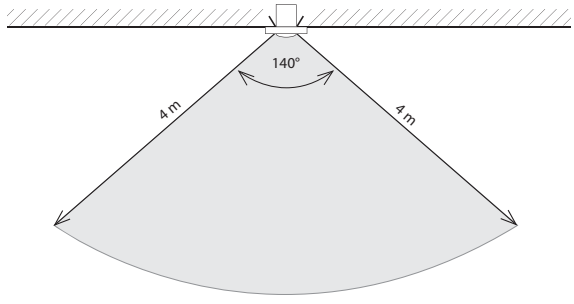

Light sensor

