IDRT3-1 | Digital room thermo-regulator



EAN code

IDRT3-1 white:	8595188149488 (device, cover)
IDRT3-1 ivory:	8595188179614 (device, cover)
IDRT3-1 ice:	8595188179591 (device, covert)
IDRT3-1 pearl:	8595188179621 (device, cover)
IDRT3-1 aluminium:	8595188179584 (device, cover)
IDRT3-1 gray:	8595188179607 (device, cover)

Technical parameters	IDRT3-1
Inputs	
Temperature measuring:	YES, built-in thermo sensor
Range / accuracy of temp. measuring:	0 to +55°C; 0.3°C from range
Heating/cooling circuit correction:	±3, ±4 or ± 5 °C
Manual ontrol of heating/ cooling circuit:	2 x buttons
External temperature sensor:	YES, the connection between AIN1/DIN1 and AIN2/DIN2
Type external sensor:	TC/TZ
Temperature measurement range:	-20°C to +120°C
Temperature measurement accuracy:	0.5°C from range
Communication	
Installation:	BUS
Display:	symbol display
Backlight:	YES
Power supply	
Supply voltage / tolerance:	27 V DC, -20 / +10 %
Rated current:	20 mA (at 27V DC), from BUS
Connection	
Terminals:	0.5 - 1 mm^2
Operating conditions	
Operating temperature:	0 to +50 °C
Protection degree:	IP20
Overvoltage category:	II.
Pollution degree:	2
Operation position:	vertical, downward with BUS terminal
Installation:	into installation box
Dimensions and weight	
Dimensions	
- plastic:	85.6 x 85.6 x 50 mm
- metal, glass, wood, granite:	94 x 94 x 50 mm
Weight:	73 g (without frame)

- IDRT3-1 is a digital wall temperature controller used to regulate the temperature in a room.
- Using the IDRT3-1, it is possible to correct the given heating/cooling circuit within a range of ±3, ±4 or ±5 °C (optional in SW iDM3).
- The temperature controller is equipped with an integrated heat sensor used to measure the room temperature. It is also equipped with two analog digital inputs (AIN/DIN), which can be used to connect two potential free contacts or a single external temperature sensor TC/TZ (e.g. for measuring the fl oor temperature).
- The display shows the current temperature and after pressing one of two buttons under the display, you can control the desired temperature.
- Readability improves after pressing one of the buttons to activate the backlight.
- Heating/cooling circuit is assigned with a thermo-regulator using iDM3.
- In the case of temperature correction within ±3, ±4 or ± 5 °C, this change is valid until the next time mark within the time schedule established in iDM3.
- IDRT3 -1 in design LOGUS^{90} is intended for mounting into an installation box.

Connection

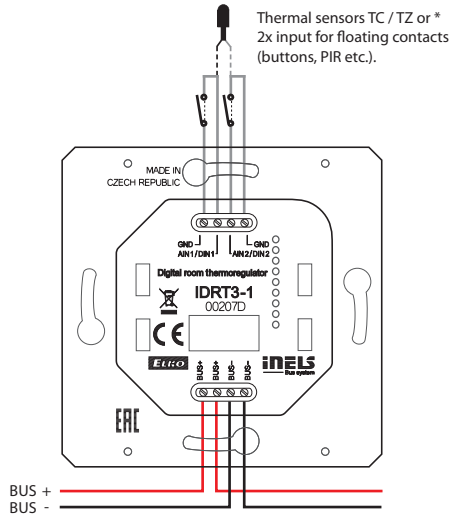

* The choice is made in iDM3 for each unit separately.